Gas Pipe Diagram Example

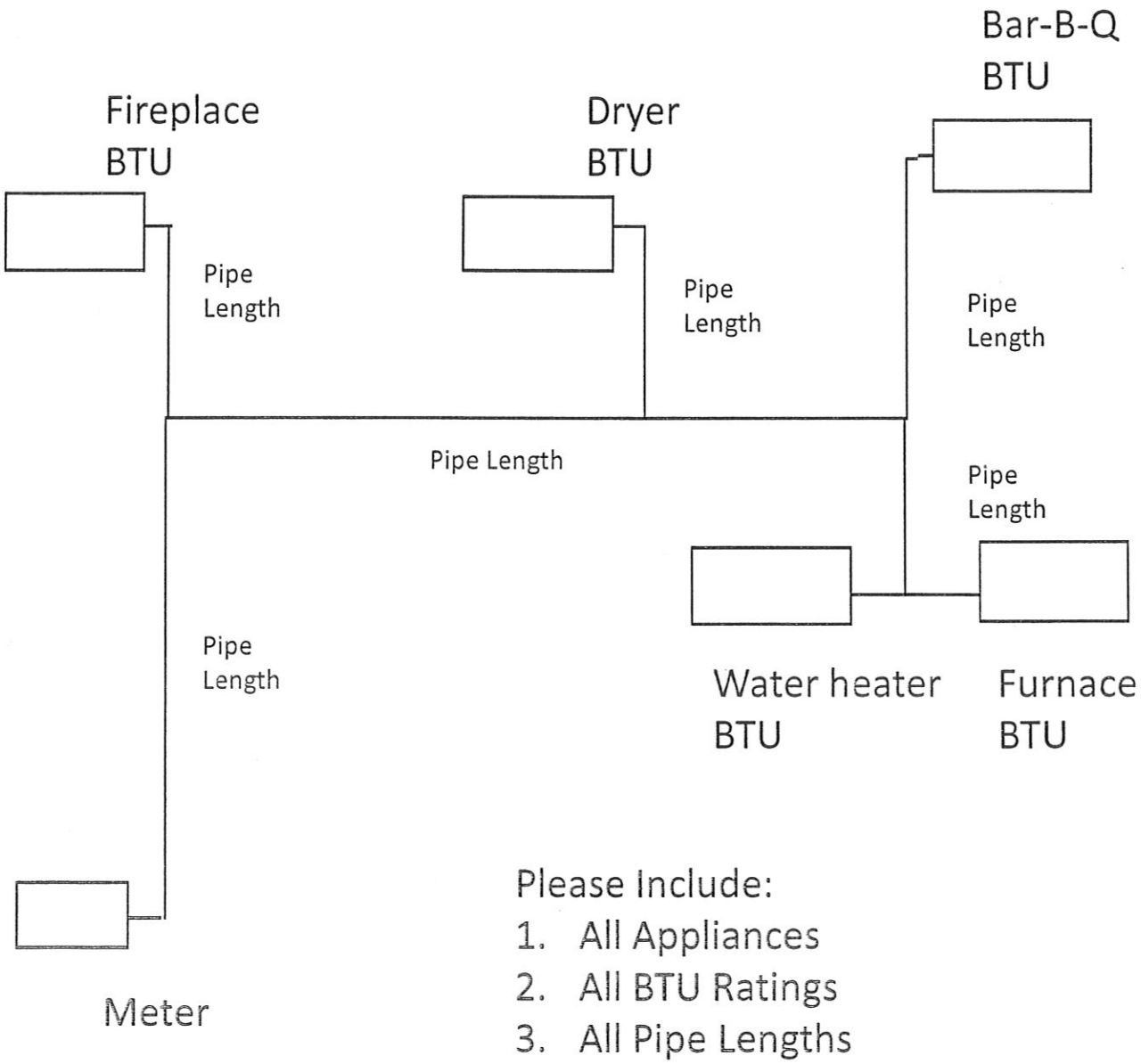

Please Include:

1. All Appliances
2. All BTU Ratings
3. All Pipe Lengths