E.7.1 - SECTIONALIZERS & SWITCHES
CONDUIT PLACEMENT FOR SECTIONALIZERS

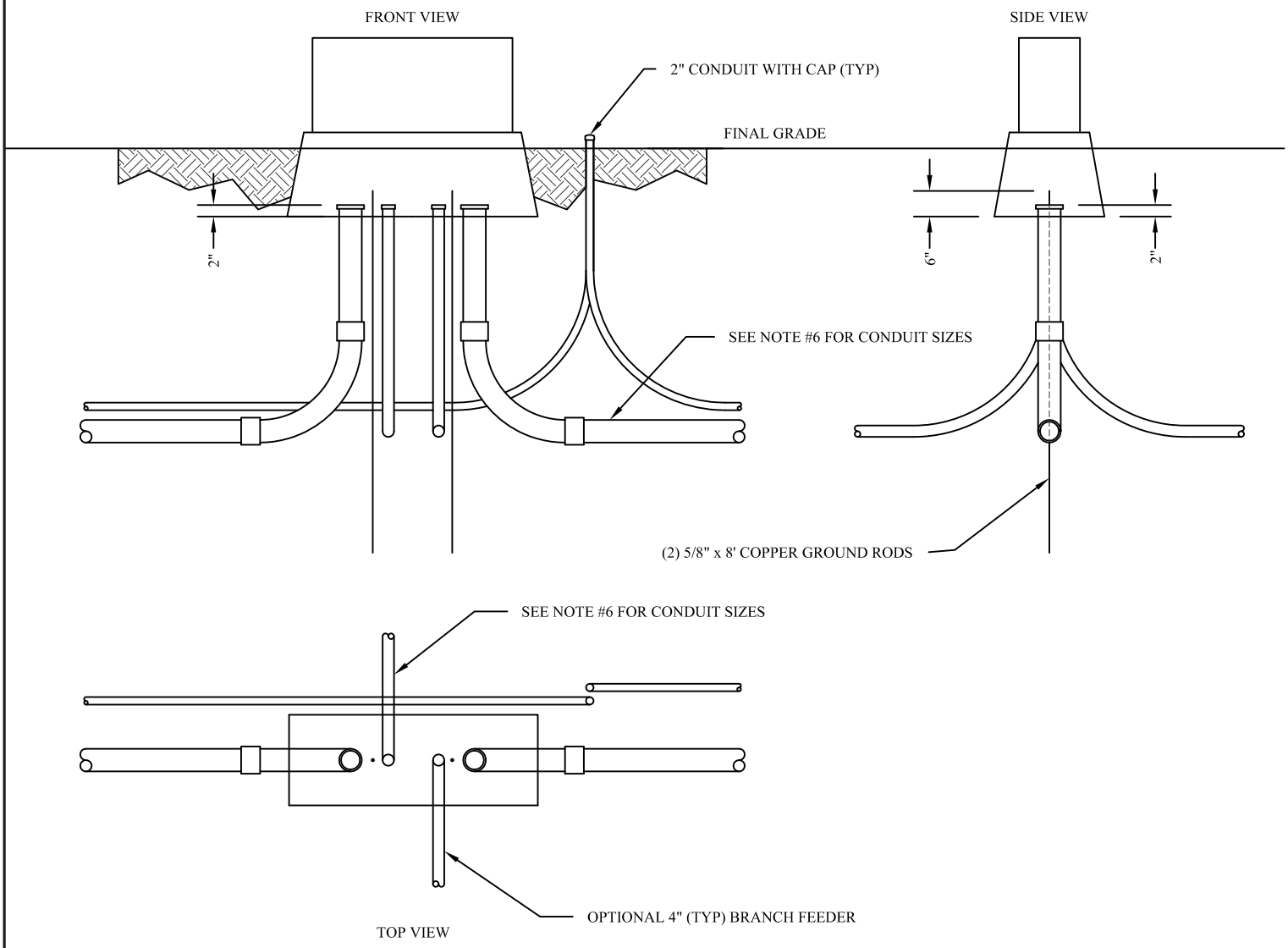

NOTES:

1. SEE SHEET E.12.2 FOR CONCRETE DETAILS.
2. ALL 90° ELBOWS 6" OR LARGER SHALL BE RIGID STEEL AND PVC WRAPPED.
3. JUNCTION BOXES AND BASE WILL BE PROVIDED BY LEHI CITY AND INSTALLED BY DEVELOPER.
4. THE DEVELOPER SHALL PROVIDE ALL GROUND RODS AND SUBSEQUENT MATERIALS TO COMPLETE THE INSTALLATION.
5. SEE SHEET E.11.1 FOR TYPICAL TRENCH CROSS SECTION DRAWING.
6. CONDUIT SIZES AND LOCATIONS WILL BE PROVIDED BY LEHI CITY ON THE SUBDIVISION ELECTRICAL PLANS.

LEHI
PIONEERING UTAH'S FUTURE

LEHI CITY
ELECTRICAL REQUIREMENTS
& STANDARDS MANUAL
SECTIONALIZERS & SWITCHES

ELECTRIC 7.1
SECTIONALIZERS & SWITCHES
SCALE: NONE
DATE: 7.22.06
REV: A
REV DATE: 7.22.06

E.7.2 - SECTIONALIZERS & SWITCHES
CONUITS ENCASED IN CONCRETE (TYP)

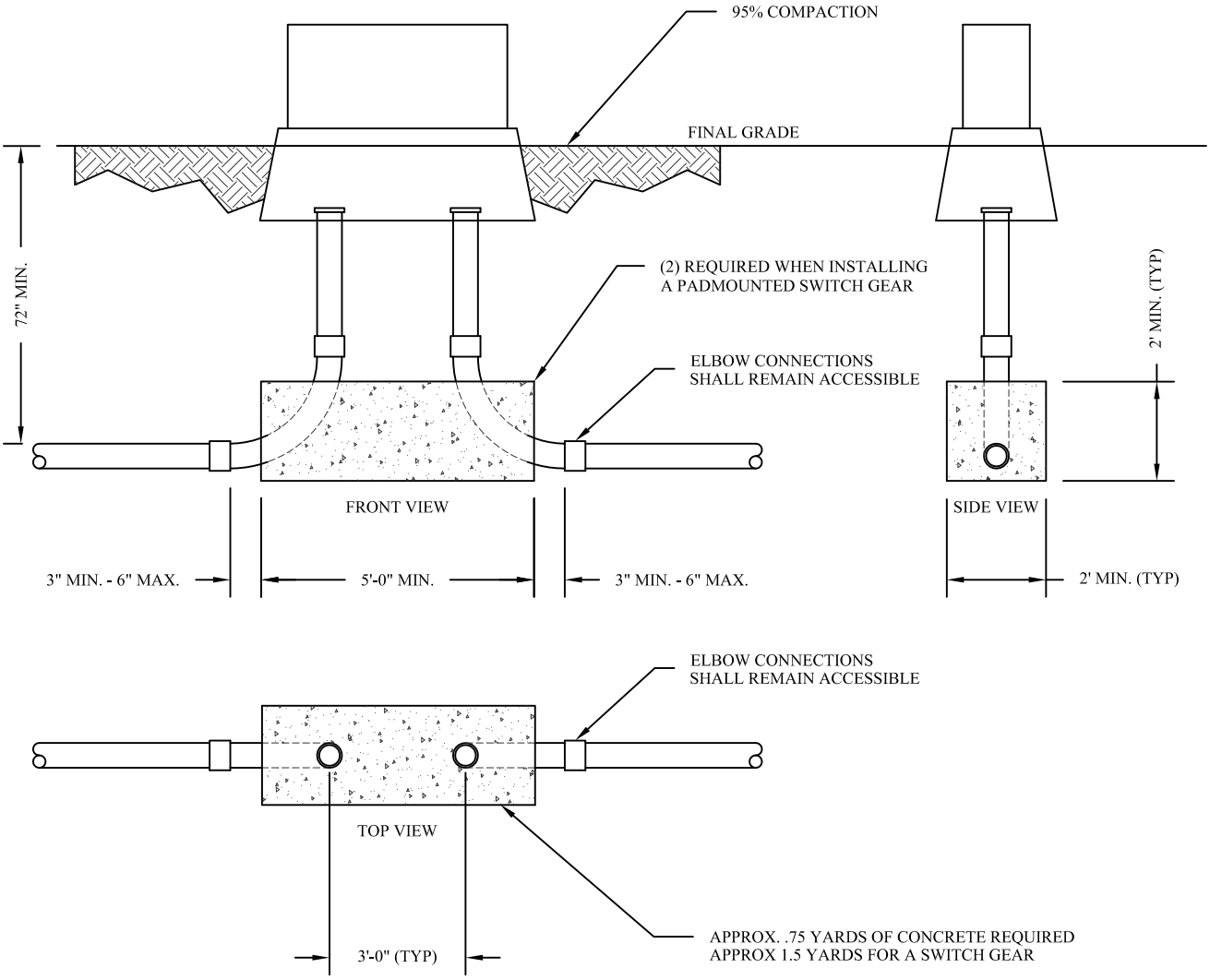

NOTES:

1. FOR CONCRETE SPECIFICATIONS REFERENCE SECTION #5 OF THE LEHI STANDARDS BOOK.
2. ALL 90° ELBOWS 6" OR LARGER SHALL BE RIGID STEEL AND PVC WRAPPED.
3. APPROX. 0.75 YARDS OF CONCRETE IS REQUIRED.
4. ELBOW CONNECTIONS SHALL BE ACCESSIBLE AFTER CONCRETE IS POURED.

LEHI
PIONEERING UTAH'S FUTURE

LEHI CITY
ELECTRICAL REQUIREMENTS
& STANDARDS MANUAL
SECTIONALIZERS & SWITCHES

ELECTRIC 7.2
SECTIONALIZERS & SWITCHES
SCALE: NONE
DATE: 7.22.06
REV: A
REV DATE: 7.22.06

E.7.3 - SECTIONALIZERS & SWITCHES
CONDUIT PLACEMENT FOR SWITCHES

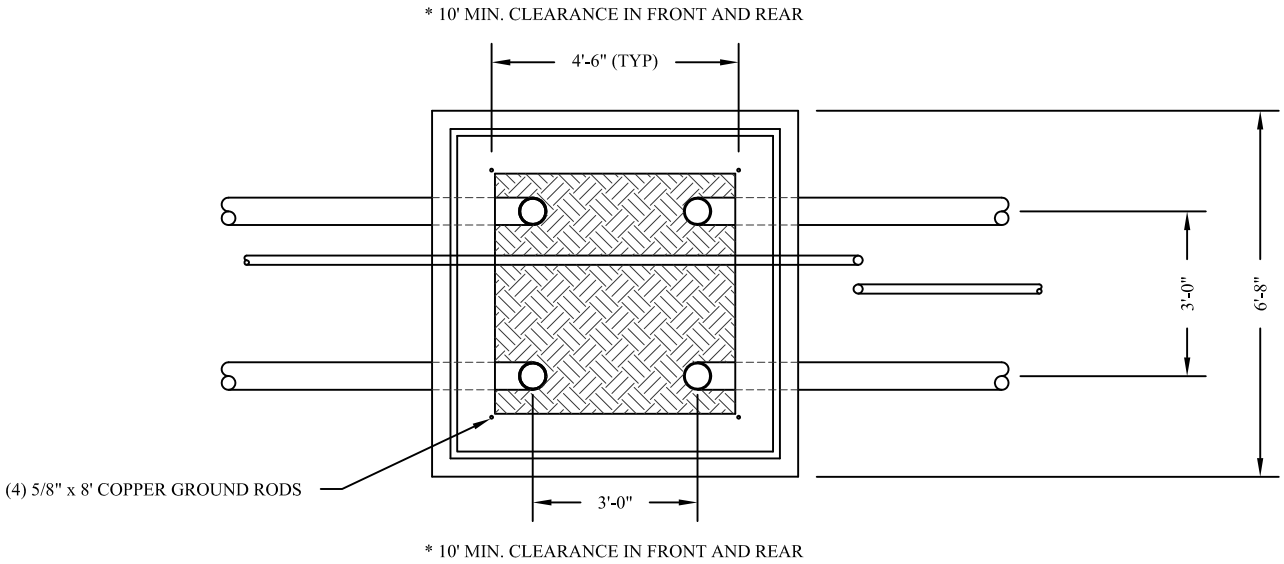

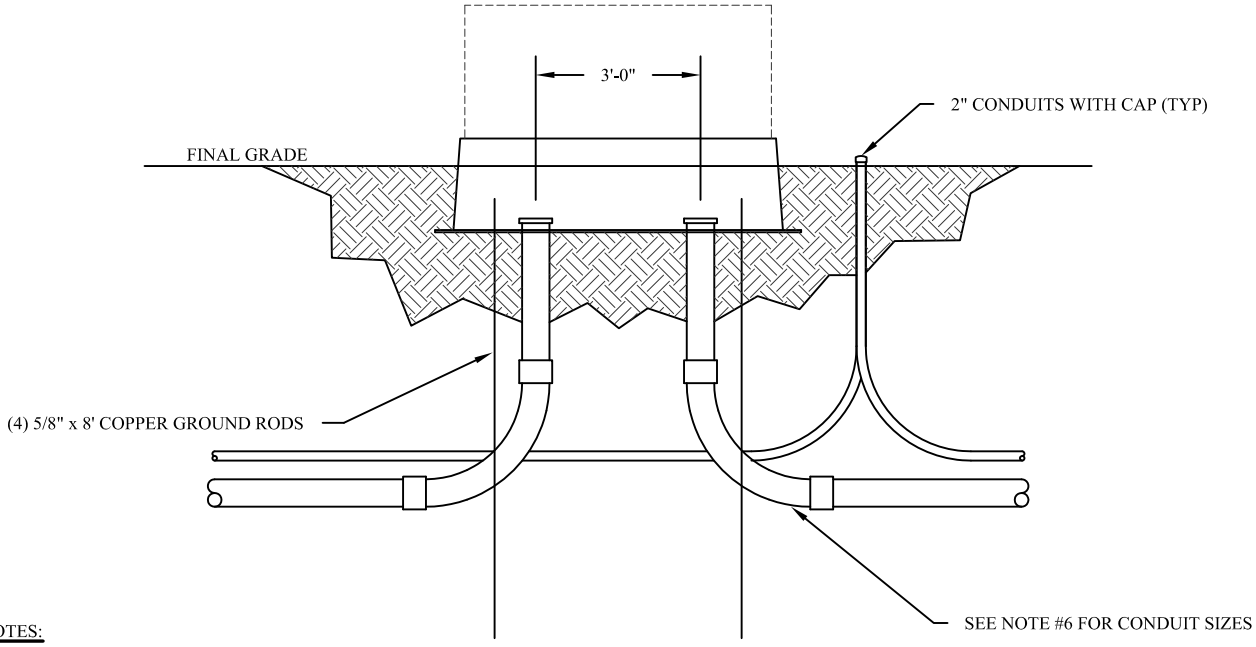

NOTES:

1. SEE SHEET E.7.2 FOR CONCRETE DETAILS.
2. ALL 90° ELBOWS 6" OR LARGER SHALL BE RIGID STEEL AND PVC WRAPPED.
3. SWITCHGEAR AND BASE WILL BE PROVIDED BY LEHI CITY AND INSTALLED BY DEVELOPER.
4. THE DEVELOPER SHALL PROVIDE ALL GROUND RODS AND SUBSEQUENT MATERIALS TO COMPLETE THE INSTALLATION.
5. SEE SHEET E.11.1 FOR TYPICAL TRENCH CROSS SECTION DRAWING.
6. CONDUIT SIZES AND LOCATIONS WILL BE PROVIDED BY LEHI CITY ON THE SUBDIVISION ELECTRICAL PLANS.