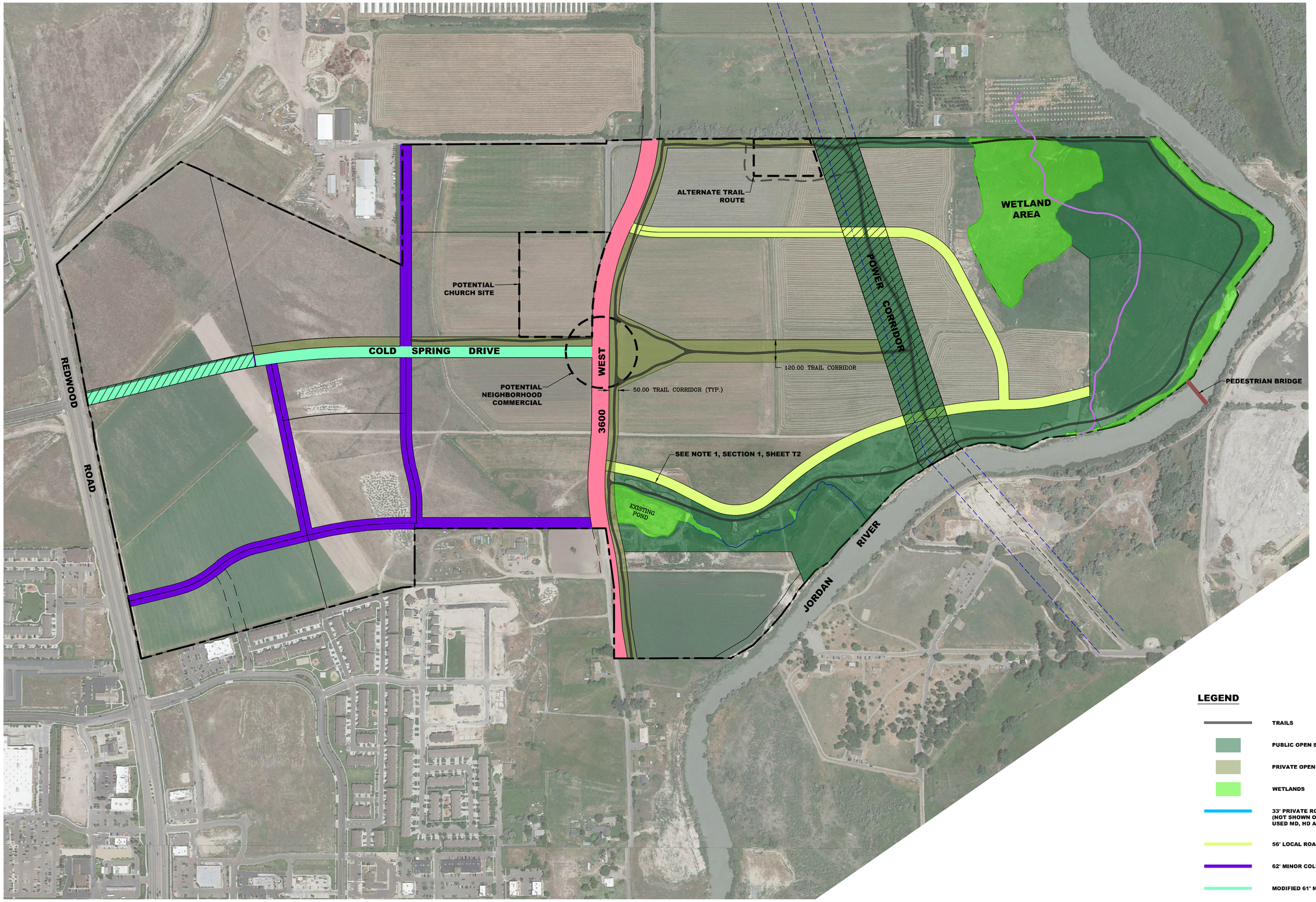

NORTH

SCALE: 1" = 250'

250 125 0 250

LEGEND

- TRAILS
- PUBLIC OPEN SPACE
- PRIVATE OPEN SPACE
- WETLANDS
- 33' PRIVATE ROAD (NOT SHOWN ON MAP, MAY BE USED MD, HD AND VHD AREAS)
- 56' LOCAL ROAD
- 62' MINOR COLLECTOR
- MODIFIED 61' MAJOR COLLECTOR ROAD - RESIDENTIAL
- 76' MAJOR COLLECTOR ROAD - COMMERCIAL
- 93' MAJOR ARTERIAL

NOTES:

1. PROJECT WILL MEET CITY CONNECTIVITY STANDARDS AND BE EVALUATED AT THE PRELIMINARY PLAT.
2. DEVELOPER TO COORDINATE WITH UDOT ON APPROVAL OF ACCESS TO REDWOOD ROAD.

LEI
- A Utah Corporation -
ENGINEERS
SURVEYORS
PLANNERS
3302 N. Main Street
Spanish Fork, UT 84660
Phone: 801.798.0555
Fax: 801.798.9393
office@lei-eng.com
www.lei-eng.com

NOT FOR CONSTRUCTION

COLD SPRING RANCH

LEHI, UTAH

TRANSPORTATION PLAN

REVISIONS
1 -
2 -
3 -
4 -
5 -

LEI PROJECT #: 2015-0125
DRAWN BY: BAP
CHECKED BY: BTG
SCALE: 1" = 250'
DATE: 1/11/2018

SHEET
T1

U:\0_LEI PROJECTS\2015\2015-0125 DR HORTON - ALLRED PROPERTY LEHI\CAD\15-0125 COMMUNITY PLAN EXHIBITS 2.DWG 1/11/2018 8:31 AM

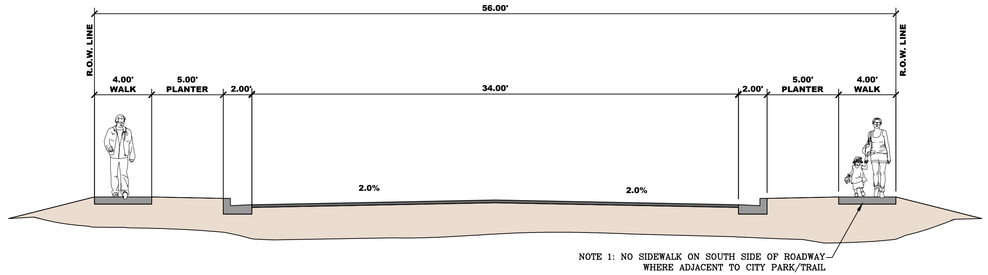

1 56' LOCAL ROAD CROSS SECTION

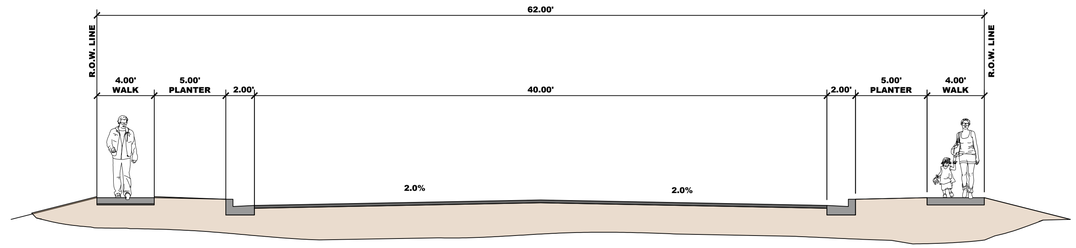

2 62' MINOR COLLECTOR CROSS SECTION

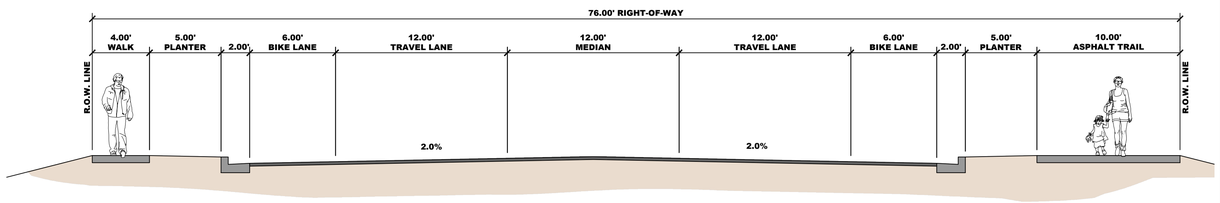

3 76' STREET CROSS SECTION (COLD SPRING DRIVE - COMMERCIAL)

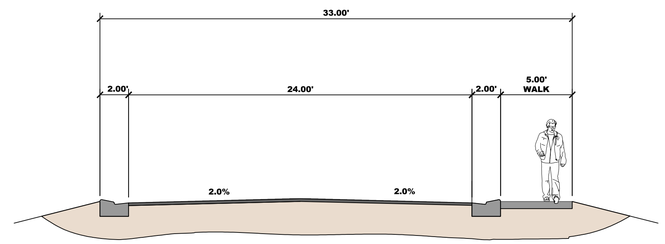

4 33' PRIVATE DR. CROSS SECTION

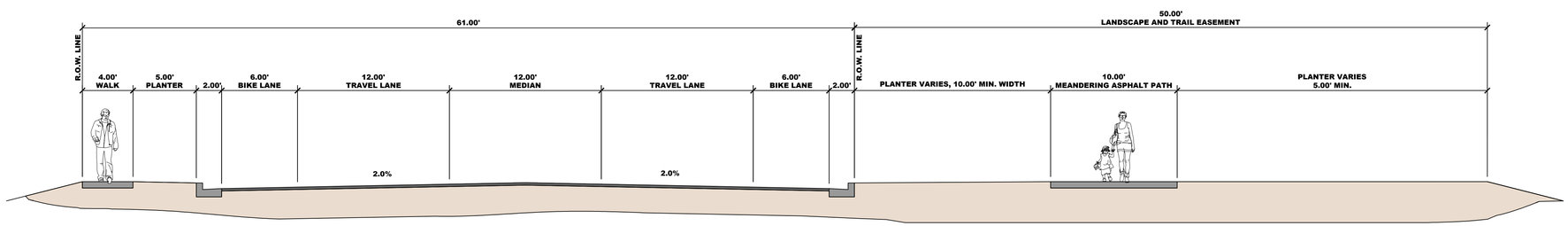

5 MODIFIED 61' STREET CROSS SECTION (COLD SPRING DRIVE - RESIDENTIAL)

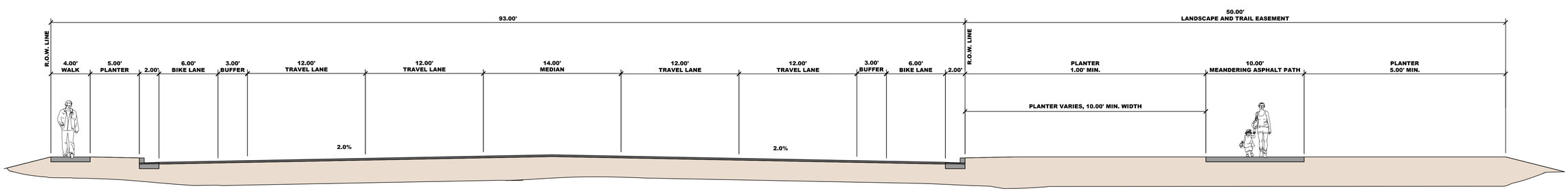

6 93' STREET CROSS SECTION (3600 WEST)

LEI
- A Utah Corporation -
ENGINEERS
SURVEYORS
PLANNERS
3302 N. Main Street
Spanish Fork, UT 84660
Phone: 801.798.0555
Fax: 801.798.9393
office@lei-eng.com
www.lei-eng.com

NOT FOR CONSTRUCTION

COLD SPRING RANCH
LEHI, UTAH

ROAD CROSS SECTIONS

REVISIONS
1 -
2 -
3 -
4 -
5 -

LEI PROJECT #: 2015-0125
DRAWN BY: BAP
CHECKED BY: BTG
SCALE: 1" = 5'
DATE: 11/30/2017

SHEET
T2

V:\0_LD PROJECTS\2015\2015-0125 DR HORTON - ALLRED PROPERTY LEHI\CAD\15-0125 COMMUNITY PLAN EXHIBITS.DWG 11/30/2017 3:39 PM

HALES ENGINEERING
innovative transportation solutions

Cold Spring Ranch

Traffic Impact Study

Lehi, Utah

August 2016

UT16-928

1220 North 500 West, Ste. 202 Lehi, UT 84043 p 801.766.4343
www.halesengineering.com

EXECUTIVE SUMMARY

This study addresses the traffic impacts associated with the proposed development located in Lehi, Utah. The proposed development is located on the east side of Redwood Road and west of the Jordan River, and north of 8750 North and south of 2100 North.

Included within the analyses for this study are the traffic operations and recommended mitigation measures for existing conditions and plus project conditions (conditions after development of the proposed project) at key intersections and roadways in the vicinity of the site. Future 2020 and 2040 conditions were also analyzed.

TRAFFIC ANALYSIS

The following is an outline of the traffic analysis performed by Hales Engineering for the traffic conditions of this project.

Existing (2016) Background Conditions Analysis

Weekday morning (7:00 to 9:00 a.m.) and evening (4:00 to 6:00 p.m.) peak period traffic counts were performed at the following intersections:

- Aspen Hills Boulevard / Redwood Road (SR-68)
- Sergeant Court Drive / Redwood Road (SR-68)
- Commerce Drive / Redwood Road (SR-68)
- Crossroads Boulevard / Redwood Road (SR-68)
- 400 East / Crossroads Boulevard
- 3600 West / 2100 North (eastbound)
- 3600 West / 2100 North (westbound)

The counts were performed on Wednesday, July 27, 2016. The morning peak hour was determined to be between 7:15 and 8:15 a.m. and the evening peak hour was determined to be between 4:45 and 5:45 p.m. The evening peak hour volumes were approximately 25 percent higher than the morning peak hour volumes. Therefore, the evening peak hour volumes were used in the analysis to represent the worst-case conditions. Detailed count data are included in Appendix A.

As shown in Table ES-1, all study intersections are performing at acceptable LOS during the evening peak hour except the Aspen Hills Drive / Redwood Road and Sergeant Court Drive / Redwood Road intersections. The intersection of Crossroads Boulevard / Redwood Road has

some queueing in the north- and southbound directions of approximately 350 and 530 feet respectively. No other queueing of significance was observed during the evening peak hour.

Project Conditions Analysis

The proposed land use for the development has been identified as follows:

- Shopping Center 673,000 sq. ft.
- Single Family Homes 667 Units
- Apartments 349 Units
- Townhomes 491 Units

The trip generation for the development of phase 1 is as follows:

- Daily Trips: 26,952
- Morning Peak Hour Trips: 966
- Evening Peak Hour Trips: 2,491

Existing (2016) Plus Project Conditions Analysis

As shown in Table ES-1, all study intersections are performing at acceptable LOS during the evening peak hour except Aspen Hills Drive / Redwood Road, Sergeant Court Drive / Redwood Drive, 2100 North / 3600 West eastbound and westbound. The intersection of Crossroads Boulevard / Redwood Road has some queueing in the north- and southbound directions of approximately 320 and 530 feet respectively. Aspen Hills Boulevard / Redwood Road is anticipated to have significant queueing in the east- and westbound directions of approximately 690 and 880 feet respectively. Sergeant Court Drive / Redwood Road is anticipated to have significant queueing in the east- and westbound directions of approximately 400 and 800 feet respectively. No other queueing of significance is anticipated during the evening peak hour.

Existing (2016) Plus Project Conditions Analysis – Mitigated

A signal was recommended at the Aspen Hills Boulevard / Redwood Road (SR-68) intersection, as well as dual left-turn lanes in the westbound direction. As shown in Table ES-1, with these mitigation measures, all study intersections are anticipated to perform at acceptable LOS except Sergeant Court Drive / Redwood Road and 3600 West / 2100 North. Some queueing is still anticipated at all intersections along Redwood Road in the north- and southbound directions.

Future (2020) Background Conditions Analysis

As shown in Table ES-1, all intersections are anticipated to perform at acceptable LOS except: Aspen Hills Boulevard / Redwood Road and Sergeant Court Drive / Redwood Road. The intersection of Crossroads Boulevard / Redwood Road has some queueing in the north-, east- and southbound directions of approximately 300, 220, and 560 feet respectively. The intersection of Commerce Drive / Redwood Road has some queueing in the north-, east-, and southbound directions of approximately 380, 260, and 550 feet respectively. Both Aspen Hills Boulevard and Sergeant Court Drive are anticipated to have some queueing in the eastbound direction of approximately 560, and 360 feet respectively where they intersect with Redwood Road. No other queueing of significance is anticipated during the evening peak hour.

Future (2020) Plus Project Conditions Analysis

As shown in Table ES-1, all intersections are anticipated to perform at acceptable LOS except: 400 East / Crossroads Boulevard and Sergeant Court Drive / Redwood Road. The intersection of Crossroads Boulevard / Redwood Road has some queueing in the north-, east-, and southbound directions of approximately 410, 260, and 1,000 feet respectively. The intersection of Commerce Drive / Redwood Road has some queueing in the north-, east-, and southbound directions of approximately 500, 260, and 600 feet respectively. Aspen Hills Boulevard / Redwood Road is anticipated to have some queueing in the north- and southbound directions of approximately 440, and 820 feet. 3600 West / 2100 North is anticipated to have some queueing in the southbound direction of approximately 710 feet. The intersection of 400 East / Crossroads Boulevard is anticipated to have approximately 480 feet of queueing in the southbound direction. No other queueing of significance is anticipated during the evening peak hour.

Future (2040) Background Conditions Analysis

As shown in Table ES-1, all intersections are anticipated to perform at acceptable LOS. The intersection of 3600 West / 2100 North is anticipated to have some queueing in the southbound direction of approximately 440 feet. No other queueing of significance is anticipated during the evening peak hour.

Future (2040) Plus Project Conditions Analysis

As shown in Table ES-1, all intersections are anticipated to perform at acceptable LOS except the Sergeant Court Drive / Redwood Road intersection. The intersection of 3600 West / 2100 North is anticipated to have some queueing in the southbound direction of approximately 480 feet. There is also some queueing anticipated at the intersection of Commerce Drive /

Redwood Road of approximately 350 feet in the northbound direction. No other queueing of significance is anticipated during the evening peak hour.

TABLE ES-1
Evening Peak Hour
Saratoga Springs - Cold Spring RanchTIS

Intersection	Existing 2016 Background	Existing 2016 Plus Project	Existing 2016 Plus Project - Mitigated	Future 2020 Background	Future 2020 Plus Project	Future 2040 Background	Future 2040 Plus Project
Description	LOS (Sec/Veh[1])	LOS (Sec/Veh[1])	LOS (Sec/Veh[1])	LOS (Sec/Veh[1])	LOS (Sec/Veh[1])	LOS (Sec/Veh[1])	LOS (Sec/Veh[1])
Crossroads Boulevard / Redwood Road	**D (35.2)**	**D (36.7)**	**C (37.7)**	**D (41.4)**	**D (51.9)**	**C (33.0)**	**C (33.7)**
Commerce Drive / Redwood Road	**C (23.3)**	**C (23.9)**	**C (27.4)**	**C (26.7)**	**C (30.3)**	**B (19.0)**	**C (22.4)**
Aspen Hills Boulevard / Redwood Road	**F (>50) / EB**	**F (>50) / EB**	**C (32.9)**	**F (>50) / EB**	**D (39.9)**	**D (28.2) / EB**	**B (18.8)**
Sergeant Court Drive / Redwood Road	**F (>50) / EB**	**F (>50) / EB**	**F (>50) / EB**	**F (>50) / EB**	**F (>50) / EB**	**D (31.0) / EB**	**F (>50) / EB**
3600 West / 2100 North WB	**D (26.3) / SB**	**E (46.9) / SB**	**E (41.1) / SB**	**C (23.5)**	**C (26.8)**	**C (24.4)**	**C (25.6)**
3600 West / 2100 North EB	**B (12.5) / SB**	**F (>50) / NB**	**D (32.4) / SB**	**C (29.5)**	**C (26.6)**	**C (28.0)**	**C (26.8)**
400 East / Crossroads Boulevard	**B (12.3) / SB**	**C (22.3) / SB**	**C (23.5) / SB**	**D (32.7) / SB**	**F (>50) / SB**	**A (9.9)**	**B (10.4)**

1. Intersection LOS and delay (seconds/vehicle) values represent the overall intersection average for roundabout, signalized, all-way stop controlled intersections and the worst approach for all other unsignalized intersections.
2. This intersection is a project access and was only analyzed in "plus project" scenarios.
3. This intersection was eliminated as part of the proposed project and was only analyzed in "background" scenarios.

Source: Hales Engineering, August 2016

RECOMMENDATIONS

Existing (2016) Background Conditions Analysis

Aspen Hills Boulevard / Redwood Road and Sergeant Court Drive / Redwood Road are anticipated to perform at an unacceptable LOS, however, no mitigation measures are recommended. It is not uncommon for small side streets on major arterials to perform poorly during the peak hours. A few measures that could be considered to mitigate the issues are discussed below.

A signal at the Aspen Hills Boulevard intersection would improve the LOS on the side street, however, a signal at this location would not meet the minimum signal spacing of a category 5 UDOT roadway. It is also unlikely that the signal would meet warrants (without the project). Lastly, this location is not included on the Lehi or Saratoga Springs Cities Transportation Master Plans or UDOTs Access Control Plan Corridor Agreement.

Another measure that could be considered is a right-in right-out or 3/4 access. These types of accesses limit the movements vehicles can make causing them to re-route. This may also not be the best solution since there isn't a great way for drivers to reroute, especially for the Sergeant Court Drive / Redwood Road (SR-68) intersection. Additionally, it is anticipated that both Aspen Hills Boulevard and Sergeant Court Drive will perform poorly only during the peak hours. The remaining hours of the day, these accesses are anticipated to operate better.

Existing (2016) Plus Project Conditions Analysis

The two proposed accesses onto Redwood Road are anticipated to perform at poor LOS. It is recommended that a traffic signal be constructed at the intersection of Aspen Hills Boulevard. This signal is not a part of either Lehi or Saratoga Springs Transportation Master Plan. It is also not part of UDOT's Redwood Road Corridor Agreement and does not meet the access spacing requirements. However, the accesses to the proposed commercial portion of the development will not function adequately without a signal.

It is also recommended that dual left-turn lanes be constructed in the westbound direction turning on to Redwood Road. This movement does not typically warrant dual left-turn lanes with the typical capacity analysis guidelines, however, the dual left-turn recommendation is based on minimizing the green time that is given to this movement. It is also recommended that right-turn deceleration and acceleration lanes be constructed in the northbound direction at the intersections of Sergeant Court Drive / Redwood Road and Aspen Hills Boulevard / Redwood Road, as required by Administrative Rule R930-6.

The intersections on 2100 North / 3600 West are also anticipated to perform poorly. The volumes at these intersections are not anticipated to meet signal warrants in 2016, however, it is recommended that a signal be constructed at this location when signal warrants are met.

Existing (2016) Plus Project Conditions Analysis - Mitigated

No new mitigation measures are recommended at this time.

Future (2020) Background Conditions Analysis

Aspen Hills Boulevard / Redwood Road and Sergeant Court Drive / Redwood Road are anticipated to perform at an unacceptable LOS, however, no mitigation measures are recommended. It is not uncommon for small side streets on major arterials to perform poorly during the peak hours. A few measures that could be considered to mitigate the issues have been discussed previously.

In a previous study by Hales Engineering, it was recommended that Redwood Road be widened to be able to accommodate the peak future demand.

Future (2020) Plus Project Conditions Analysis

The intersection of 400 East / Crossroads Boulevard is anticipated to perform poorly. There are plans to put a signal at this location, and is recommended that it be constructed when warrants are met. No additional mitigation measures are recommended at this time.

Future (2040) Background Conditions Analysis

No mitigation measures are recommended at this time.

Future (2040) Plus Project Conditions Analysis

No new mitigation measures are recommended at this time. Sergeant Court Drive / Redwood Road is anticipated to perform at an unacceptable LOS. It is not uncommon for small side streets on major arterials to perform poorly during the peak hours. A few measures that could be considered to mitigate the issues have been discussed in previous chapters.

SUMMARY OF KEY FINDINGS/RECOMMENDATIONS

The following is a summary of key findings and recommendations:

- The study intersections currently operate at an acceptable LOS during the evening peak hour except: Sergeant Court Drive / Redwood Road and Aspen Hills Boulevard / Redwood Road. The following mitigation measures could be considered:
    - Signalize the Aspen Hills Boulevard / Redwood Road (SR-68) intersection
    - Turn the intersections into RIROs or ¾ Accesses
- The development will consist of approximately 673,000 square feet of retail space and up to 1,138 residential units.
- All study intersections are anticipated to operate at acceptable LOS during the evening peak hour with project traffic added except: Sergeant Court Drive / Redwood Road, Aspen Hills Boulevard / Redwood Road, and the intersections of 3600 West / 2100 North eastbound and westbound. The following is recommended:
    - A signal be built at Aspen Hills Boulevard / Redwood Road
    - Dual left-turn lanes be constructed in the westbound direction at Aspen Hills Boulevard / Redwood Road intersection.
    - The Aspen Hills Boulevard / Redwood Road intersection in the westbound direction have a dedicated though lane and right-turn pocket
    - Right-turn deceleration and acceleration pockets be constructed in the northbound direction at the intersections of Sergeant Court Drive / Redwood Road and Aspen Hills Boulevard / Redwood Road as required by Administrative Rule R930-6
- A mitigated scenario was completed based on the mitigation measures for the 2016 plus project conditions. It was found that all study intersections are anticipated to perform at acceptable LOS except: Sergeant Court Drive / Redwood Road and 3600 West / 2100 North Eastbound.
- By the year 2020, it was assumed that the intersection of 3600 West / 2100 North would become signalized.
- In the future 2020 background conditions Sergeant Court Drive / Redwood Road and Aspen Hills Boulevard / Redwood Road are anticipated to perform poorly. No new mitigation measures are recommended.
- In the future 2020 Plus Project conditions, Sergeant Court Drive / Redwood Road, and 400 East / Crossroads Boulevard are anticipated to perform poorly. No additional mitigation measures are recommended.
- By the year 2040, it is anticipated that Mountain View Corridor will be built and 2100 North will have a freeway. It was also anticipated that 400 East / Crossroads Boulevard would be signalized. This will help to reduce traffic demand on Redwood Road.

- With the anticipated improvements, all study intersections are anticipated to perform at acceptable LOS.

HALES ENGINEERING
innovative transportation solutions

TABLE OF CONTENTS

EXECUTIVE SUMMARY i

TRAFFIC ANALYSIS i
RECOMMENDATIONS vi
SUMMARY OF KEY FINDINGS/RECOMMENDATIONS viii

TABLE OF CONTENTS x

LIST OF TABLES xii

LIST OF FIGURES xii

I. INTRODUCTION 1

A. Purpose 1
B. Scope 2
C. Analysis Methodology 2
D. Level of Service Standards 2

II. EXISTING (2016) BACKGROUND CONDITIONS 5

A. Purpose 5
B. Roadway System 5
C. Traffic Volumes 6
D. Level of Service Analysis 6
E. Queuing Analysis 6
F. Mitigation Measures 9

III. PROJECT CONDITIONS 11

A. Purpose 11
B. Project Description 11
C. Trip Generation 11
D. Trip Reductions 13
E. Trip Distribution and Assignment 13
F. Access 18
G. Auxiliary Lane Requirements 18

IV. EXISTING (2016) PLUS PROJECT CONDITIONS 20

A. Purpose 20
B. Traffic Volumes 20
C. Level of Service Analysis 20
D. Queuing Analysis 20
E. Mitigation Measures 23

V. FUTURE (2020) BACKGROUND CONDITIONS 26

A. Purpose 26
B. Roadway Network 26
C. Traffic Volumes 26
D. Level of Service Analysis 29
E. Queuing Analysis 29

F. Mitigation Measures 30

VI. FUTURE (2020) PLUS PROJECT CONDITIONS 31

A. Purpose 31
B. Traffic Volumes 31
C. Level of Service Analysis 31
D. Queuing Analysis 31
E. Mitigation Measures 34

VII. FUTURE (2040) BACKGROUND CONDITIONS 35

A. Purpose 35
B. Roadway Network 35
C. Traffic Volumes 35
D. Level of Service Analysis 38
E. Queuing Analysis 38
F. Mitigation Measures 39

VIII. FUTURE (2040) PLUS PROJECT CONDITIONS 40

A. Purpose 40
B. Traffic Volumes 40
C. Level of Service Analysis 40
D. Queuing Analysis 43
E. Mitigation Measures 43

Appendix A: Turning Movement Counts
Appendix B: LOS Results
Appendix C: Project Site Plan
Appendix D: Queuing Results
Appendix E: Internal Capture Reduction Calculations

LIST OF TABLES

Table 1 Level of Service Description 3
Table 2 Background (2016) Evening Peak Hour Level of Service 9
Table 3 Trip Generation 12
Table 4 Existing (2016) Plus Project Evening Peak Hour Level of Service 23
Table 5 Existing (2016) Plus Project Evening Peak Hour Level of Service - Mitigated 25
Table 6 Future (2020) Background Evening Peak Hour Level of Service 29
Table 7 Future (2020) Plus Project Evening Peak Hour Level of Service 34
Table 8 Future (2040) Background Evening Peak Hour Level of Service 38
Table 9 Future (2040) Plus Project Evening Peak Hour Level of Service 43

LIST OF FIGURES

Figure 1 Vicinity map showing the project location in Lehi, Utah 1
Figure 2 LOS letter designation 4
Figure 3 Existing (2016) background evening peak hour traffic volumes. 7
Figure 4 Existing (2016) background evening peak hour traffic volumes 8
Figure 5 Trip assignment for the evening peak hour in year 2016 & 2020. 14
Figure 6 Trip assignment for the evening peak hour in year 2016 & 2020. 15
Figure 7 Trip assignment for the evening peak hour in year 2040. 16
Figure 8 Trip assignment for the evening peak hour in year 2040. 17
Figure 9 Existing (2016) plus project evening peak hour traffic volumes. 21
Figure 10 Existing (2016) plus project evening peak hour traffic volumes. 22
Figure 11 Future (2020) background evening peak hour volumes. 27
Figure 12 Future (2020) background evening peak hour volumes. 28
Figure 13 Future (2020) plus project evening peak hour volumes. 32
Figure 14 Future (2020) plus project evening peak hour volumes. 33
Figure 15 Future (2040) background evening peak hour volumes. 36
Figure 16 Future (2040) background evening peak hour volumes. 37
Figure 17 Future (2040) plus project evening peak hour volumes. 41
Figure 18 Future (2040) plus project evening peak hour volumes. 42

I. INTRODUCTION

A. Purpose

This study addresses the traffic impacts associated with the proposed development located in Lehi, Utah. The proposed development is located on the east side of Redwood Road and west of the Jordan River, and north of 8750 North and south of 2100 North.

Included within the analyses for this study are the traffic operations and recommended mitigation measures for existing conditions and plus project conditions (conditions after development of the proposed project) at key intersections and roadways in the vicinity of the site. Future 2020 and 2040 conditions were also analyzed.

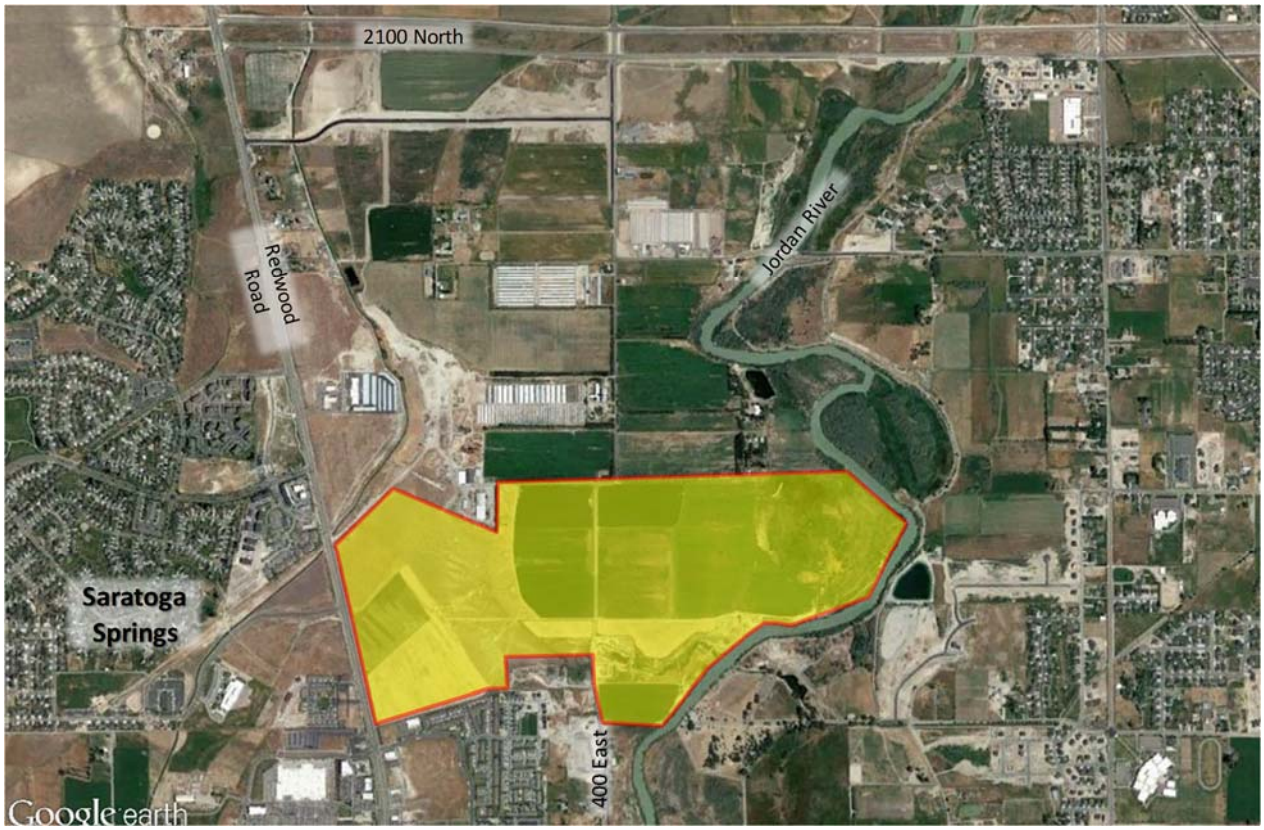

Figure 1 Vicinity map showing the project location in Lehi, Utah

B. Scope

The study area was defined based on conversations with the development team. This study was scoped to evaluate the traffic operational performance impacts of the project on the following intersections:

- Aspen Hills Boulevard / Redwood Road
- Sergeant Court Drive / Redwood Road
- Commerce Drive / Redwood Road
- Crossroads Boulevard / Redwood Road
- 400 East / Crossroads Boulevard
- 3600 West / 2100 North (eastbound)
- 3600 West / 2100 North (westbound)

C. Analysis Methodology

Level of service (LOS) is a term that describes the operating performance of an intersection or roadway. LOS is measured quantitatively and reported on a scale from A to F, with A representing the best performance and F the worst. Table 1 provides a brief description of each LOS letter designation and an accompanying average delay per vehicle for both signalized and unsignalized intersections. Figure 2 provides a visual representation of each LOS letter designation.

The Highway Capacity Manual 2010 (HCM 2010) methodology was used in this study to remain consistent with “state-of-the-practice” professional standards. This methodology has different quantitative evaluations for signalized and unsignalized intersections. For signalized and all-way stop intersections, the LOS is provided for the overall intersection (weighted average of all approach delays). For all other unsignalized intersections LOS is reported based on the worst approach.

D. Level of Service Standards

For the purposes of this study, a minimum overall intersection performance for each of the study intersections was set at LOS D. However, if LOS E or F conditions exist, an explanation and/or mitigation measures will be presented. An LOS D threshold is consistent with “state-of-the-practice” traffic engineering principles for urbanized areas.

Table 1 Level of Service Description

Level of Service	Description of Traffic Conditions	Average Delay (seconds/vehicle)
	Signalized Intersections	**Overall Intersection**
A	Extremely favorable progression and a very low level of control delay. Individual users are virtually unaffected by others in the traffic stream.	0 ≤ 10.0
B	Good progression and a low level of control delay. The presence of other users in the traffic stream becomes noticeable.	> 10.0 and ≤ 20.0
C	Fair progression and a moderate level of control delay. The operation of individual users becomes somewhat affected by interactions with others in the traffic stream.	>20.0 and ≤ 35.0
D	Marginal progression with relatively high levels of control delay. Operating conditions are noticeably more constrained.	> 35.0 and ≤ 55.0
E	Poor progression with unacceptably high levels of control delay. Operating conditions are at or near capacity.	> 55.0 and ≤ 80.0
F	Unacceptable progression with forced or breakdown operating conditions.	> 80.0
	Unsignalized Intersections	**Worst Approach**
A	Free Flow / Insignificant Delay	0 ≤ 10.0
B	Stable Operations / Minimum Delays	>10.0 and ≤ 15.0
C	Stable Operations / Acceptable Delays	>15.0 and ≤ 25.0
D	Approaching Unstable Flows / Tolerable Delays	>25.0 and ≤ 35.0
E	Unstable Operations / Significant Delays Can Occur	>35.0 and ≤ 50.0
F	Forced Flows / Unpredictable Flows / Excessive Delays Occur	> 50.0

Source: Hales Engineering Descriptions, based on Highway Capacity Manual, 2010 Methodology (Transportation Research Board, 2010)

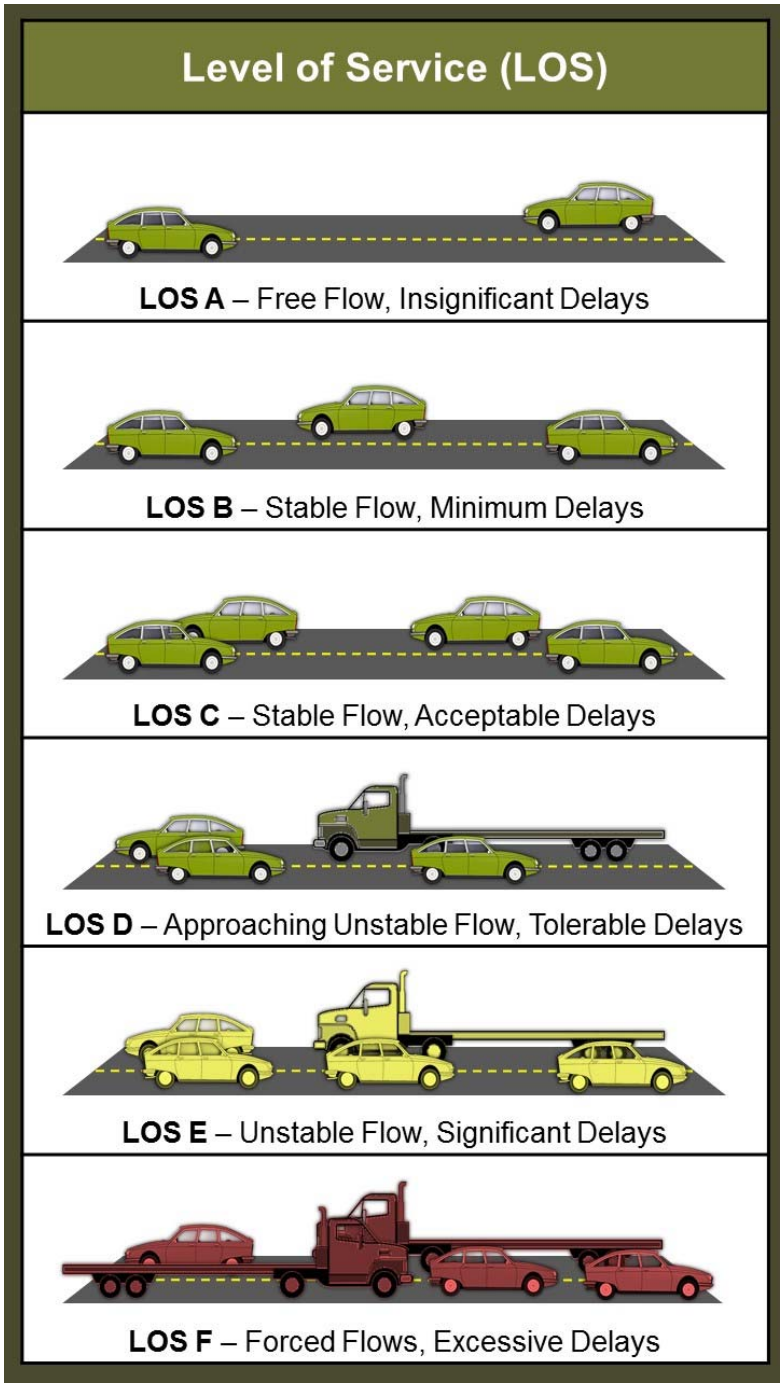

Figure 2 LOS letter designation

II. EXISTING (2016) BACKGROUND CONDITIONS

A. Purpose

The purpose of the background analysis is to study the intersections and roadways during the peak travel periods of the day with background traffic and geometric conditions. Through this analysis, background traffic operational deficiencies can be identified and potential mitigation measures recommended. This analysis will provide a baseline condition that may be compared to the build conditions to identify the impacts of the development.

B. Roadway System

The primary roadways that will provide access to the project site are described below:

Redwood Road (SR-68) – Redwood Road (SR-68) is a state-maintained roadway that is classified by UDOT as a "principal arterial". There are three different categorizations with in the study area. From Crossroads Boulevard to North Commerce Drive, Redwood Road is a category 6 roadway. From North Commerce Drive to approximately 2200 North, Redwood Road is a category 5 and from 2200 North to 2100 North a category 4 roadway. As an Access Category 6 (System priority-urban importance) roadway, the minimum signal spacing on Redwood Road is 1,320 feet, minimum street spacing of 350 feet, and a minimum access spacing of 200 feet. As an Access Category 5 and 4 roadways, the minimum signal spacing on Redwood Road is 2,640 feet, minimum street spacing of 660 feet, and a minimum access spacing is 350 and 500 feet respectively. Redwood Road has two lanes in each direction with a center turn lane and the posted speed limit is 45 mph in the study area.

2100 North (SR-85) – is a state maintained roadway and is classified by UDOT as a Principle Arterial and categorized as an Access Category 10 (Freeway one-way Frontage Road). The minimum signal spacing on 2100 North (SR-85) is 1,320 feet and minimum street spacing of 660 feet. 2100 North (SR-85) has two lanes in each direction with a center median of approximately 300 feet and the posted speed limit is 50 mph adjacent to the study area. It is planned that the center median will eventually be turned into a freeway.

Crossroads Boulevard– is a city maintained roadway and is classified by the Transportation Master Plan as a Major Arterial. Currently, this roadway has a single lane in each direction with no center median at the intersection with 400 east. At the intersections with Redwood Road, Crossroads Boulevard has 3 lanes in each direction with a center raised median. The posted speed limit is 40 mph in the study area.

C. Traffic Volumes

Weekday morning (7:00 to 9:00 a.m.), and evening (4:00 to 6:00 p.m.) peak period traffic counts were performed at the following intersection:

- Aspen Hills Boulevard / Redwood Road
- Sergeant Court Drive / Redwood Road
- Commerce Drive / Redwood Road
- Crossroads Boulevard / Redwood Road
- 400 East / Crossroads Boulevard
- 3600 West / 2100 North (eastbound)
- 3600 West / 2100 North (westbound)

The counts were performed on Wednesday, July 27, 2016. The morning peak hour was determined to be between 7:15 and 8:15 a.m. and the evening peak hour was determined to be between 4:45 and 5:45 p.m. The evening peak hour volumes were approximately 25 percent higher than the morning peak hour volumes. Therefore, the evening peak hour volumes were used in the analysis to represent the worst-case conditions. Detailed count data are included in Appendix A.

Figure 3 and Figure 4 shows the existing evening peak hour volume as well as intersection geometry at the study intersections.

D. Level of Service Analysis

Using Synchro/SimTraffic, which follow the Highway Capacity Manual (HCM) 2010 methodology introduced in Chapter I, the evening peak hour LOS was computed for each study intersection. The results of this analysis are reported in Table 2 (see Appendix B for the detailed LOS reports). Multiple runs of SimTraffic were used to provide a statistical evaluation of the interaction between the intersections. These results serve as a baseline condition for the impact analysis of the proposed development during existing (2016) conditions. As shown in Table 2, all study intersections are performing at acceptable LOS during the evening peak hour except Aspen Hills Drive / Redwood Road and Sergeant Court Drive / Redwood Road.

E. Queuing Analysis

Hales Engineering calculated the 95th percentile queue lengths for each of the study intersections. The queue reports can be found in Appendix D. The intersection of Crossroads Boulevard / Redwood Road has some queueing in the north- and southbound directions of approximately 350 and 530 feet respectively. No other queueing of significance was observed during the evening peak hour.

Saratoga Springs - Cold Spring Ranch
Existing (2016) Background

Evening Peak Hour
Figure 3a

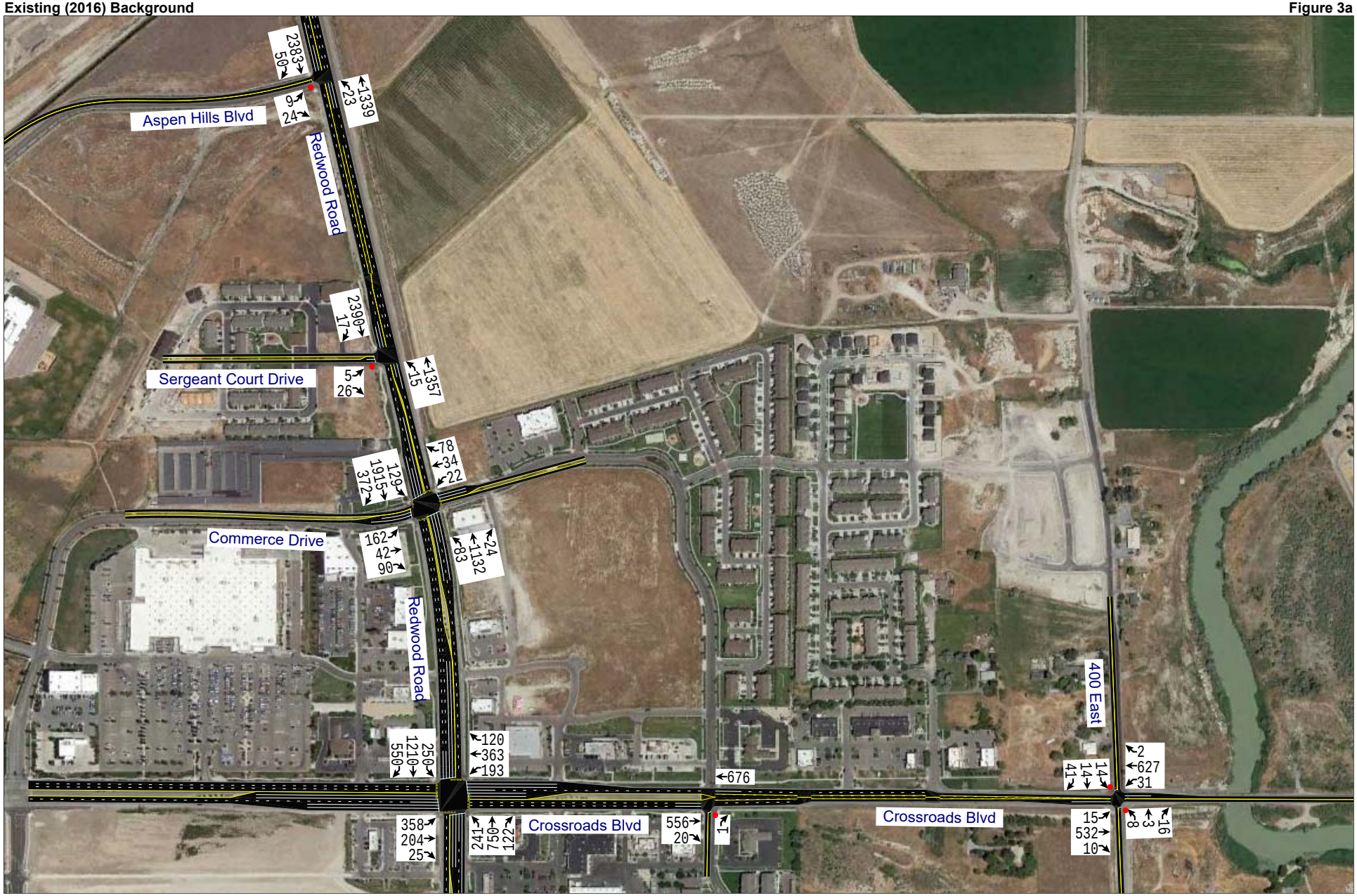

Hales Engineering
1220 North 500 West, Ste. 202 Lehi, Utah 84043

801.766.4343
8/23/2016

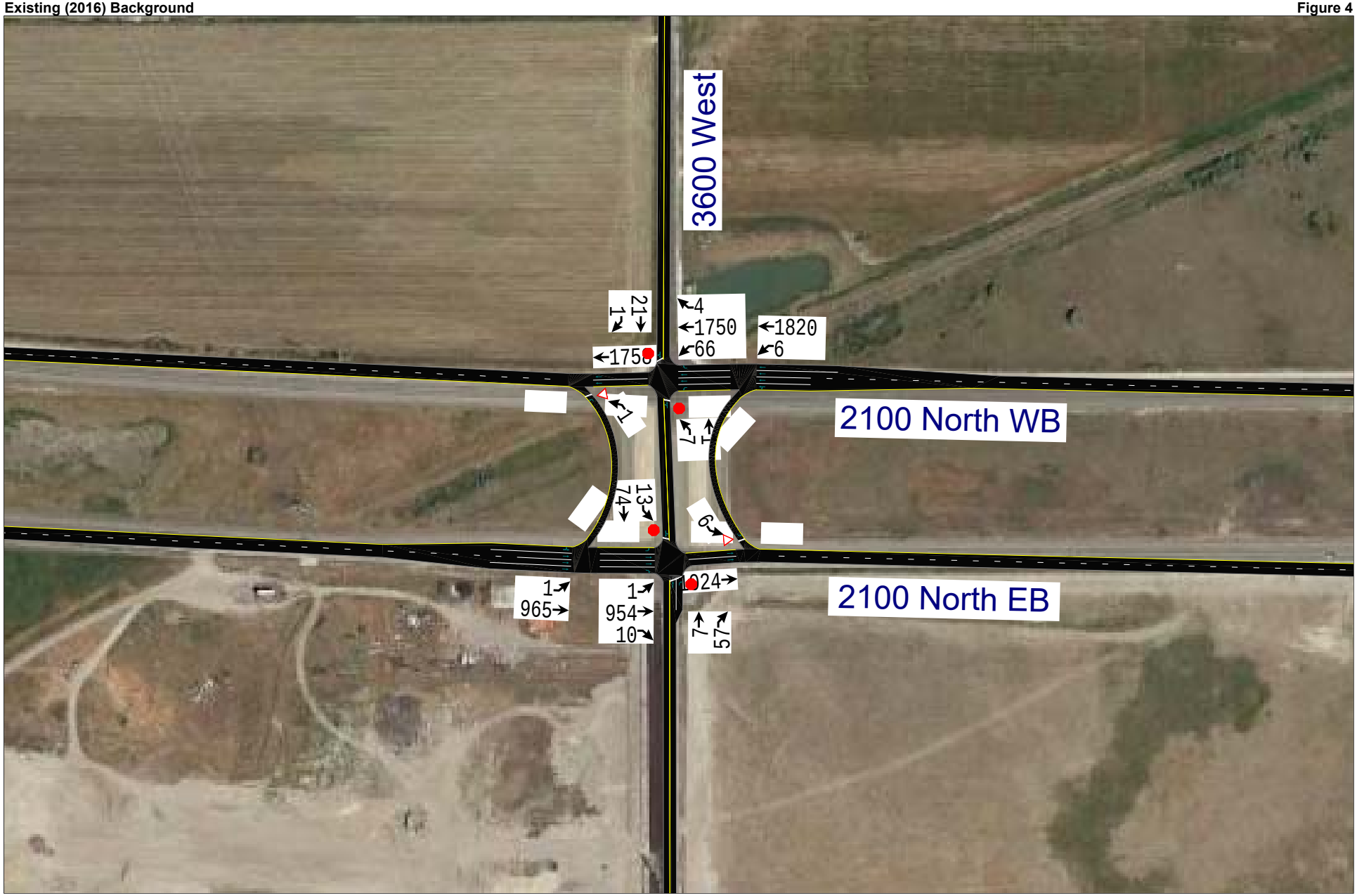
3600 West
2100 North WB
2100 North EB
21
1
1750
4
1750
66
1820
6
1
7
1
13
74
6
1
965
1
954
10
024
7
57

Table 2 Background (2016) Evening Peak Hour Level of Service

Intersection		Worst Approach			Overall Intersection	
Description	Control	Approach[1,3]	Aver. Delay (Sec/Veh)[1]	LOS[1]	Aver. Delay (Sec/Veh)[2]	LOS[2]
Crossroads Boulevard / Redwood Road	Signal	-	-	-	35.2	D
Commerce Drive / Redwood Road	Signal	-	-	-	23.3	C
Aspen Hills Boulevard / Redwood Road	EB Stop	EB	> 50	F	-	-
Sergeant Court Drive / Redwood Road	EB Stop	EB	> 50	F	-	-
3600 West / 2100 North WB	NB/SB Stop	SB	26.3	D	-	-
3600 West / 2100 North EB	NB/SB Stop	SB	12.5	B	-	-
400 East / Crossroads Boulevard	NB/SB Stop	SB	12.3	B	-	-

1. This represents the worst approach LOS and delay (seconds / vehicle) and is only reported for non-all-way stop unsignalized intersections.
2. This represents the overall intersection LOS and delay (seconds / vehicle) and is reported for all-way stop and signal controlled intersections.
3. SB = Southbound approach, etc.

Source: Hales Engineering, August 2016

F. Mitigation Measures

Aspen Hills Boulevard / Redwood Road and Sergeant Court Drive / Redwood Road are anticipated to perform at an unacceptable LOS, however no mitigation measures are recommended. It is not uncommon for small side streets on major arterials to perform poorly during the peak hours. A few measures that could be considered to mitigate the issues are discussed below.

A signal at the Aspen Hills Boulevard intersection would improve the LOS on the side street, however, a signal at this location would not meet the minimum signal spacing of a category 5 UDOT roadway. It is also unlikely that the signal would meet warrants (without the project). Lastly, this location is not included on the Saratoga Springs or Lehi Cities Transportation Master Plans or UDOTs Access Control Plan Corridor Agreement.

Another measure that could be considered is a right-in right-out or 3/4 access. These types of accesses limit the movements vehicles can make causing them to re-route. This may also not be the best solution since there isn't a great way for drivers to reroute, especially for the Sergeant

Court Drive / Redwood Road (SR-68) intersection. Additionally, it is anticipated that both Aspen Hills Boulevard and Sergeant Court Drive will perform poorly only during the peak hours. The remaining hours of the day, these accesses are anticipated to operate better.

III. PROJECT CONDITIONS

A. Purpose

The project conditions analysis explains the type and intensity of development. This provides the basis for trip generation, distribution, and assignment of project trips to the surrounding study intersections defined in the Introduction.

B. Project Description

This study addresses the traffic impacts associated with the proposed development located in Lehi, Utah. The proposed development is located on the east side of Redwood Road and west of the Jordan River, and north of Crossroads Boulevard and south of 2100 North. The development will consist of residential units and retail space. The development was assumed to be constructed in a single phase.

The site plan provides details on a range for the type of units for the residential space up to a maximum total number of units allowed. To remain conservative, the maximum number of units was used in the analysis. A concept plan for the proposed developments has been included in Appendix C.

The proposed land use for the development has been identified as follows:

- Shopping Center 673,000 sq. ft.
- Single Family Homes 667 Units
- Apartments 349 Units
- Townhomes 491 Units

C. Trip Generation

Trip generation for the development was calculated using trip generation rates published in the Institute of Transportation Engineers (ITE) Trip Generation (9th Edition, 2012). Trip Generation for the proposed project is included in .

The trip generation for the development is as follows:

- Daily Trips: 26,952
- Morning Peak Hour Trips: 966
- Evening Peak Hour Trips: 2,491

Table 3
Saratoga Springs - Cold Spring Ranch
Trip Generation

Weekday Daily Land Use[1]	Number of Units	Unit Type	Trip Generation	% Entering	% Exiting	Trips Entering	Trips Exiting	Mixed-Use Internal Capture	Pass-by Reduction	Net Trips Entering	Net Trips Exiting	Total Daily Trips
Single-Family Detached Housing (210)	467	Dwelling Units	4,336	50%	50%	2,168	2,168	15%	0%	1,843	1,843	**3,686**
Residential Condominium/Townhouse (23	384	Dwelling Units	2,074	50%	50%	1,037	1,037	15%	0%	881	881	**1,762**
Apartment (220)	285	Dwelling Units	1,852	50%	50%	926	926	15%	0%	787	787	**1,574**
Shopping Center (820) [fitted curve equati	673	1,000 Sq. Ft. GLA	23,448	50%	50%	11,724	11,724	15%	30%	6,976	6,976	**13,952**
Project Total Daily Trips						**15,855**	**15,855**			**10,487**	**10,487**	**20,974**
A.M. Peak Hour Land Use[1]	Number of Units	Unit Type	Trip Generation	% Entering	% Exiting	Trips Entering	Trips Exiting	Mixed-Use Internal Capture	Pass-by Reduction	Net Trips Entering	Net Trips Exiting	Total a.m. Trips
Single-Family Detached Housing (210)	467	Dwelling Units	338	25%	75%	85	254	15%	0%	72	216	**288**
Residential Condominium/Townhouse (23	384	Dwelling Units	152	17%	83%	26	126	15%	0%	22	107	**129**
Apartment (220)	285	Dwelling Units	144	20%	80%	29	115	15%	0%	25	98	**123**
Shopping Center (820) [fitted curve equati	673	1,000 Sq. Ft. GLA	500	62%	38%	310	190	15%	30%	184	113	**297**
Project Total a.m. Peak Hour Trips						**450**	**685**			**303**	**534**	**837**
P.M. Peak Hour Land Use[1]	Number of Units	Unit Type	Trip Generation	% Entering	% Exiting	Trips Entering	Trips Exiting	Mixed-Use Internal Capture	Pass-by Reduction	Net Trips Entering	Net Trips Exiting	Total p.m. Trips
Single-Family Detached Housing (210)	467	Dwelling Units	422	63%	37%	266	156	15%	0%	226	133	**359**
Residential Condominium/Townhouse (23	384	Dwelling Units	182	67%	33%	122	60	15%	0%	104	51	**155**
Apartment (220)	285	Dwelling Units	176	65%	35%	114	62	15%	0%	97	53	**150**
Shopping Center (820) [fitted curve equati	673	1,000 Sq. Ft. GLA	2,150	48%	52%	1,032	1,118	15%	30%	614	665	**1,279**
Project Total p.m. Peak Hour Trips						**1,534**	**1,396**			**1,041**	**902**	**1,943**
Saturday Daily Land Use[1]	Number of Units	Unit Type	Trip Generation	% Entering	% Exiting	Trips Entering	Trips Exiting	Mixed-Use Internal Capture	Pass-by Reduction	Net Trips Entering	Net Trips Exiting	Total Sat. Daily Trips
Single-Family Detached Housing (210)	467	Dwelling Units	4,258	50%	50%	2,129	2,129	15%	0%	1,810	1,810	**3,620**
Residential Condominium/Townhouse (23	384	Dwelling Units	1,820	50%	50%	910	910	15%	0%	774	774	**1,548**
Apartment (220)	285	Dwelling Units	1,982	50%	50%	991	991	15%	0%	842	842	**1,684**
Shopping Center (820) [fitted curve equati	673	1,000 Sq. Ft. GLA	30,710	50%	50%	15,355	15,355	15%	30%	9,136	9,136	**18,272**
Project Total Saturday Trips						**19,385**	**19,385**			**12,562**	**12,562**	**25,124**
Saturday Peak Hour Land Use[1]	Number of Units	Unit Type	Trip Generation	% Entering	% Exiting	Trips Entering	Trips Exiting	Mixed-Use Internal Capture	Pass-by Reduction	Net Trips Entering	Net Trips Exiting	Total Sat Pk Hr Trips
Single-Family Detached Housing (210)	467	Dwelling Units	426	54%	46%	230	196	15%	0%	196	167	**363**
Residential Condominium/Townhouse (23	384	Dwelling Units	154	54%	46%	83	71	15%	0%	71	60	**131**
Apartment (220)	285	Dwelling Units	150	54%	46%	81	69	15%	0%	69	59	**128**
Shopping Center (820) [fitted curve equati	561	1,000 Sq. Ft. GLA	2,684	52%	48%	1,396	1,288	15%	30%	831	766	**1,597**
Project Total Saturday Peak Hour Trips						**1,790**	**1,624**			**1,167**	**1,052**	**2,219**

1. Land Use Code from the Institute of Transportation Engineers Trip Generation Manual (9th Edition - 2012)

SOURCE: Hales Engineering, August 2016

D. Trip Reductions

Two trip reductions were taken for the proposed development. The first was an internal capture and the second was a pass-by reduction. The internal capture reduction was calculated based on ITE methodologies (see appendix E). Based on this calculation, a 15 percent reduction was taken.

The pass-by reduction was based on the average value that is published in the ITE Trip Generation Handbook (3rd Edition, 2014) in the pass-by chapter. A pass-by reduction was only used on the shopping center land use. Based on the ITE Trip Generation Handbook, the average pass-by value for the shopping center land use was 34 percent however, only 30 percent was used to remain conservative.

E. Trip Distribution and Assignment

Project traffic is assigned to the roadway network based on the type of trip and the proximity of project access points to major streets, high population densities, and regional trip attractions. Existing travel patterns observed during data collection also provide helpful guidance to establishing these distribution percentages, especially in close proximity to the site. The resulting distribution of project generated trips during the evening peak hour are as follows:

<u>To/From the Project</u>

- 15% South
- 30% North
- 25% East (via 2100 North)
- 15% West (via 2100 North)
- 10% East (via Crossroads Boulevard)
- 5% West (via Crossroads Boulevard)

These trip distribution assumptions were used to assign the evening peak hour generated traffic at the study intersections to create trip assignment for the proposed development. Because of roadway improvements, a different trip assignment was created for, 2016/2020 and 2040. Trip assignments for the development are shown in Figure 5, Figure 6, Figure 7, and Figure 8.

Saratoga Springs - Cold Spring Ranch
Trip Assignment (2016 & 2020)

Evening Peak Hour
Figure 5

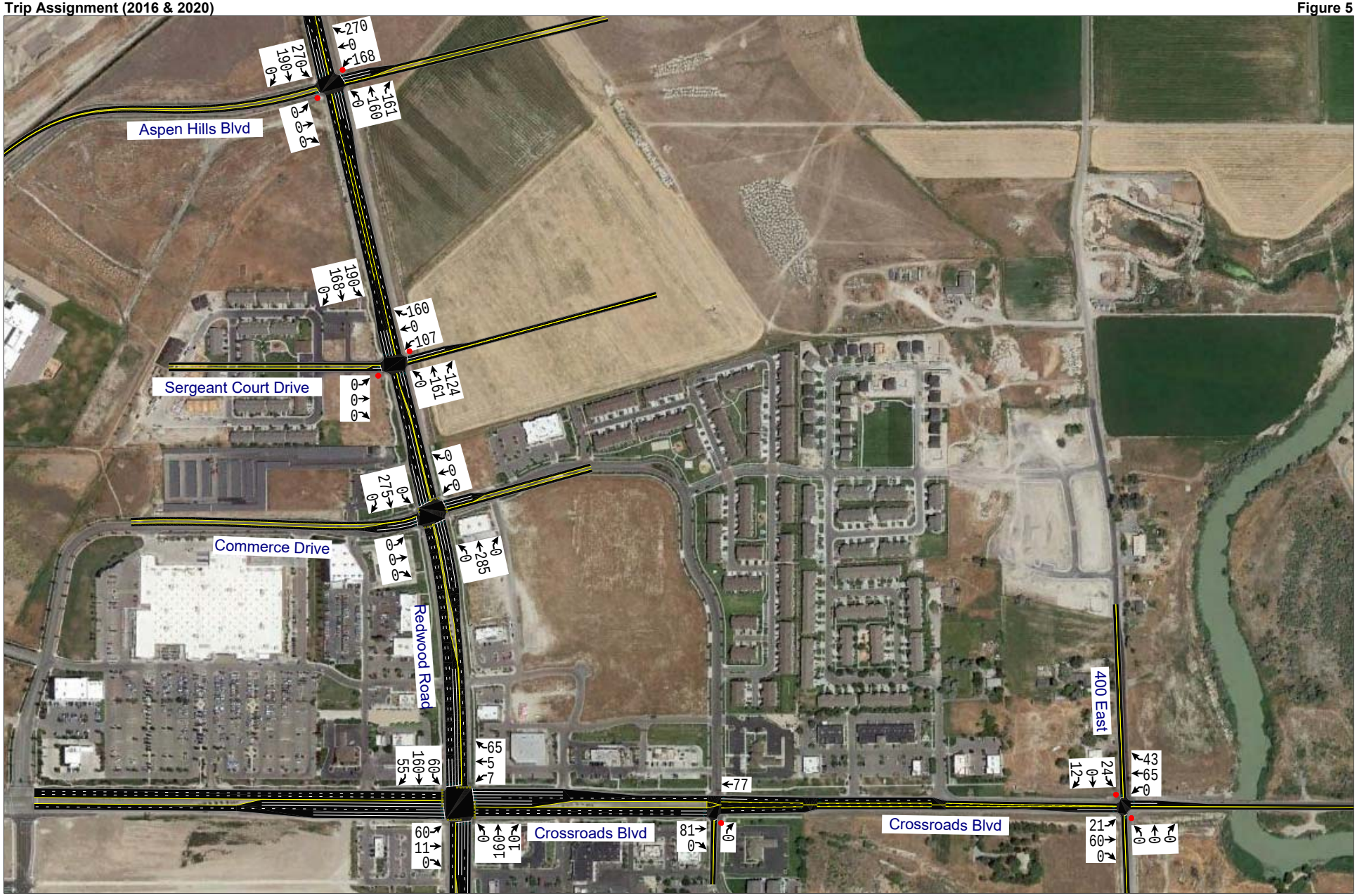

Hales Engineering
1220 North 500 West, Ste. 202 Lehi, Utah 84043

801.766.4343
8/23/2016

Saratoga Springs - Cold Spring Ranch
Trip Assignment (2016 & 2020)

Evening Peak Hour
Figure 6

Hales Engineering
1220 North 500 West, Ste. 202 Lehi, Utah 84043

801.766.4343
8/23/2016

Saratoga Springs - Cold Spring Ranch
Trip Assignment (2040)

Evening Peak Hour
Figure 7

Hales Engineering
1220 North 500 West, Ste. 202 Lehi, Utah 84043

801.766.4343
8/23/2016

Saratoga Springs - Cold Spring Ranch
Trip Assignment (2040)

Evening Peak Hour
Figure 8

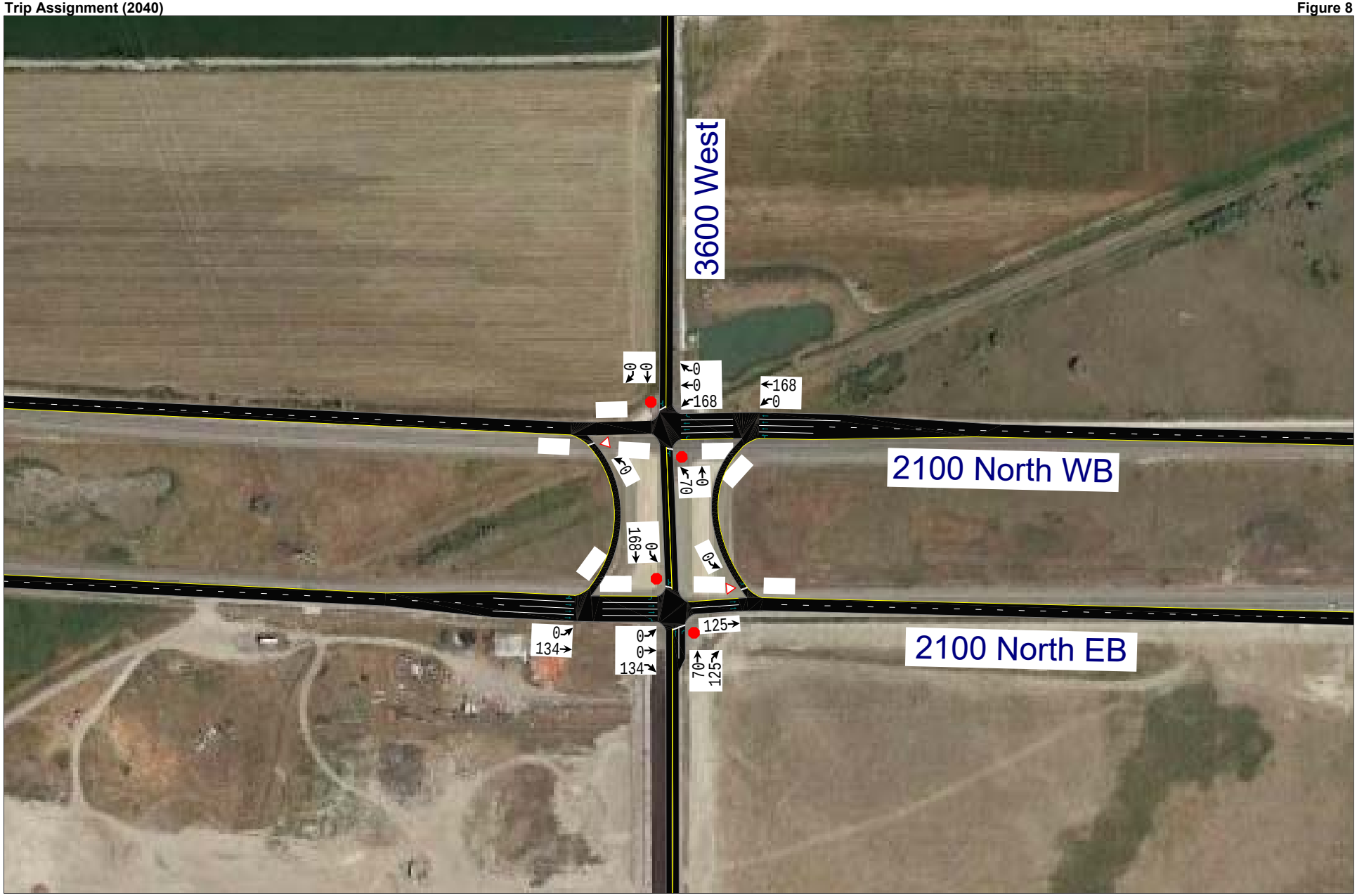

Hales Engineering
1220 North 500 West, Ste. 202 Lehi, Utah 84043

801.766.4343
8/23/2016

F. Access

The proposed access for the site will be gained at the following locations (see also concept plan in Appendix C):

Redwood Road:

- There are plans for two accesses off of Redwood Road. It is anticipated that both accesses will be a full movement, stop-controlled accesses. The first access will line up with the existing Aspen Hills Boulevard intersection and the second access will line up with the existing Sergeant Court Drive creating the fourth leg at each of these intersections. The distance between these two accesses is approximately 1,000 feet and thus would meet UDOTs access spacing requirements.

2100 North:

- There are plans for an access to 2100 North using the existing 3600 West roadway and intersection. The site will use 3600 West to pass through other properties between 2100 North and the proposed site.

Crossroads Boulevard:

- This access is planned to access Crossroads Boulevard using the existing 400 East roadway and intersection. It is anticipated that the access will be a full movement, stop-controlled access and in the future will be signalized based on transportation Master Plan.

G. Auxiliary Lane Requirements

Based on Administrative Rule R930-6, the following auxiliary lanes may be required for the proposed accesses onto Redwood Road (SR-68) (UDOT Access Category 5 roadway):

Left-turn Deceleration Lane:

- Required when the projected peak hour left-turn ingress volume is greater than 10 vph. As shown in Figure 9 and 10, it is anticipated that this volume will be met during the p.m. peak hour at both the Sergeant Court Drive / Redwood Road and Aspen Hills Boulevard / Redwood Road intersections. Therefore, a left-turn lane may be required at this location. There is currently a center turn lane that may be used to accommodate the left-turn movement.

Right-turn Deceleration Lane:

- Required when the projected peak hour right-turn ingress volume is greater than 25 vph. As shown in Figure 9 and 10, this peak hour volume will be met during the p.m. peak hour

at the both the Sergeant Court Drive / Redwood Road and Aspen Hills Boulevard / Redwood Road intersections. Therefore, a right-turn deceleration lane is recommended and required at both intersections.

Right-turn Acceleration Lane:

- Required when the projected peak hour right-turn egress volume is greater than 50 vph when the posted speed limit on the highway is greater than 40 mph. As shown in Figure 9 and 10, this peak hour volume will be met at both accesses during the p.m. peak hour, and the posted speed limit is greater than 40 mph. Therefore, a right-turn acceleration lane may be required at both intersections.

Left-turn Acceleration Lane:

- Required if it will help the safety and operations of the roadway. Generally, not required where the posted speed limit is less than 45. As shown in Figure 9 and 10, it is anticipated that a left-turn acceleration lane would interfere with the left-turning movements into other access/streets. Therefore, a left-turn acceleration lane is not recommended.

IV. EXISTING (2016) PLUS PROJECT CONDITIONS

A. Purpose

The purpose of the existing (2016) plus project analysis is to study the intersections and roadways during the peak travel periods of the day for existing background traffic and geometric conditions plus the net trips generated by the proposed development. This scenario provides valuable insight into the potential impacts of the proposed project on background traffic conditions.

B. Traffic Volumes

Project trips were assigned to the study intersections based on the trip distribution percentages discussed in Chapter III and permitted intersection turning movements. The existing (2016) plus project evening peak hour volumes were generated for the study intersections and are shown in Figure 9 and Figure 10.

C. Level of Service Analysis

Using Synchro/SimTraffic, which follow the Highway Capacity Manual (HCM) 2010 methodology introduced in Chapter I, the evening peak hour LOS was computed for each study intersection. The results of this analysis are reported in Table 4 (see Appendix B for the detailed LOS reports). Multiple runs of SimTraffic were used to provide a statistical evaluation of the interaction between the intersections. As shown in Table 4, all study intersections are performing at acceptable LOS during the evening peak hour except Aspen Hills Drive / Redwood Road, Sergeant Court Drive / Redwood Road, 2100 North / 3600 West eastbound and westbound.

D. Queuing Analysis

Hales Engineering calculated the 95th percentile queue lengths for each of the study intersections. The queue reports can be found in Appendix D. The intersection of Crossroads Boulevard / Redwood Road has some queueing in the north- and southbound directions of approximately 320 and 530 feet respectively. Aspen Hills Boulevard / Redwood Road is anticipated to have significant queueing in the east- and westbound directions of approximately 690 and 880 feet respectively. Sergeant Court Drive / Redwood Road is anticipated to have significant queueing in the east- and westbound directions of approximately 400 and 800 feet respectively. No other queueing of significance is anticipated during the evening peak hour.

Saratoga Springs - Cold Spring Ranch
Existing (2016) Plus Project

Evening Peak Hour
Figure 9

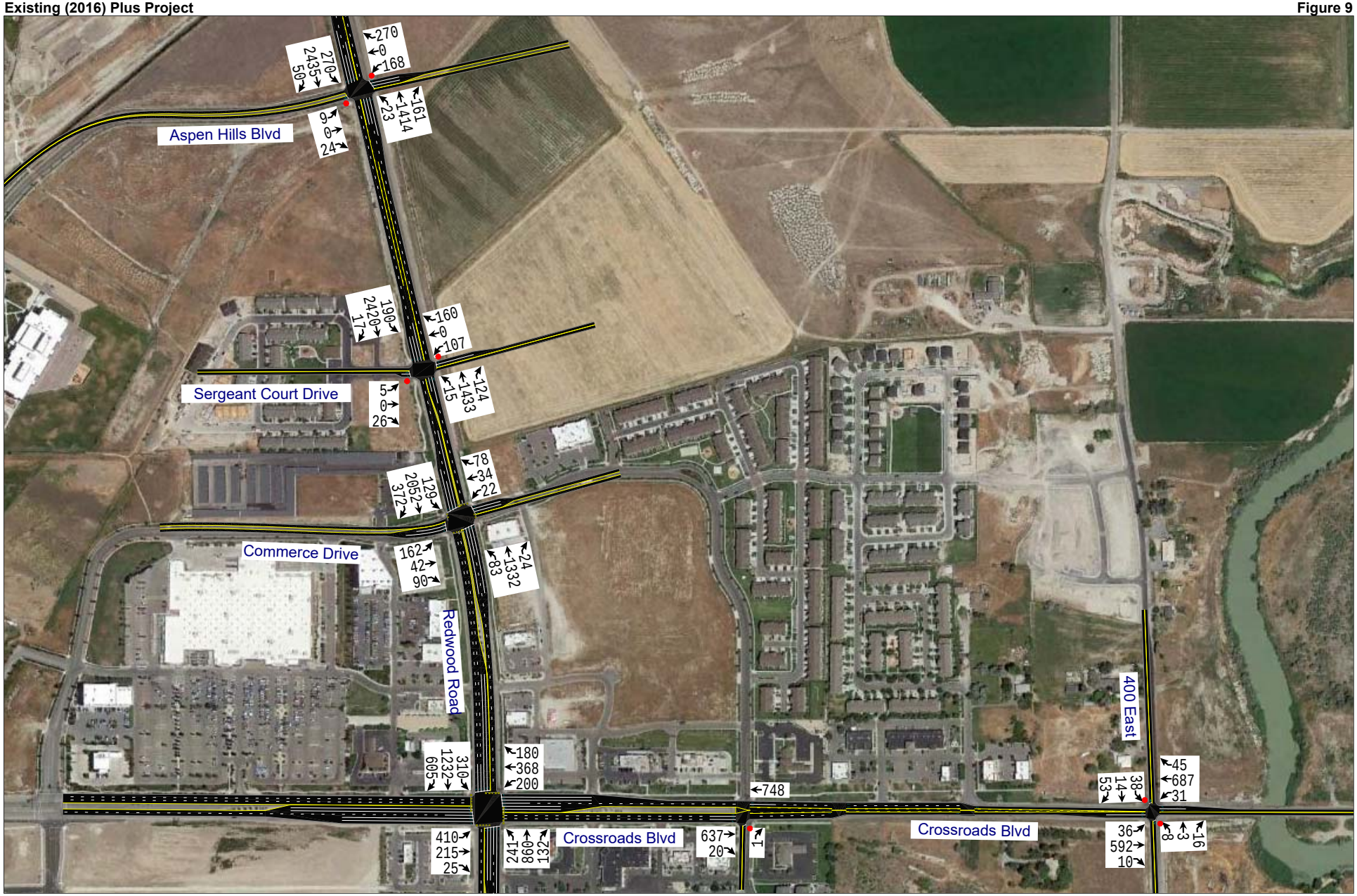

Hales Engineering
1220 North 500 West, Ste. 202 Lehi, Utah 84043

801.766.4343
8/23/2016

3600 West
2100 North WB
2100 North EB
21
1
1794
4
1750
234
1988
6
1
1
43
13
242
6
1
965
1
954
10
1149
43
182

Table 4 Existing (2016) Plus Project Evening Peak Hour Level of Service

Intersection		Worst Approach			Overall Intersection	
Description	Control	Approach[1,3]	Aver. Delay (Sec/Veh)[1]	LOS[1]	Aver. Delay (Sec/Veh)[2]	LOS[2]
Crossroads Boulevard / Redwood Road	Signal	-	-	-	36.7	D
Commerce Drive / Redwood Road	Signal	-	-	-	23.9	C
Aspen Hills Boulevard / Redwood Road	EB/WB Stop	WB	> 50	F	-	-
Sergeant Court Drive / Redwood Road	EB/WB Stop	WB	> 50	F	-	-
3600 West / 2100 North WB	NB/SB Stop	SB	46.9	E	-	-
3600 West / 2100 North EB	NB/SB Stop	NB	76.8	F	-	-
400 East / Crossroads Boulevard	NB/SB Stop	SB	22.3	C	-	-

1. This represents the worst approach LOS and delay (seconds / vehicle) and is only reported for non-all-way stop unsignalized intersections.
2. This represents the overall intersection LOS and delay (seconds / vehicle) and is reported for all-way stop and signal controlled intersections.
3. SB = Southbound approach, etc.

Source: Hales Engineering, August 2016

E. Mitigation Measures

The two proposed accesses onto Redwood Road are anticipated to perform at poor LOS. It is recommended that a traffic signal be constructed at the intersection of Aspen Hills Boulevard. This signal is not a part of either Lehi or Saratoga Springs Transportation Master Plan. It is also not part of UDOT's Redwood Road Corridor Agreement and does not meet the access spacing requirements. However, the accesses to the proposed commercial portion of the development will not function adequately without a signal.

It is also recommended that dual left-turn lanes be constructed in the westbound direction turning on to Redwood Road. This movement does not typically warrant dual left-turn lanes with the typical capacity analysis guidelines however, the dual left-turn recommendation is based on minimizing the green time that is given to this movement. It is also recommended that right-turn deceleration and acceleration pockets be constructed in the northbound direction at the intersections of Sergeant Court Drive / Redwood Road and Aspen Hills Boulevard / Redwood Road, as required by Administrative Rule R930-6.

The intersections on 2100 North / 3600 West are also anticipated to perform poorly. The volumes at these intersections are not anticipated to meet signal warrants in 2016 however, it is recommended that a signal be constructed at this location when signal warrants are met.

Making a left-turn out of the proposed development onto Redwood Road is anticipate to be difficult during the peak hours. An additional analysis was completed using the recommended mitigation measures. It was assumed that the traffic patterns would change into and out of the development when a signal is constructed at Aspen Hills Boulevard / Redwood Road intersection. It was assumed that approximately 95 percent of left-turns exiting the site from Sergeant Court Drive would re-route to Aspen Hills Boulevard and approximately 15 percent of southbound left-turns into the site would reroute to Aspen Hills Boulevard and make their left-turns at the traffic Signal.

The results from the additional analysis are reported in Table 5 (see Appendix B for the detailed LOS reports). As seen in Table 5, all study intersections are anticipated to perform at acceptable LOS except Sergeant Court Drive / Redwood Road and 3600 West / 2100 North. For the intersection of Sergeant Court Drive / Redwood Road, there are a few options that can be explored to mitigate the failing intersection. One measure that could be considered is a right-in right-out or 3/4 access. These types of accesses limit the movements vehicles can make causing them to re-route. This may also not be the best solution since there isn't a great way for drivers to reroute and it is anticipated that Sergeant Court Drive will perform poorly only during the peak hours. The remaining hours of the day, these accesses are anticipated to perform at acceptable LOS.

Table 5 Existing (2016) Plus Project Evening Peak Hour Level of Service - Mitigated

Intersection		Worst Approach			Overall Intersection	
Description	Control	Approach[1,3]	Aver. Delay (Sec/Veh)[1]	LOS[1]	Aver. Delay (Sec/Veh)[2]	LOS[2]
Crossroads Boulevard / Redwood Road	Signal	-	-	-	37.7	C
Commerce Drive / Redwood Road	Signal	-	-	-	27.4	C
Aspen Hills Boulevard / Redwood Road	Signal	-	-	-	32.9	C
Sergeant Court Drive / Redwood Road	EB Stop	EB	> 50	F	-	-
3600 West / 2100 North WB	NB/SB Stop	SB	41.1	E	-	-
3600 West / 2100 North EB	NB/SB Stop	SB	32.4	D	-	-
400 East / Crossroads Boulevard	NB/SB Stop	SB	23.5	C	-	-

1. This represents the worst approach LOS and delay (seconds / vehicle) and is only reported for non-all-way stop unsignalized intersections.
2. This represents the overall intersection LOS and delay (seconds / vehicle) and is reported for all-way stop and signal controlled intersections.
3. SB = Southbound approach, etc.

Source: Hales Engineering, August 2016

V. FUTURE (2020) BACKGROUND CONDITIONS

A. Purpose

The purpose of the future (2020) background analysis is to study the intersections and roadways during the peak travel periods of the day for future background traffic and geometric conditions. Through this analysis, future background traffic operational deficiencies can be identified and potential mitigation measures recommended.

B. Roadway Network

According to the TransPlan40 Regional Transportation Plan produced by the Mountainland Association of Governments (MAG) and the Saratoga Springs and Lehi Transportation Master Plan, minimal improvements are anticipated to occur on any main arterial roadways. It was assumed that by year 2020 no roadway improvements are expected except mitigation measures from previous studies: the signalization of 3600 West / 2100 North and a right-turn pocket at 400 East / Crossroads Boulevard intersections.

C. Traffic Volumes

Hales Engineering obtained future (2020) forecasted volumes from the Wasatch Front Regional Council (WFRC) / Mountainlands Association of Governments (MAG) travel demand model. Peak period turning movement counts were estimated using NCHRP 255 methodologies which utilize existing peak period turn volumes and future AWDT volumes to project the future turn volumes at the major intersections. Future 2020 evening peak hour turning movement volumes are shown in Figure 11 and Figure 12.

A previous study completed by Hales Engineering for a nearby Ivory Homes development was included in this analysis. This development will mainly affect the 2100 North corridor and where 3600 West intersects with 2100 North. The turning movements were added to this analysis. As part of the previous study, signals were required at the intersection of 3600 West / 2100 North and were also included in this analysis.

Another analysis was previously completed by Hales Engineering for the Jordan View Landing development that is located near the intersection of 400 East / Crossroads Boulevard. This project traffic was added to this intersection. In this previous study, it was recommended that a right-turn pocket be added to the north leg of the 400 East / Crossroads Boulevard intersection. This right-turn pocket was also included in this analysis.

Saratoga Springs - Cold Spring Ranch
Future (2020) Background

Evening Peak Hour
Figure 11

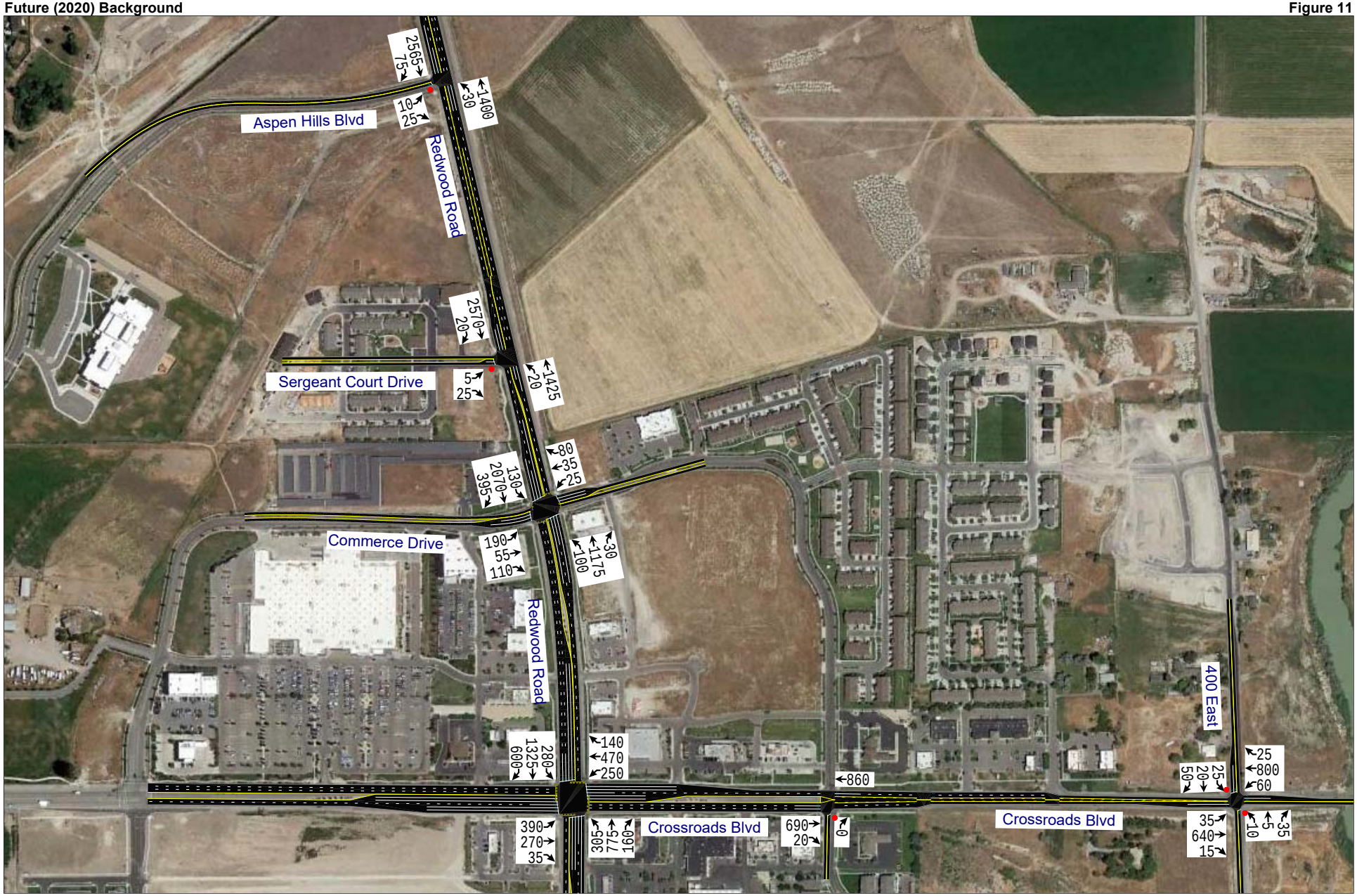

Hales Engineering
1220 North 500 West, Ste. 202 Lehi, Utah 84043

801.766.4343
8/23/2016

Saratoga Springs - Cold Spring Ranch
Future (2020) Background

Evening Peak Hour
Figure 12

Hales Engineering
1220 North 500 West, Ste. 202 Lehi, Utah 84043

801.766.4343
8/23/2016

D. Level of Service Analysis

Using Synchro/SimTraffic, which follow the Highway Capacity Manual (HCM) 2010 methodology introduced in Chapter I, the evening peak hour LOS was computed for each study intersection. The results of this analysis are reported in Table 6 (see Appendix B for the detailed LOS reports). Multiple runs of SimTraffic were used to provide a statistical evaluation of the interaction between the intersections. These results serve as a baseline condition for the impact analysis of the proposed development for future (2020) conditions. As shown in Table 6, all intersections are anticipated to perform at acceptable LOS except: Aspen Hills Boulevard / Redwood Road and Sergeant Court Drive / Redwood Road.

Table 6 Future (2020) Background Evening Peak Hour Level of Service

Intersection		Worst Approach			Overall Intersection	
Description	Control	Approach[1,3]	Aver. Delay (Sec/Veh)[1]	LOS[1]	Aver. Delay (Sec/Veh)[2]	LOS[2]
Crossroads Boulevard / Redwood Road	Signal	-	-	-	41.4	D
Commerce Drive / Redwood Road	Signal	-	-	-	26.7	C
Aspen Hills Boulevard / Redwood Road	EB Stop	EB	> 50	F	-	-
Sergeant Court Drive / Redwood Drive	EB Stop	EB	> 50	F	-	-
3600 West / 2100 North WB	Signal	-	-	-	23.5	C
3600 West / 2100 North EB	Signal	-	-	-	29.5	C
400 East / Crossroads Boulevard	NB/SB Stop	SB	32.7	D	-	-

1. This represents the worst approach LOS and delay (seconds / vehicle) and is only reported for non-all-way stop unsignalized intersections.
2. This represents the overall intersection LOS and delay (seconds / vehicle) and is reported for all-way stop and signal controlled intersections.
3. SB = Southbound approach, etc.

Source: Hales Engineering, August 2016

E. Queuing Analysis

Hales Engineering calculated the 95th percentile queue lengths for each of the study intersections. The intersection of Crossroads Boulevard / Redwood Road has some queueing in the north-, east-, and southbound directions of approximately 300, 220, and 560 feet respectively. The intersection of Commerce Drive / Redwood Road has some queueing in the north-, east-,

and southbound directions of approximately 380, 260, and 550 feet respectively. Both Aspen Hills Boulevard and Sergeant Court Drive are anticipated to have some queueing in the eastbound direction of approximately 560, and 360 feet respectively where they intersect with Redwood Road. No other queueing of significance is anticipated during the evening peak hour.

F. Mitigation Measures

Aspen Hills Boulevard / Redwood Road and Sergeant Court Drive / Redwood Road are anticipated to perform at an unacceptable LOS, however no mitigation measures are recommended. It is not uncommon for small side streets on major arterials to perform poorly during the peak hours. A few measures that could be considered to mitigate the issues have been discussed previously.

In a previous study that was completed by Hales Engineering, it was reported that the intersection of 2100 North / Redwood Road was performing at unacceptable LOS. This intersection also had significant queueing in the southbound direction during the evening peak hour. 2100 North / Redwood Road intersection is anticipated, in the year 2020, to be unable to meet the demand. Thus, this intersection is acting as a meter and only allowing some of the vehicles through it.

This metering condition was mimicked in the future 2020 analysis. The intersections in the study area that are along Redwood Road are performing at acceptable LOS with exception to Sergeant Court Drive and Aspen Hills Boulevard due to the metering effect. In the previous study completed by Hales Engineering, it was recommended that Redwood Road be widened to a seven lane cross section so it is able to meet the roadway demand.

VI. FUTURE (2020) PLUS PROJECT CONDITIONS

A. Purpose

The purpose of the future (2020) plus project analysis is to study the intersections and roadways during the peak travel periods of the day for future background traffic and geometric conditions plus the net trips generated by the proposed development. This scenario provides valuable insight into the potential impacts of the proposed project on future background traffic conditions.

B. Traffic Volumes

Hales Engineering obtained future (2020) forecasted volumes from the WFRC travel demand model. Peak period turning movement counts were estimated using NCHRP 255 methodologies which utilize existing peak period turn volumes and future ADT volumes to project the future turn volumes at the major intersections.

Trips were assigned to the study intersections based on the trip distribution percentages discussed in Chapter III and permitted intersection turning movements. Future (2020) plus project evening peak hour turning movement volumes are shown in Figure 13 and Figure 14.

C. Level of Service Analysis

Using Synchro/SimTraffic, which follow the Highway Capacity Manual (HCM) 2010 methodology introduced in Chapter I, the evening peak hour LOS was computed for each study intersection. The results of this analysis are reported in Table 7 (see Appendix B for the detailed LOS reports). Multiple runs of SimTraffic were used to provide a statistical evaluation of the interaction between the intersections. As shown in Table 7, all intersections are anticipated to perform at acceptable LOS except:400 East / Crossroads Boulevard and Sergeant Court Drive / Redwood Road.

D. Queuing Analysis

Hales Engineering calculated the 95th percentile queue lengths for each of the study intersections. The queue reports can be found in Appendix D. The intersection of Crossroads Boulevard / Redwood Road has some queueing in the north-, east-, and southbound directions of approximately 410, 260, and 1,000 feet respectively. The intersection of Commerce Drive / Redwood Road has some queueing in the north-, east-, and southbound directions of approximately 500, 260, and 600 feet respectively. Aspen Hills Boulevard / Redwood Road is anticipated to have some queueing in the north- and southbound directions of approximately 440, and 820 feet. 3600 West / 2100 North is anticipated to have some queueing in the southbound

Saratoga Springs - Cold Spring Ranch
Future (2020) Plus Project

Evening Peak Hour
Figure 13

Hales Engineering
1220 North 500 West, Ste. 202 Lehi, Utah 84043

801.766.4343
8/23/2016

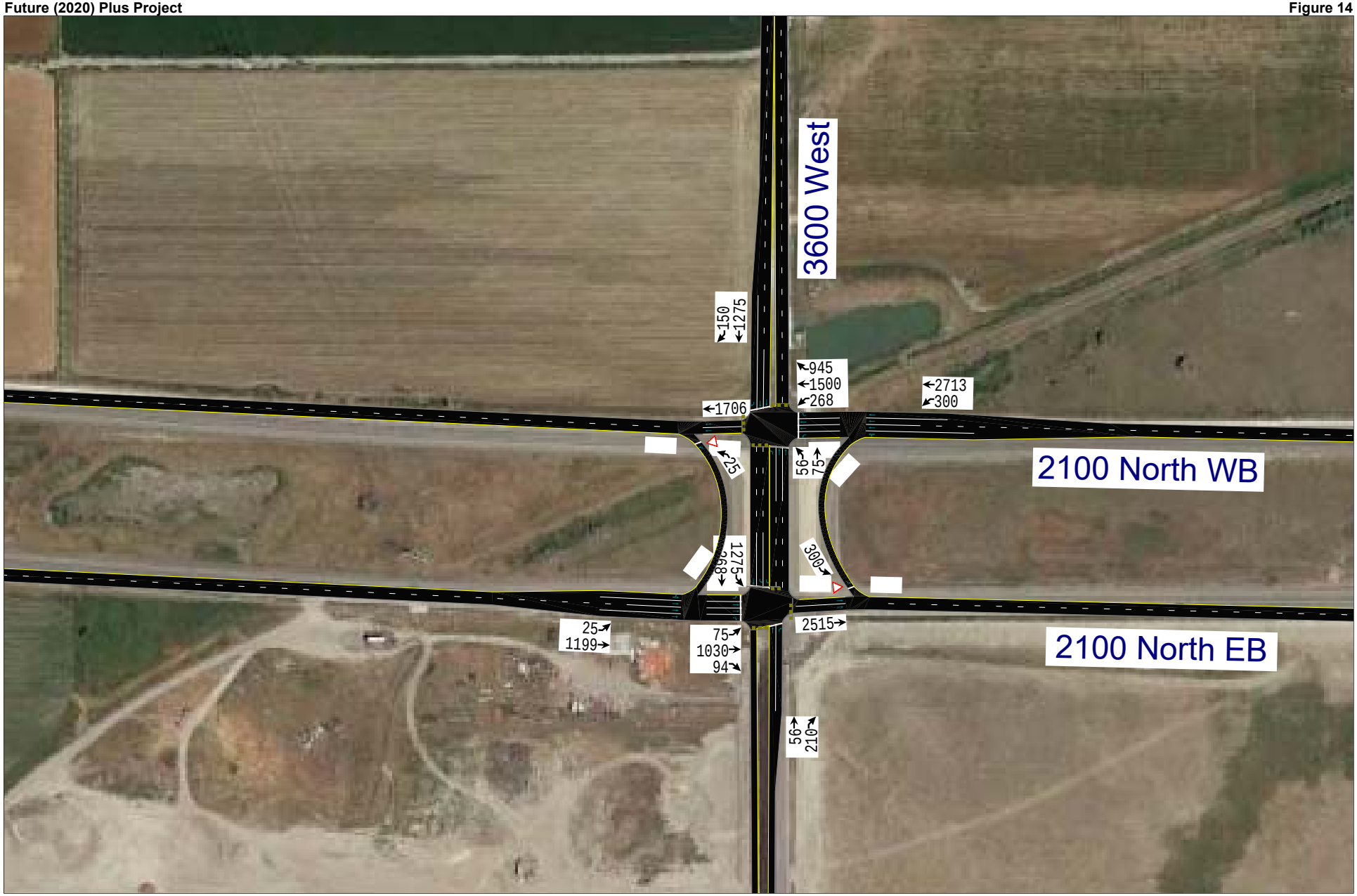
3600 West
2100 North WB
2100 North EB
150
1275
945
1500
268
2713
300
1706
25
56
75
1275
68
300
25
1199
75
1030
94
2515
56
210

direction of approximately 710 feet. The intersection of 400 East / Crossroads Boulevard is anticipated to have approximately 480 feet of queueing in the southbound direction. No other queueing of significance is anticipated during the evening peak hour.

Table 7 Future (2020) Plus Project Evening Peak Hour Level of Service

Intersection		Worst Approach			Overall Intersection	
Description	Control	Approach[1,3]	Aver. Delay (Sec/Veh)[1]	LOS[1]	Aver. Delay (Sec/Veh)[2]	LOS[2]
Crossroads Boulevard / Redwood Road	Signal	-	-	-	51.9	D
Commerce Drive / Redwood Road	Signal	-	-	-	30.3	C
Aspen Hills Boulevard / Redwood Road	Signal	-	-	-	39.9	D
Sergeant Court Drive / Redwood Road	EB Stop	EB	> 50	F	-	-
3600 West / 2100 North WB	Signal	-	-	-	26.8	C
3600 West / 2100 North EB	Signal	-	-	-	26.6	C
400 East / Crossroads Boulevard	NB/SB Stop	SB	> 50	F	-	-

1. This represents the worst approach LOS and delay (seconds / vehicle) and is only reported for non-all-way stop unsignalized intersections.
2. This represents the overall intersection LOS and delay (seconds / vehicle) and is reported for all-way stop and signal controlled intersections.
3. SB = Southbound approach, etc.

Source: Hales Engineering, August 2016

E. Mitigation Measures

The intersection of 400 East / Crossroads Boulevard is anticipated to perform poorly. There are plans to put a signal at this location and is recommended to that it be constructed when warrants are met. No additional mitigation measures are recommended at this time.

VII. FUTURE (2040) BACKGROUND CONDITIONS

A. Purpose

The purpose of the future (2040) background analysis is to study the intersections and roadways during the peak travel periods of the day for future background traffic and geometric conditions. Through this analysis, future background traffic operational deficiencies can be identified and potential mitigation measures recommended.

B. Roadway Network

According to the TransPlan40 Regional Transportation Plan produced by the Mountainland Association of Governments (MAG) and the Lehi and Saratoga Springs Transportation Master Plan, Mountain View Corridor, both the frontage roads and the freeway portion, is anticipated to be completed by year 2040. It is also anticipated that the freeway portion of 2100 North will also be completed. In addition to the new freeways, it was assumed that Crossroads Boulevard, east of 400 East will be widened to a 5 lane cross section. It was assumed that the intersection of 400 East / Crossroads Boulevard will be signalized. It has been assumed that all signal timings have been optimized.

C. Traffic Volumes

Hales Engineering obtained future (2040) forecasted volumes from the Wasatch Front Regional Council (WFRC) / Mountainlands Association of Governments (MAG) travel demand model. Peak period turning movement counts were estimated using NCHRP 255 methodologies which utilize existing peak period turn volumes and future AWDT volumes to project the future turn volumes at the major intersections. Future 2040 evening peak hour turning movement volumes are shown in Figure 15 and Figure 16. The drop in traffic volumes is due to the anticipated opening of the Mountain View Corridor through Saratoga Springs. It was assumed that many vehicles would use Mountain View Corridor rather than Redwood Road.

Saratoga Springs - Cold Spring Ranch
Future (2040) Background

Evening Peak Hour
Figure 15

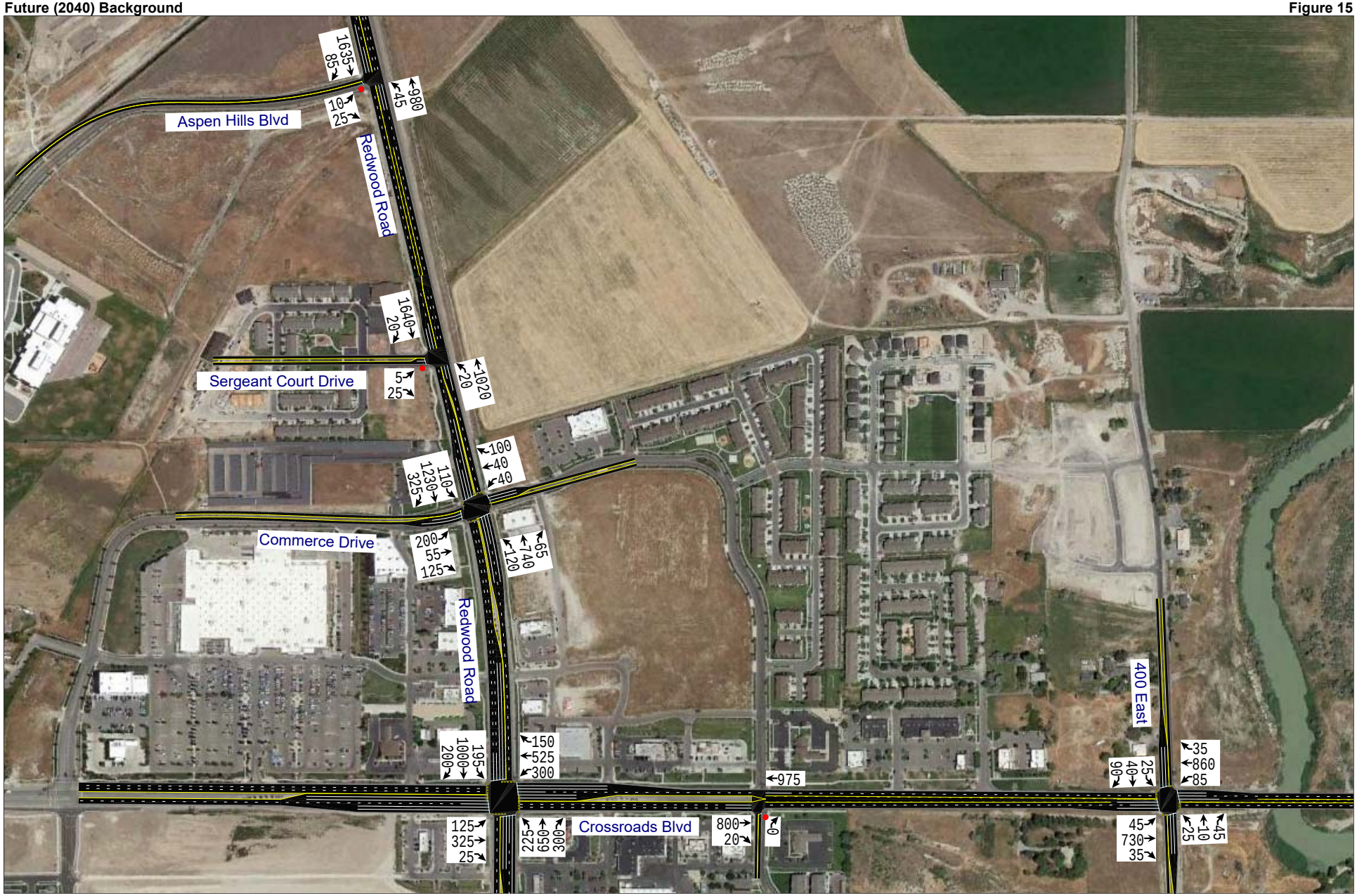

Hales Engineering
1220 North 500 West, Ste. 202 Lehi, Utah 84043

801.766.4343
8/23/2016

Saratoga Springs - Cold Spring Ranch
Future (2040) Background

Evening Peak Hour
Figure 16

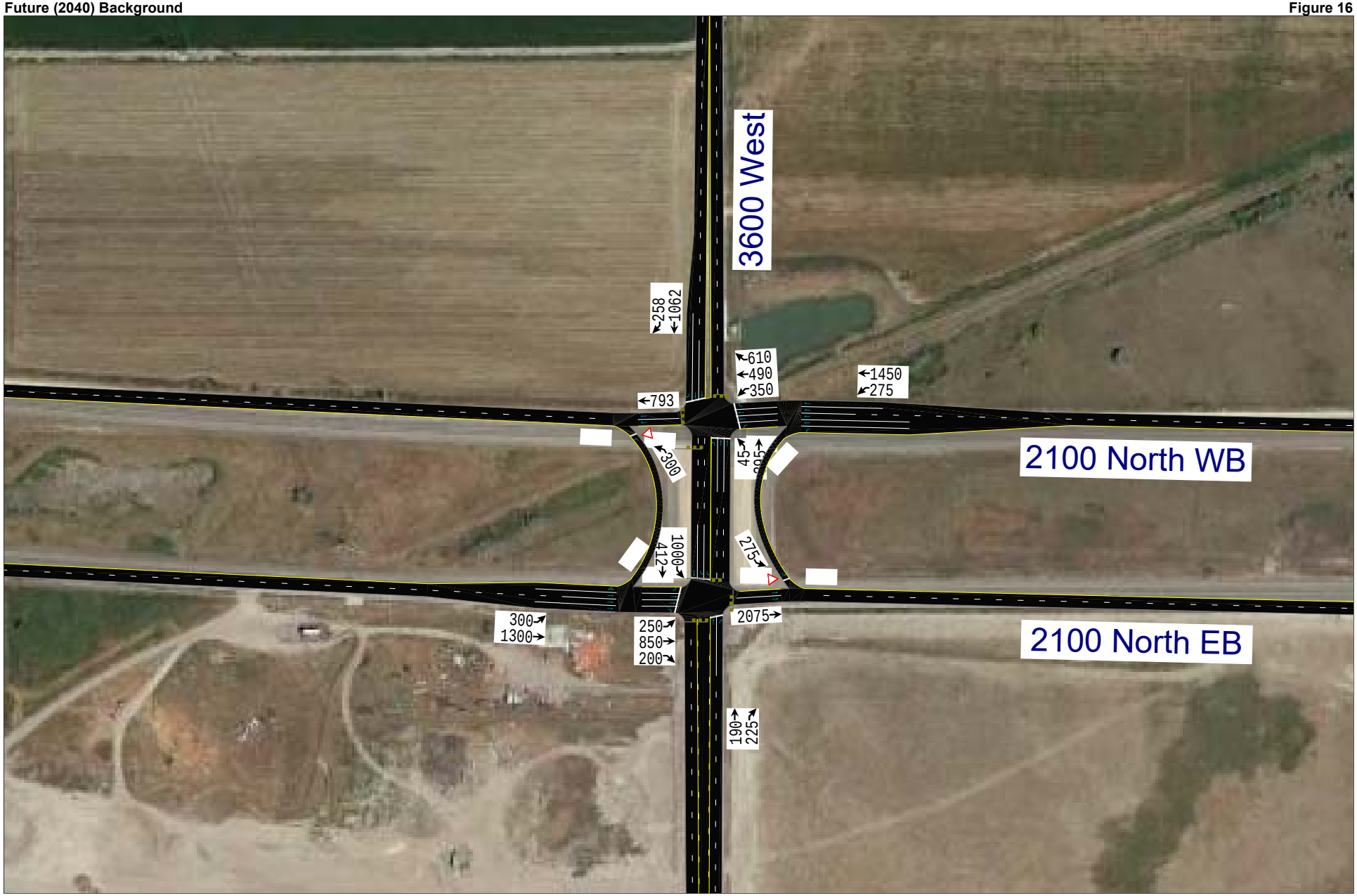

Hales Engineering
1220 North 500 West, Ste. 202 Lehi, Utah 84043

801.766.4343
8/23/2016

D. Level of Service Analysis

Using Synchro/SimTraffic, which follow the Highway Capacity Manual (HCM) 2010 methodology introduced in Chapter I, the evening peak hour LOS was computed for each study intersection. The results of this analysis are reported in Table 8 (see Appendix B for the detailed LOS reports). Multiple runs of SimTraffic were used to provide a statistical evaluation of the interaction between the intersections. These results serve as a baseline condition for the impact analysis of the proposed development for future (2040) conditions. As shown in Table 8, all intersections are anticipated to perform at acceptable LOS.

Table 8 Future (2040) Background Evening Peak Hour Level of Service

Intersection		Worst Approach			Overall Intersection	
Description	Control	Approach[1,3]	Aver. Delay (Sec/Veh)[1]	LOS[1]	Aver. Delay (Sec/Veh)[2]	LOS[2]
Crossroads Boulevard / Redwood Road	Signal	-	-	-	33.0	C
Commerce Drive / Redwood Road	Signal	-	-	-	19.0	B
Aspen Hills Boulevard / Redwood Road	EB Stop	EB	28.2	D	-	-
Sergeant Court Drive / Redwood Drive	EB Stop	EB	31.0	D	-	-
3600 West / 2100 North WB	NB/SB Stop	-	-	-	24.4	C
3600 West / 2100 North EB	NB/SB Stop	-	-	-	28.0	C
400 East / Crossroads Boulevard	NB/SB Stop	-	-	-	9.9	A

1. This represents the worst approach LOS and delay (seconds / vehicle) and is only reported for non-all-way stop unsignalized intersections.
2. This represents the overall intersection LOS and delay (seconds / vehicle) and is reported for all-way stop and signal controlled intersections.
3. SB = Southbound approach, etc.

Source: Hales Engineering, August 2016

E. Queuing Analysis

Hales Engineering calculated the 95th percentile queue lengths for each of the study intersections. The intersection of 3600 West / 2100 North is anticipated to have some queueing in the southbound direction of approximately 440 feet. No other queueing of significance is anticipated during the evening peak hour.

F. Mitigation Measures

No mitigation measures are recommended at this time.

VIII. FUTURE (2040) PLUS PROJECT CONDITIONS

A. Purpose

The purpose of the future (2040) plus project analysis is to study the intersections and roadways during the peak travel periods of the day for future background traffic and geometric conditions plus the net trips generated by the proposed development. This scenario provides valuable insight into the potential impacts of the proposed project on future background traffic conditions.

B. Traffic Volumes

Hales Engineering obtained future (2040) forecasted volumes from the WFRC travel demand model. Peak period turning movement counts were estimated using NCHRP 255 methodologies which utilize existing peak period turn volumes and future ADT volumes to project the future turn volumes at the major intersections.

Trips were assigned to the study intersections based on the trip distribution percentages discussed in Chapter III and permitted intersection turning movements. Because of the new Mountain View Corridor freeway that is anticipated to be complete by year 2040, the travel patterns / dynamics of the area are anticipated to change.

Figure 7 and Figure 8 shows the trip assignment for this condition. Future (2040) plus project evening peak hour turning movement volumes are shown in Figure 17 and Figure 18.

C. Level of Service Analysis

Using Synchro/SimTraffic, which follow the Highway Capacity Manual (HCM) 2010 methodology introduced in Chapter I, the evening peak hour LOS was computed for each study intersection. The results of this analysis are reported in Table 9 (see Appendix B for the detailed LOS reports). Multiple runs of SimTraffic were used to provide a statistical evaluation of the interaction between the intersections. As shown in Table 9, all intersections are anticipated to perform at acceptable LOS except the Sergeant Court Drive / Redwood Road intersection.

Saratoga Springs - Cold Spring Ranch
Future (2040) Plus Project

Evening Peak Hour
Figure 17

Hales Engineering
1220 North 500 West, Ste. 202 Lehi, Utah 84043

801.766.4343
8/23/2016

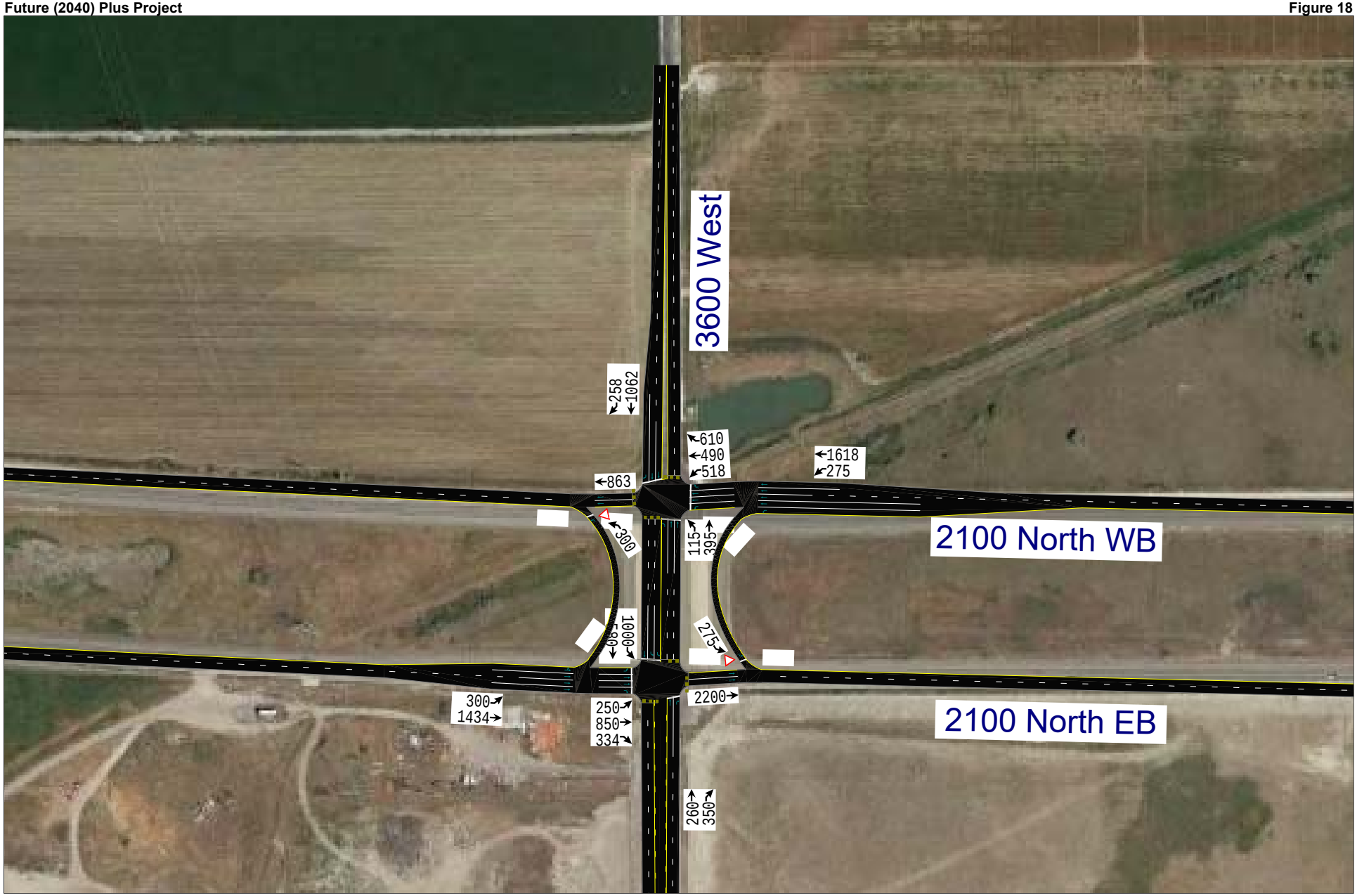
3600 West
2100 North WB
2100 North EB
258
1062
610
490
518
1618
275
863
300
115
395
80
1000
275
300
1434
250
850
334
2200
260
350

Table 9 Future (2040) Plus Project Evening Peak Hour Level of Service

Intersection		Worst Approach			Overall Intersection	
Description	Control	Approach[1,3]	Aver. Delay (Sec/Veh)[1]	LOS[1]	Aver. Delay (Sec/Veh)[2]	LOS[2]
Crossroads Boulevard / Redwood Road	Signal	-	-	-	33.7	C
Commerce Drive / Redwood Road	Signal	-	-	-	22.4	C
Aspen Hills Boulevard / Redwood Road	Signal	-	-	-	18.8	B
Sergeant Court Drive / Redwood Road	EB Stop	EB	> 50	F	-	-
3600 West / 2100 North WB	NB/SB Stop	-	-	-	25.6	C
3600 West / 2100 North EB	NB/SB Stop	-	-	-	26.8	C
400 East / Crossroads Boulevard	NB/SB Stop	-	-	-	10.4	B

1. This represents the worst approach LOS and delay (seconds / vehicle) and is only reported for non-all-way stop unsignalized intersections.
2. This represents the overall intersection LOS and delay (seconds / vehicle) and is reported for all-way stop and signal controlled intersections.
3. SB = Southbound approach, etc.

Source: Hales Engineering, August 2016

D. Queuing Analysis

Hales Engineering calculated the 95th percentile queue lengths for each of the study intersections. The queue reports can be found in Appendix D. The intersection of 3600 West / 2100 North is anticipated to have some queueing in the southbound direction of approximately 480 feet. There is also some queueing anticipated at the intersection of Commerce Drive / Redwood Road of approximately 350 feet in the northbound direction. No other queueing of significance is anticipated during the evening peak hour.

E. Mitigation Measures

No new mitigation measures are recommended at this time. Sergeant Court Drive / Redwood Road is anticipated to perform at an unacceptable LOS. It is not uncommon for small side streets on major arterials to perform poorly during the peak hours. A few measures that could be considered to mitigate the issues have been discussed in previous chapters.

HALES ENGINEERING
innovative transportation solutions

APPENDIX A

Turning Movement Counts

TrafficCounts

2364 North 1450 East
Lehi, UT 84043
801.636.0891

Intersection Turning Movement Summary

Intersection: Redwood Rd / Aspen Hills
North/South: Redwood Rd
East/West: Aspen Hills
Jurisdiction: Saratoga Springs
Project Title: Cold Spring Ranch TIS
Project No: UT16-928
Weather:

Date: 8-11-16, Thu
Day of Week Adjustment: 100.0%
Month of Year Adjustment: 100.0%
Adjustment Station #: 0
Growth Rate: 0.0%
Number of Years: 0

AM PEAK HOUR PERIOD: **7:45-8:45**
AM PEAK 15 MINUTE PERIOD: **7:45-8:00**
AM PHF: **0.89**

SCHOOL PEAK HOUR PERIOD:
SCHOOL PEAK 15 MINUTE PERIOD:
SCHOOL PHF:

PM PEAK HOUR PERIOD: **17:00-18:00**
PM PEAK 15 MINUTE PERIOD: **17:45-18:00**
PM PHF: **0.78**

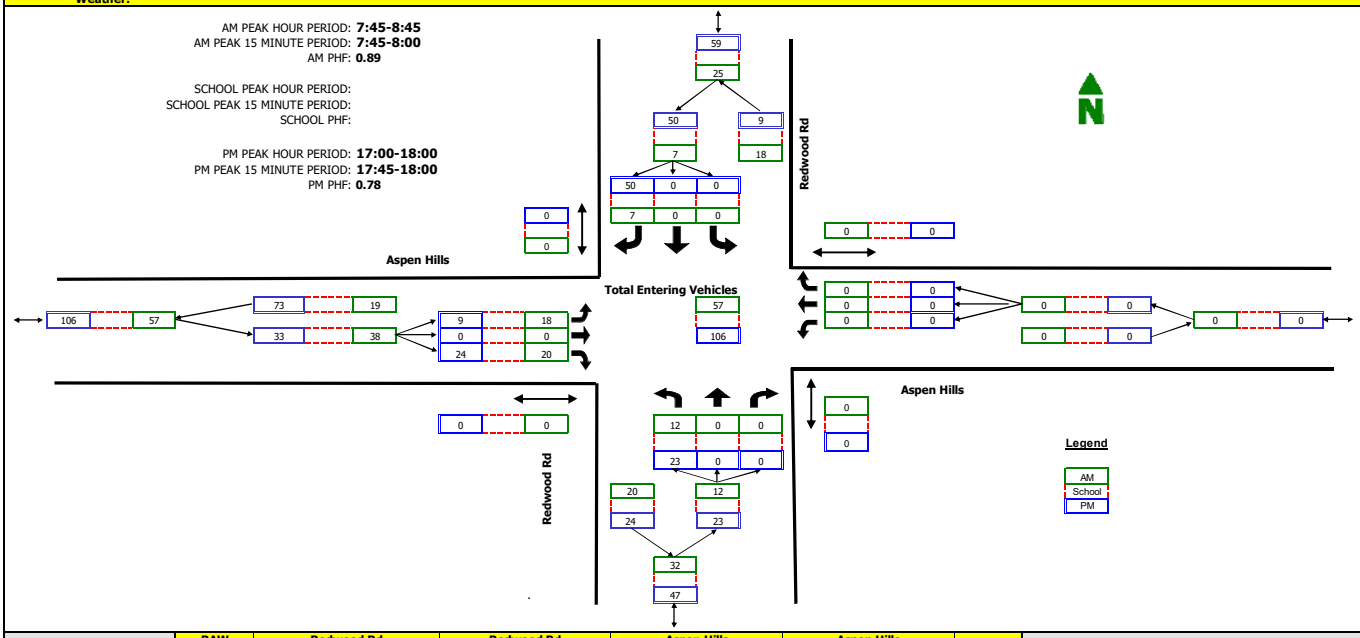

RAW COUNT SUMMARIES	Redwood Rd Northbound				Redwood Rd Southbound				Aspen Hills Eastbound				Aspen Hills Westbound				
	Left	Thru	Right	Peds	Left	Thru	Right	Peds	Left	Thru	Right	Peds	Left	Thru	Right	Peds	
AM PERIOD COUNTS																	
Period	**A**	**B**	**C**	**D**	**E**	**F**	**G**	**H**	**I**	**J**	**K**	**L**	**M**	**N**	**O**	**P**	**TOTAL**
7:00-7:15	0	0	0	0	0	0	2	0	6	0	2	0	0	0	0	0	10
7:15-7:30	0	0	0	0	0	0	0	0	5	0	0	0	0	0	0	0	5
7:30-7:45	1	0	0	0	0	0	1	0	6	0	2	0	0	0	0	0	10
7:45-8:00	3	0	0	0	0	0	1	0	4	0	8	0	0	0	0	0	16
8:00-8:15	4	0	0	0	0	0	3	0	2	0	2	0	0	0	0	0	11
8:15-8:30	5	0	0	0	0	0	2	0	6	0	3	0	0	0	0	0	16
8:30-8:45	0	0	0	0	0	0	1	0	6	0	7	0	0	0	0	0	14
8:45-9:00	6	0	0	0	0	0	0	1	7	0	0	0	0	0	0	0	13
MIDDAY PERIOD COUNTS																	
Period	**A**	**B**	**C**	**D**	**E**	**F**	**G**	**H**	**I**	**J**	**K**	**L**	**M**	**N**	**O**	**P**	**TOTAL**
9:00-9:15	0	0	0	0	0	0	0	0	0	0	0	0	0	0	0	0	0
9:15-9:30	0	0	0	0	0	0	0	0	0	0	0	0	0	0	0	0	0
9:30-9:45	0	0	0	0	0	0	0	0	0	0	0	0	0	0	0	0	0
9:45-10:00	0	0	0	0	0	0	0	0	0	0	0	0	0	0	0	0	0
10:00-10:15	0	0	0	0	0	0	0	0	0	0	0	0	0	0	0	0	0
10:15-10:30	0	0	0	0	0	0	0	0	0	0	0	0	0	0	0	0	0
10:30-10:45	0	0	0	0	0	0	0	0	0	0	0	0	0	0	0	0	0
10:45-11:00	0	0	0	0	0	0	0	0	0	0	0	0	0	0	0	0	0
11:00-11:15	0	0	0	0	0	0	0	0	0	0	0	0	0	0	0	0	0
11:15-11:30	0	0	0	0	0	0	0	0	0	0	0	0	0	0	0	0	0
11:30-11:45	0	0	0	0	0	0	0	0	0	0	0	0	0	0	0	0	0
11:45-12:00	0	0	0	0	0	0	0	0	0	0	0	0	0	0	0	0	0
12:00-12:15	0	0	0	0	0	0	0	0	0	0	0	0	0	0	0	0	0
12:15-12:30	0	0	0	0	0	0	0	0	0	0	0	0	0	0	0	0	0
12:30-12:45	0	0	0	0	0	0	0	0	0	0	0	0	0	0	0	0	0
12:45-13:00	0	0	0	0	0	0	0	0	0	0	0	0	0	0	0	0	0
13:00-13:15	0	0	0	0	0	0	0	0	0	0	0	0	0	0	0	0	0
13:15-13:30	0	0	0	0	0	0	0	0	0	0	0	0	0	0	0	0	0
13:30-13:45	0	0	0	0	0	0	0	0	0	0	0	0	0	0	0	0	0
13:45-14:00	0	0	0	0	0	0	0	0	0	0	0	0	0	0	0	0	0
14:00-14:15	0	0	0	0	0	0	0	0	0	0	0	0	0	0	0	0	0
14:15-14:30	0	0	0	0	0	0	0	0	0	0	0	0	0	0	0	0	0
14:30-14:45	0	0	0	0	0	0	0	0	0	0	0	0	0	0	0	0	0
14:45-15:00	0	0	0	0	0	0	0	0	0	0	0	0	0	0	0	0	0
15:00-15:15	0	0	0	0	0	0	0	0	0	0	0	0	0	0	0	0	0
15:15-15:30	0	0	0	0	0	0	0	0	0	0	0	0	0	0	0	0	0
15:30-15:45	0	0	0	0	0	0	0	0	0	0	0	0	0	0	0	0	0
15:45-16:00	0	0	0	0	0	0	0	0	0	0	0	0	0	0	0	0	0
PM PERIOD COUNTS																	
Period	**A**	**B**	**C**	**D**	**E**	**F**	**G**	**H**	**I**	**J**	**K**	**L**	**M**	**N**	**O**	**P**	**TOTAL**
16:00-16:15	4	0	0	0	0	0	6	0	1	0	6	0	0	0	0	0	17
16:15-16:30	6	0	0	0	0	0	6	0	2	0	7	0	0	0	0	0	21
16:30-16:45	7	0	0	0	0	0	5	0	0	0	4	0	0	0	0	0	16
16:45-17:00	3	0	0	0	0	0	11	0	3	0	6	0	0	0	0	0	23
17:00-17:15	4	0	0	0	0	0	7	0	2	0	7	0	0	0	0	0	20
17:15-17:30	6	0	0	0	0	0	10	0	2	0	4	0	0	0	0	0	22
17:30-17:45	3	0	0	0	0	0	18	0	2	0	7	0	0	0	0	0	30
17:45-18:00	10	0	0	0	0	0	15	0	3	0	6	0	0	0	0	0	34

TrafficCounts

2364 North 1450 East
Lehi, UT 84043
801.636.0891

Intersection Turning Movement Summary

Intersection: 3600 West / EB 2100 North
North/South: 3600 West
East/West: EB 2100 North
Jurisdiction: Saratoga Springs
Project Title: Cold Spring Ranch TIS
Project No: UT16-928
Weather:

Date: 8-11-16, Thu
Day of Week Adjustment: 100.0%
Month of Year Adjustment: 100.0%
Adjustment Station #: 0
Growth Rate: 0.0%
Number of Years: 0

AM PEAK HOUR PERIOD: **7:45-8:45**
AM PEAK 15 MINUTE PERIOD: **7:45-8:00**
AM PHF: **0.88**

SCHOOL PEAK HOUR PERIOD:
SCHOOL PEAK 15 MINUTE PERIOD:
SCHOOL PHF:

PM PEAK HOUR PERIOD: **17:00-18:00**
PM PEAK 15 MINUTE PERIOD: **17:45-18:00**
PM PHF: **0.91**

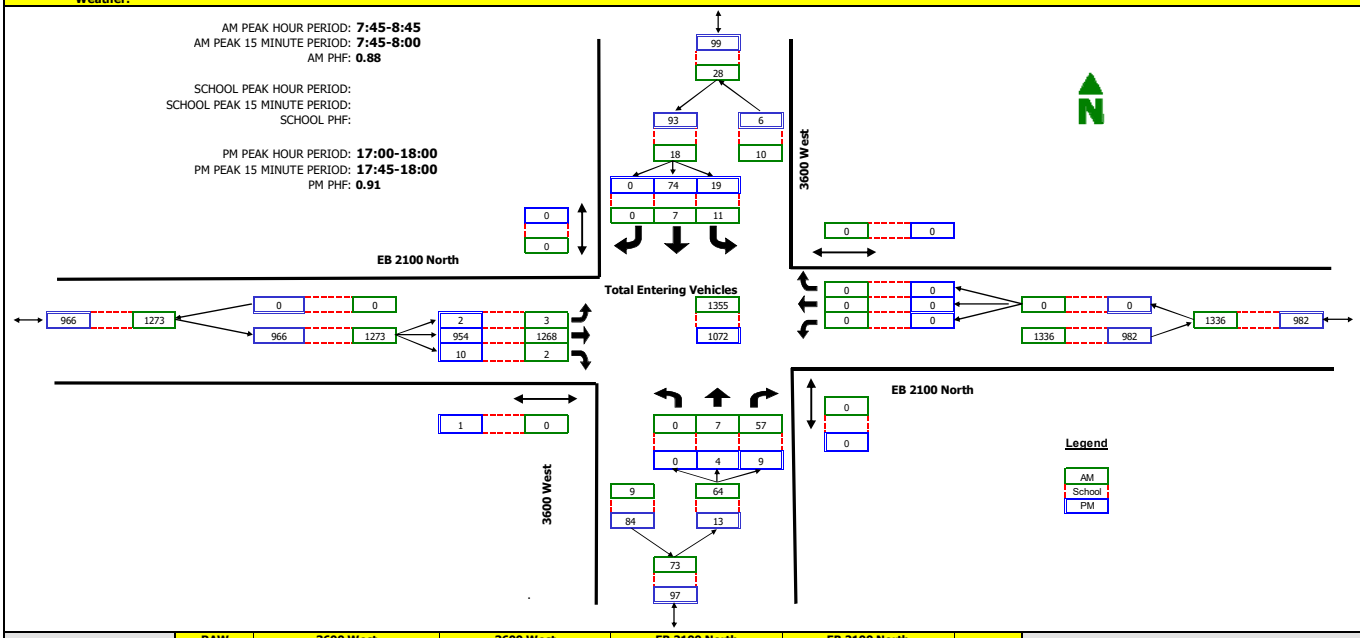

RAW COUNT SUMMARIES	3600 West Northbound Left	Thru	Right	Peds	3600 West Southbound Left	Thru	Right	Peds	EB 2100 North Eastbound Left	Thru	Right	Peds	EB 2100 North Westbound Left	Thru	Right	Peds	
AM PERIOD COUNTS																	
Period	**A**	**B**	**C**	**D**	**E**	**F**	**G**	**H**	**I**	**J**	**K**	**L**	**M**	**N**	**O**	**P**	**TOTAL**
7:00-7:15	0	0	14	0	0	6	0	0	0	207	1	0	0	0	0	1	228
7:15-7:30	0	1	10	0	0	4	0	0	0	254	0	0	0	0	0	1	269
7:30-7:45	0	3	11	0	0	2	0	0	1	298	0	0	0	0	0	0	315
7:45-8:00	0	0	10	0	1	2	0	0	0	369	1	0	0	0	0	0	383
8:00-8:15	0	2	21	0	5	1	0	0	2	299	0	0	0	0	0	0	330
8:15-8:30	0	4	12	0	0	3	0	0	0	295	1	0	0	0	0	0	315
8:30-8:45	0	1	14	0	5	1	0	0	1	305	0	0	0	0	0	0	327
8:45-9:00	0	0	11	0	0	4	0	0	0	365	1	0	0	0	0	0	381
MIDDAY PERIOD COUNTS																	
Period	**A**	**B**	**C**	**D**	**E**	**F**	**G**	**H**	**I**	**J**	**K**	**L**	**M**	**N**	**O**	**P**	**TOTAL**
9:00-9:15	0	0	0	0	0	0	0	0	0	0	0	0	0	0	0	0	0
9:15-9:30	0	0	0	0	0	0	0	0	0	0	0	0	0	0	0	0	0
9:30-9:45	0	0	0	0	0	0	0	0	0	0	0	0	0	0	0	0	0
9:45-10:00	0	0	0	0	0	0	0	0	0	0	0	0	0	0	0	0	0
10:00-10:15	0	0	0	0	0	0	0	0	0	0	0	0	0	0	0	0	0
10:15-10:30	0	0	0	0	0	0	0	0	0	0	0	0	0	0	0	0	0
10:30-10:45	0	0	0	0	0	0	0	0	0	0	0	0	0	0	0	0	0
10:45-11:00	0	0	0	0	0	0	0	0	0	0	0	0	0	0	0	0	0
11:00-11:15	0	0	0	0	0	0	0	0	0	0	0	0	0	0	0	0	0
11:15-11:30	0	0	0	0	0	0	0	0	0	0	0	0	0	0	0	0	0
11:30-11:45	0	0	0	0	0	0	0	0	0	0	0	0	0	0	0	0	0
11:45-12:00	0	0	0	0	0	0	0	0	0	0	0	0	0	0	0	0	0
12:00-12:15	0	0	0	0	0	0	0	0	0	0	0	0	0	0	0	0	0
12:15-12:30	0	0	0	0	0	0	0	0	0	0	0	0	0	0	0	0	0
12:30-12:45	0	0	0	0	0	0	0	0	0	0	0	0	0	0	0	0	0
12:45-13:00	0	0	0	0	0	0	0	0	0	0	0	0	0	0	0	0	0
13:00-13:15	0	0	0	0	0	0	0	0	0	0	0	0	0	0	0	0	0
13:15-13:30	0	0	0	0	0	0	0	0	0	0	0	0	0	0	0	0	0
13:30-13:45	0	0	0	0	0	0	0	0	0	0	0	0	0	0	0	0	0
13:45-14:00	0	0	0	0	0	0	0	0	0	0	0	0	0	0	0	0	0
14:00-14:15	0	0	0	0	0	0	0	0	0	0	0	0	0	0	0	0	0
14:15-14:30	0	0	0	0	0	0	0	0	0	0	0	0	0	0	0	0	0
14:30-14:45	0	0	0	0	0	0	0	0	0	0	0	0	0	0	0	0	0
14:45-15:00	0	0	0	0	0	0	0	0	0	0	0	0	0	0	0	0	0
15:00-15:15	0	0	0	0	0	0	0	0	0	0	0	0	0	0	0	0	0
15:15-15:30	0	0	0	0	0	0	0	0	0	0	0	0	0	0	0	0	0
15:30-15:45	0	0	0	0	0	0	0	0	0	0	0	0	0	0	0	0	0
15:45-16:00	0	0	0	0	0	0	0	0	0	0	0	0	0	0	0	0	0
PM PERIOD COUNTS																	
Period	**A**	**B**	**C**	**D**	**E**	**F**	**G**	**H**	**I**	**J**	**K**	**L**	**M**	**N**	**O**	**P**	**TOTAL**
16:00-16:15	0	0	4	0	1	6	0	0	2	191	1	0	0	4	0	1	209
16:15-16:30	0	1	2	0	3	6	0	0	2	215	1	0	0	0	0	0	230
16:30-16:45	0	2	1	0	0	13	0	0	1	186	43	0	0	0	0	0	246
16:45-17:00	0	2	2	1	2	15	0	0	1	208	4	1	0	0	0	1	234
17:00-17:15	0	0	2	0	0	12	0	0	0	215	4	0	0	0	0	0	233
17:15-17:30	0	2	3	0	9	14	0	0	0	228	1	0	0	0	0	0	257
17:30-17:45	0	2	1	0	7	25	0	0	1	249	3	0	0	0	0	0	288
17:45-18:00	0	0	3	0	3	23	0	0	1	262	2	1	0	0	0	0	294

TrafficCounts

2364 North 1450 East
Lehi, UT 84043
801.636.0891

Intersection Turning Movement Summary

Intersection: 3600 West / WB 2100 North
North/South: 3600 West
East/West: WB 2100 North
Jurisdiction: Saratoga Springs
Project Title: Cold Spring Ranch TIS
Project No: UT16-928
Weather:

Date: 8-11-16, Thu
Day of Week Adjustment: 100.0%
Month of Year Adjustment: 100.0%
Adjustment Station #: 0
Growth Rate: 0.0%
Number of Years: 0

AM PEAK HOUR PERIOD: **7:15-8:15**
AM PEAK 15 MINUTE PERIOD: **7:30-7:45**
AM PHF: **0.93**

SCHOOL PEAK HOUR PERIOD:
SCHOOL PEAK 15 MINUTE PERIOD:
SCHOOL PHF:

PM PEAK HOUR PERIOD: **16:45-17:45**
PM PEAK 15 MINUTE PERIOD: **17:15-17:30**
PM PHF: **0.94**

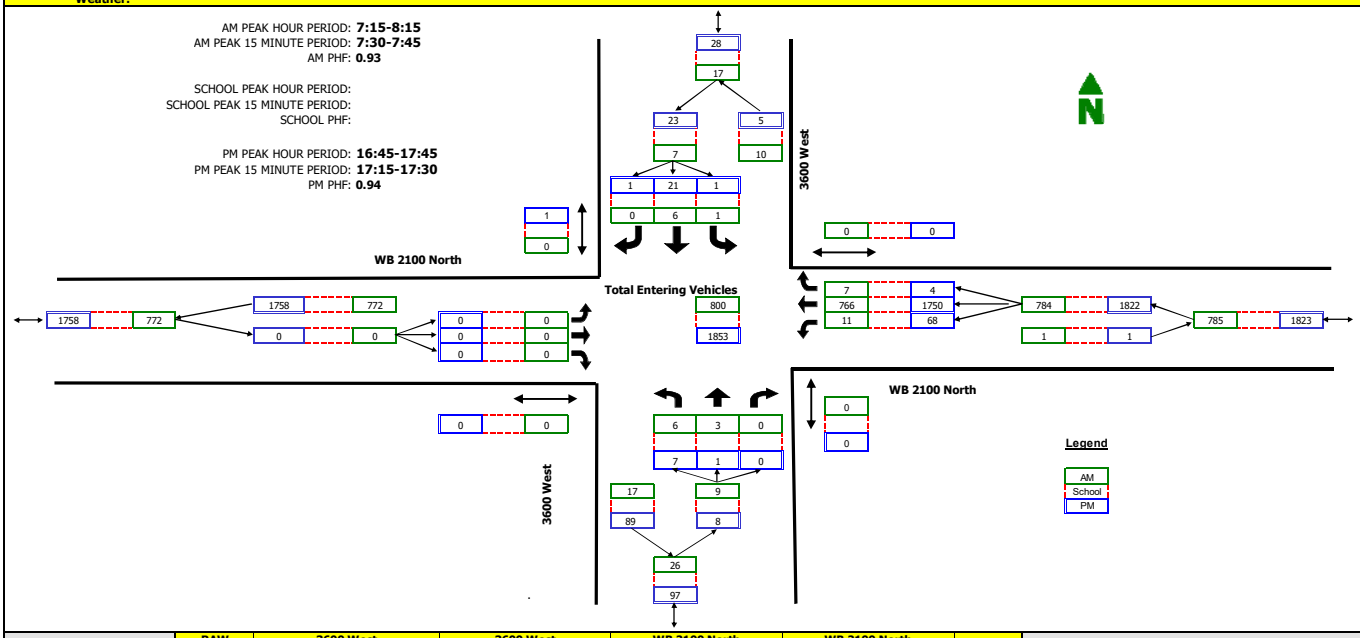

RAW COUNT SUMMARIES	3600 West Northbound				3600 West Southbound				WB 2100 North Eastbound				WB 2100 North Westbound				
	Left	Thru	Right	Peds	Left	Thru	Right	Peds	Left	Thru	Right	Peds	Left	Thru	Right	Peds	
AM PERIOD COUNTS																	
Period	**A**	**B**	**C**	**D**	**E**	**F**	**G**	**H**	**I**	**J**	**K**	**L**	**M**	**N**	**O**	**P**	**TOTAL**
7:00-7:15	0	0	0	0	0	0	1	0	0	0	0	0	8	172	4	0	185
7:15-7:30	1	0	0	0	1	0	0	0	0	0	0	0	4	178	3	0	187
7:30-7:45	3	1	0	0	0	1	0	0	0	0	0	0	2	208	1	0	216
7:45-8:00	0	0	0	0	0	2	0	0	0	0	0	0	4	201	3	0	210
8:00-8:15	2	2	0	0	0	3	0	0	0	0	0	0	1	179	0	0	187
8:15-8:30	3	0	0	0	0	2	0	0	0	0	0	0	2	133	3	0	143
8:30-8:45	1	0	0	0	0	5	0	0	0	0	0	0	1	158	1	0	166
8:45-9:00	0	0	0	0	0	1	0	0	0	0	0	0	5	129	4	0	139
MIDDAY PERIOD COUNTS																	
Period	**A**	**B**	**C**	**D**	**E**	**F**	**G**	**H**	**I**	**J**	**K**	**L**	**M**	**N**	**O**	**P**	**TOTAL**
9:00-9:15	0	0	0	0	0	0	0	0	0	0	0	0	0	0	0	0	0
9:15-9:30	0	0	0	0	0	0	0	0	0	0	0	0	0	0	0	0	0
9:30-9:45	0	0	0	0	0	0	0	0	0	0	0	0	0	0	0	0	0
9:45-10:00	0	0	0	0	0	0	0	0	0	0	0	0	0	0	0	0	0
10:00-10:15	0	0	0	0	0	0	0	0	0	0	0	0	0	0	0	0	0
10:15-10:30	0	0	0	0	0	0	0	0	0	0	0	0	0	0	0	0	0
10:30-10:45	0	0	0	0	0	0	0	0	0	0	0	0	0	0	0	0	0
10:45-11:00	0	0	0	0	0	0	0	0	0	0	0	0	0	0	0	0	0
11:00-11:15	0	0	0	0	0	0	0	0	0	0	0	0	0	0	0	0	0
11:15-11:30	0	0	0	0	0	0	0	0	0	0	0	0	0	0	0	0	0
11:30-11:45	0	0	0	0	0	0	0	0	0	0	0	0	0	0	0	0	0
11:45-12:00	0	0	0	0	0	0	0	0	0	0	0	0	0	0	0	0	0
12:00-12:15	0	0	0	0	0	0	0	0	0	0	0	0	0	0	0	0	0
12:15-12:30	0	0	0	0	0	0	0	0	0	0	0	0	0	0	0	0	0
12:30-12:45	0	0	0	0	0	0	0	0	0	0	0	0	0	0	0	0	0
12:45-13:00	0	0	0	0	0	0	0	0	0	0	0	0	0	0	0	0	0
13:00-13:15	0	0	0	0	0	0	0	0	0	0	0	0	0	0	0	0	0
13:15-13:30	0	0	0	0	0	0	0	0	0	0	0	0	0	0	0	0	0
13:30-13:45	0	0	0	0	0	0	0	0	0	0	0	0	0	0	0	0	0
13:45-14:00	0	0	0	0	0	0	0	0	0	0	0	0	0	0	0	0	0
14:00-14:15	0	0	0	0	0	0	0	0	0	0	0	0	0	0	0	0	0
14:15-14:30	0	0	0	0	0	0	0	0	0	0	0	0	0	0	0	0	0
14:30-14:45	0	0	0	0	0	0	0	0	0	0	0	0	0	0	0	0	0
14:45-15:00	0	0	0	0	0	0	0	0	0	0	0	0	0	0	0	0	0
15:00-15:15	0	0	0	0	0	0	0	0	0	0	0	0	0	0	0	0	0
15:15-15:30	0	0	0	0	0	0	0	0	0	0	0	0	0	0	0	0	0
15:30-15:45	0	0	0	0	0	0	0	0	0	0	0	0	0	0	0	0	0
15:45-16:00	0	0	0	0	0	0	0	0	0	0	0	0	0	0	0	0	0
PM PERIOD COUNTS																	
Period	**A**	**B**	**C**	**D**	**E**	**F**	**G**	**H**	**I**	**J**	**K**	**L**	**M**	**N**	**O**	**P**	**TOTAL**
16:00-16:15	1	1	0	0	0	4	1	0	0	0	0	0	5	321	3	0	336
16:15-16:30	2	1	0	0	0	6	1	1	0	0	0	0	9	353	1	0	373
16:30-16:45	2	1	0	0	0	1	3	0	0	0	0	0	14	386	1	0	408
16:45-17:00	2	1	0	0	1	2	1	0	0	0	0	0	13	431	0	0	451
17:00-17:15	0	0	0	0	0	2	0	1	0	0	0	0	11	430	2	0	445
17:15-17:30	2	0	0	0	0	7	0	0	0	0	0	0	19	462	1	0	491
17:30-17:45	3	0	0	0	0	10	0	0	0	0	0	0	25	427	1	0	466
17:45-18:00	3	1	0	0	0	3	0	1	0	0	0	0	20	424	0	0	451

TrafficCounts

2364 North 1450 East
Lehi, UT 84043
801.636.0891

Intersection Turning Movement Summary

Intersection: Redwood Rd / Commerce Drive
North/South: Redwood Rd
East/West: Commerce Drive
Jurisdiction: Saratoga Springs
Project Title: Cold Spring Ranch TIS
Project No: UT16-928
Weather:

Date: 8-11-16, Thu
Day of Week Adjustment: 100.0%
Month of Year Adjustment: 100.0%
Adjustment Station #: 0
Growth Rate: 0.0%
Number of Years: 0

AM PEAK HOUR PERIOD: **7:15-8:15**
AM PEAK 15 MINUTE PERIOD: **7:30-7:45**
AM PHF: **0.94**

SCHOOL PEAK HOUR PERIOD:
SCHOOL PEAK 15 MINUTE PERIOD:
SCHOOL PHF:

PM PEAK HOUR PERIOD: **17:00-18:00**
PM PEAK 15 MINUTE PERIOD: **17:30-17:45**
PM PHF: **0.98**

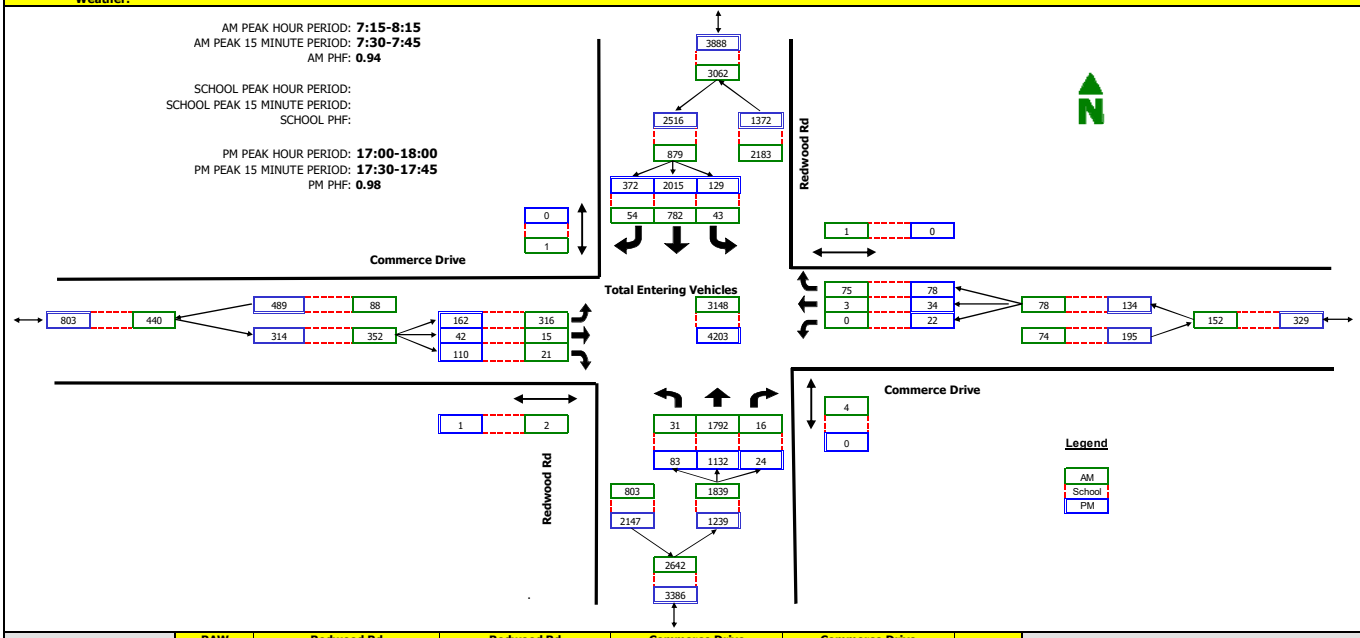

RAW COUNT SUMMARIES	Redwood Rd Northbound				Redwood Rd Southbound				Commerce Drive Eastbound				Commerce Drive Westbound				
	Left	Thru	Right	Peds	Left	Thru	Right	Peds	Left	Thru	Right	Peds	Left	Thru	Right	Peds	
AM PERIOD COUNTS																	
Period	**A**	**B**	**C**	**D**	**E**	**F**	**G**	**H**	**I**	**J**	**K**	**L**	**M**	**N**	**O**	**P**	**TOTAL**
7:00-7:15	5	436	0	1	6	158	9	0	73	2	3	0	2	0	8	0	702
7:15-7:30	9	441	2	1	4	171	10	0	89	1	2	0	0	1	21	0	751
7:30-7:45	6	493	4	2	13	186	9	0	94	5	2	1	0	0	21	0	833
7:45-8:00	10	431	4	1	15	235	17	1	68	6	12	0	0	2	17	1	817
8:00-8:15	6	427	6	0	11	190	18	0	65	3	5	1	0	0	16	0	747
8:15-8:30	5	371	4	1	11	191	14	0	49	3	5	0	1	0	14	0	668
8:30-8:45	14	398	5	0	12	178	18	0	53	5	3	3	1	3	25	1	715
8:45-9:00	17	370	4	0	15	194	15	0	42	7	5	1	1	3	17	3	690
MIDDAY PERIOD COUNTS																	
Period	**A**	**B**	**C**	**D**	**E**	**F**	**G**	**H**	**I**	**J**	**K**	**L**	**M**	**N**	**O**	**P**	**TOTAL**
9:00-9:15	0	0	0	0	0	0	0	0	0	0	0	0	0	0	0	0	0
9:15-9:30	0	0	0	0	0	0	0	0	0	0	0	0	0	0	0	0	0
9:30-9:45	0	0	0	0	0	0	0	0	0	0	0	0	0	0	0	0	0
9:45-10:00	0	0	0	0	0	0	0	0	0	0	0	0	0	0	0	0	0
10:00-10:15	0	0	0	0	0	0	0	0	0	0	0	0	0	0	0	0	0
10:15-10:30	0	0	0	0	0	0	0	0	0	0	0	0	0	0	0	0	0
10:30-10:45	0	0	0	0	0	0	0	0	0	0	0	0	0	0	0	0	0
10:45-11:00	0	0	0	0	0	0	0	0	0	0	0	0	0	0	0	0	0
11:00-11:15	0	0	0	0	0	0	0	0	0	0	0	0	0	0	0	0	0
11:15-11:30	0	0	0	0	0	0	0	0	0	0	0	0	0	0	0	0	0
11:30-11:45	0	0	0	0	0	0	0	0	0	0	0	0	0	0	0	0	0
11:45-12:00	0	0	0	0	0	0	0	0	0	0	0	0	0	0	0	0	0
12:00-12:15	0	0	0	0	0	0	0	0	0	0	0	0	0	0	0	0	0
12:15-12:30	0	0	0	0	0	0	0	0	0	0	0	0	0	0	0	0	0
12:30-12:45	0	0	0	0	0	0	0	0	0	0	0	0	0	0	0	0	0
12:45-13:00	0	0	0	0	0	0	0	0	0	0	0	0	0	0	0	0	0
13:00-13:15	0	0	0	0	0	0	0	0	0	0	0	0	0	0	0	0	0
13:15-13:30	0	0	0	0	0	0	0	0	0	0	0	0	0	0	0	0	0
13:30-13:45	0	0	0	0	0	0	0	0	0	0	0	0	0	0	0	0	0
13:45-14:00	0	0	0	0	0	0	0	0	0	0	0	0	0	0	0	0	0
14:00-14:15	0	0	0	0	0	0	0	0	0	0	0	0	0	0	0	0	0
14:15-14:30	0	0	0	0	0	0	0	0	0	0	0	0	0	0	0	0	0
14:30-14:45	0	0	0	0	0	0	0	0	0	0	0	0	0	0	0	0	0
14:45-15:00	0	0	0	0	0	0	0	0	0	0	0	0	0	0	0	0	0
15:00-15:15	0	0	0	0	0	0	0	0	0	0	0	0	0	0	0	0	0
15:15-15:30	0	0	0	0	0	0	0	0	0	0	0	0	0	0	0	0	0
15:30-15:45	0	0	0	0	0	0	0	0	0	0	0	0	0	0	0	0	0
15:45-16:00	0	0	0	0	0	0	0	0	0	0	0	0	0	0	0	0	0
PM PERIOD COUNTS																	
Period	**A**	**B**	**C**	**D**	**E**	**F**	**G**	**H**	**I**	**J**	**K**	**L**	**M**	**N**	**O**	**P**	**TOTAL**
16:00-16:15	13	244	4	0	20	356	40	0	55	11	18	1	7	6	7	1	781
16:15-16:30	18	253	4	1	15	431	74	0	40	10	10	1	3	4	15	0	877
16:30-16:45	12	290	5	1	18	488	66	0	37	8	23	0	1	7	16	0	971
16:45-17:00	12	258	5	1	35	500	90	0	42	11	20	1	5	7	19	0	1004
17:00-17:15	30	275	12	0	22	497	103	0	32	14	21	0	9	8	19	0	1042
17:15-17:30	25	282	4	0	42	522	68	0	38	9	24	0	8	7	27	0	1056
17:30-17:45	14	300	3	0	33	498	102	0	51	10	41	0	1	6	16	0	1075
17:45-18:00	14	275	5	0	32	498	99	0	41	9	24	1	4	13	16	0	1030

TrafficCounts

2364 North 1450 East
Lehi, UT 84043
801.636.0891

Intersection Turning Movement Summary

Intersection: Redwood Road / Crossroads Blvd
North/South: Redwood Road
East/West: Crossroads Blvd
Jurisdiction: Saratoga Springs
Project Title: Cold Spring Ranch TIS
Project No: UT16-928
Weather:

Date: 8-11-16, Thu
Day of Week Adjustment: 100.0%
Month of Year Adjustment: 100.0%
Adjustment Station #: 0
Growth Rate: 0.0%
Number of Years: 0

AM PEAK HOUR PERIOD: **7:15-8:15**
AM PEAK 15 MINUTE PERIOD: **7:30-7:45**
AM PHF: **0.92**

SCHOOL PEAK HOUR PERIOD:
SCHOOL PEAK 15 MINUTE PERIOD:
SCHOOL PHF:

PM PEAK HOUR PERIOD: **16:45-17:45**
PM PEAK 15 MINUTE PERIOD: **17:30-17:45**
PM PHF: **0.95**

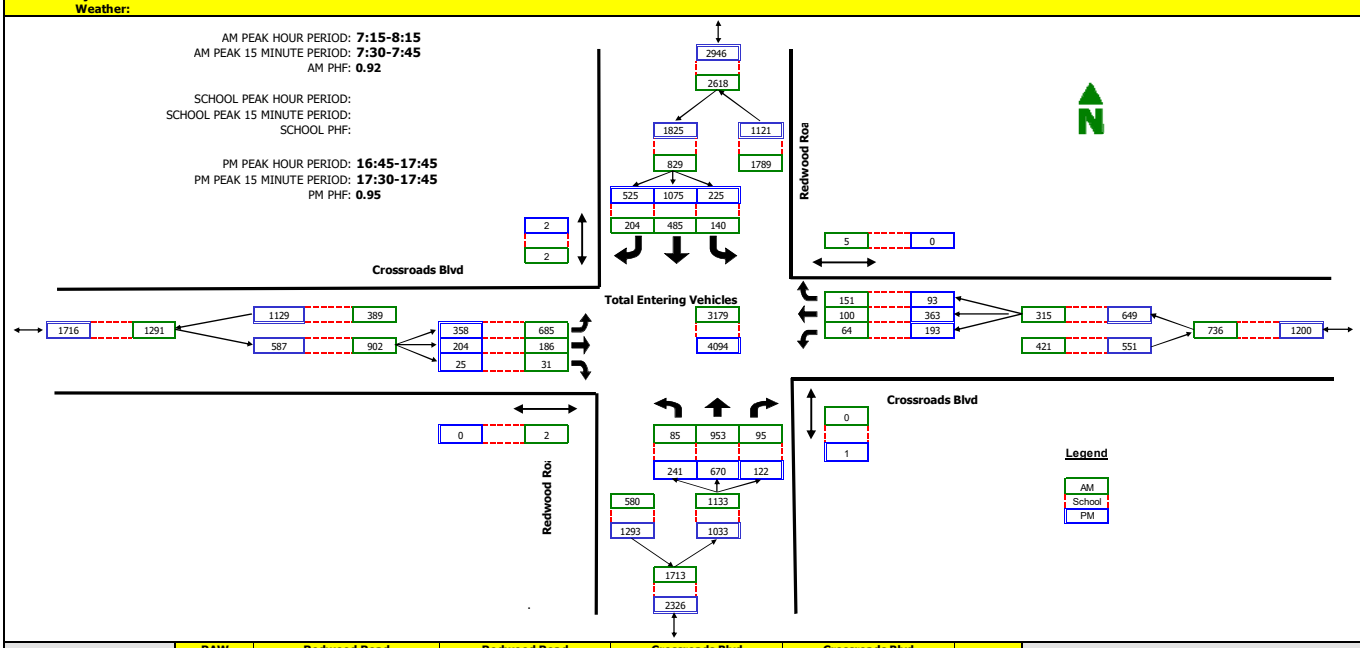

RAW COUNT SUMMARIES	Redwood Road Northbound				Redwood Road Southbound				Crossroads Blvd Eastbound				Crossroads Blvd Westbound				
	Left	Thru	Right	Peds	Left	Thru	Right	Peds	Left	Thru	Right	Peds	Left	Thru	Right	Peds	
AM PERIOD COUNTS																	
Period	**A**	**B**	**C**	**D**	**E**	**F**	**G**	**H**	**I**	**J**	**K**	**L**	**M**	**N**	**O**	**P**	**TOTAL**
7:00-7:15	17	255	21	1	19	103	36	0	149	29	7	1	16	28	31	1	711
7:15-7:30	26	219	18	0	34	102	53	1	196	55	4	0	19	21	43	4	790
7:30-7:45	17	269	33	0	32	117	52	0	203	52	4	1	16	26	44	0	865
7:45-8:00	20	237	24	0	46	143	49	0	138	36	10	0	18	27	32	1	780
8:00-8:15	22	228	20	0	28	123	50	1	148	43	13	1	11	26	32	0	744
8:15-8:30	18	194	15	0	47	111	55	0	174	36	5	0	26	27	20	0	728
8:30-8:45	42	239	27	2	28	109	49	1	146	37	2	3	26	34	35	0	774
8:45-9:00	23	181	27	0	37	123	63	0	144	52	5	1	28	29	40	0	752
MIDDAY PERIOD COUNTS																	
Period	**A**	**B**	**C**	**D**	**E**	**F**	**G**	**H**	**I**	**J**	**K**	**L**	**M**	**N**	**O**	**P**	**TOTAL**
9:00-9:15	0	0	0	0	0	0	0	0	0	0	0	0	0	0	0	0	0
9:15-9:30	0	0	0	0	0	0	0	0	0	0	0	0	0	0	0	0	0
9:30-9:45	0	0	0	0	0	0	0	0	0	0	0	0	0	0	0	0	0
9:45-10:00	0	0	0	0	0	0	0	0	0	0	0	0	0	0	0	0	0
10:00-10:15	0	0	0	0	0	0	0	0	0	0	0	0	0	0	0	0	0
10:15-10:30	0	0	0	0	0	0	0	0	0	0	0	0	0	0	0	0	0
10:30-10:45	0	0	0	0	0	0	0	0	0	0	0	0	0	0	0	0	0
10:45-11:00	0	0	0	0	0	0	0	0	0	0	0	0	0	0	0	0	0
11:00-11:15	0	0	0	0	0	0	0	0	0	0	0	0	0	0	0	0	0
11:15-11:30	0	0	0	0	0	0	0	0	0	0	0	0	0	0	0	0	0
11:30-11:45	0	0	0	0	0	0	0	0	0	0	0	0	0	0	0	0	0
11:45-12:00	0	0	0	0	0	0	0	0	0	0	0	0	0	0	0	0	0
12:00-12:15	0	0	0	0	0	0	0	0	0	0	0	0	0	0	0	0	0
12:15-12:30	0	0	0	0	0	0	0	0	0	0	0	0	0	0	0	0	0
12:30-12:45	0	0	0	0	0	0	0	0	0	0	0	0	0	0	0	0	0
12:45-13:00	0	0	0	0	0	0	0	0	0	0	0	0	0	0	0	0	0
13:00-13:15	0	0	0	0	0	0	0	0	0	0	0	0	0	0	0	0	0
13:15-13:30	0	0	0	0	0	0	0	0	0	0	0	0	0	0	0	0	0
13:30-13:45	0	0	0	0	0	0	0	0	0	0	0	0	0	0	0	0	0
13:45-14:00	0	0	0	0	0	0	0	0	0	0	0	0	0	0	0	0	0
14:00-14:15	0	0	0	0	0	0	0	0	0	0	0	0	0	0	0	0	0
14:15-14:30	0	0	0	0	0	0	0	0	0	0	0	0	0	0	0	0	0
14:30-14:45	0	0	0	0	0	0	0	0	0	0	0	0	0	0	0	0	0
14:45-15:00	0	0	0	0	0	0	0	0	0	0	0	0	0	0	0	0	0
15:00-15:15	0	0	0	0	0	0	0	0	0	0	0	0	0	0	0	0	0
15:15-15:30	0	0	0	0	0	0	0	0	0	0	0	0	0	0	0	0	0
15:30-15:45	0	0	0	0	0	0	0	0	0	0	0	0	0	0	0	0	0
15:45-16:00	0	0	0	0	0	0	0	0	0	0	0	0	0	0	0	0	0
PM PERIOD COUNTS																	
Period	**A**	**B**	**C**	**D**	**E**	**F**	**G**	**H**	**I**	**J**	**K**	**L**	**M**	**N**	**O**	**P**	**TOTAL**
16:00-16:15	53	129	27	0	39	222	100	1	53	23	8	0	34	58	24	0	770
16:15-16:30	65	160	37	1	56	235	104	1	70	37	3	0	43	82	31	0	923
16:30-16:45	58	158	24	0	62	225	139	2	98	48	5	0	59	110	27	1	1013
16:45-17:00	54	161	29	0	58	242	119	1	81	101	4	0	59	75	22	0	1005
17:00-17:15	76	176	35	0	52	236	120	0	82	45	7	0	45	97	26	0	997
17:15-17:30	48	174	33	1	63	296	150	1	86	26	5	0	40	75	18	0	1014
17:30-17:45	63	159	25	0	52	301	136	0	109	32	9	0	49	116	27	0	1078
17:45-18:00	51	151	29	1	79	248	113	3	75	40	15	0	69	97	27	1	994

TrafficCounts

2364 North 1450 East
Lehi, UT 84043
801.636.0891

Intersection Turning Movement Summary

Intersection: Redwood Rd / Sergeant St
North/South: Redwood Rd
East/West: Sergeant St
Jurisdiction: Saratoga Springs
Project Title: Cold Spring Ranch TIS
Project No: UT16-928
Weather:

Date: 8-11-16, Thu
Day of Week Adjustment: 100.0%
Month of Year Adjustment: 100.0%
Adjustment Station #: 0
Growth Rate: 0.0%
Number of Years: 0

AM PEAK HOUR PERIOD: **8:00-9:00**
AM PEAK 15 MINUTE PERIOD: **8:45-9:00**
AM PHF: **0.66**

SCHOOL PEAK HOUR PERIOD:
SCHOOL PEAK 15 MINUTE PERIOD:
SCHOOL PHF:

PM PEAK HOUR PERIOD: **16:00-17:00**
PM PEAK 15 MINUTE PERIOD: **16:30-16:45**
PM PHF: **0.58**

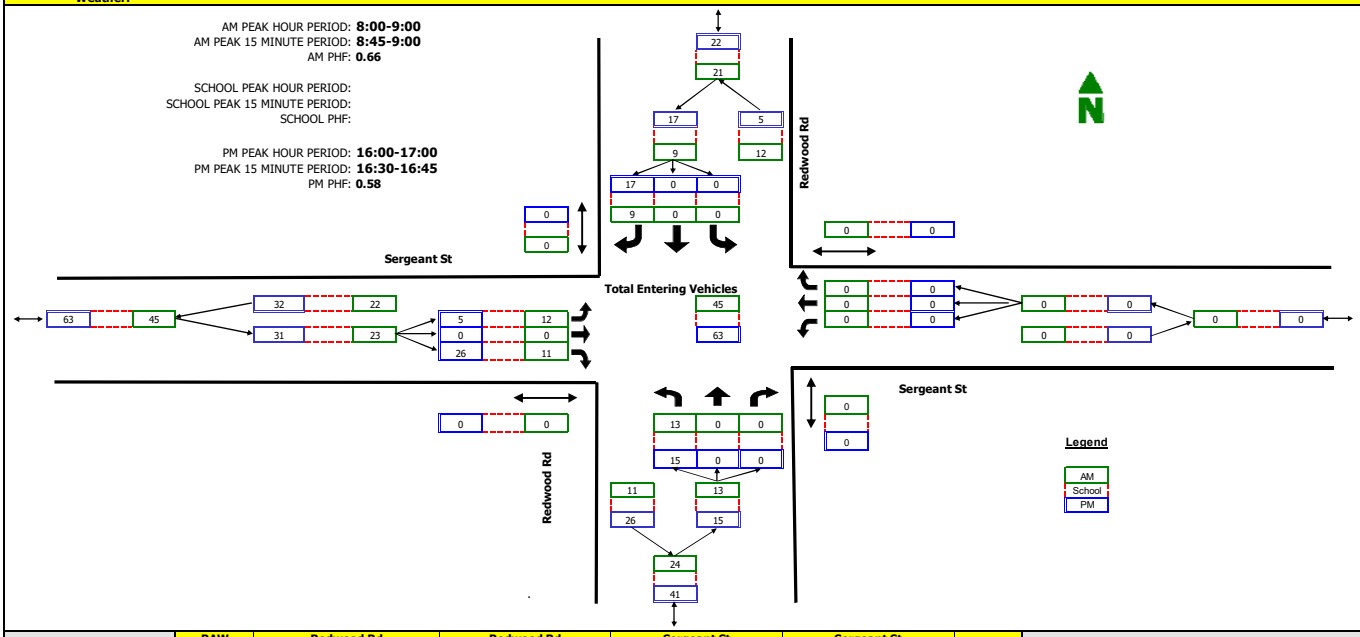

RAW COUNT SUMMARIES	Redwood Rd Northbound				Redwood Rd Southbound				Sergeant St Eastbound				Sergeant St Westbound				
	Left	Thru	Right	Peds	Left	Thru	Right	Peds	Left	Thru	Right	Peds	Left	Thru	Right	Peds	
AM PERIOD COUNTS																	
Period	**A**	**B**	**C**	**D**	**E**	**F**	**G**	**H**	**I**	**J**	**K**	**L**	**M**	**N**	**O**	**P**	**TOTAL**
7:00-7:15	4	0	0	0	0	0	2	0	4	0	6	0	0	0	0	0	16
7:15-7:30	1	0	0	0	0	0	2	0	4	0	5	0	0	0	0	0	12
7:30-7:45	1	0	0	0	0	0	1	0	2	0	0	0	0	0	0	0	4
7:45-8:00	3	0	0	0	0	0	3	0	2	0	2	0	0	0	0	0	10
8:00-8:15	1	0	0	0	0	0	1	0	6	0	3	0	0	0	0	0	11
8:15-8:30	5	0	0	0	0	0	0	0	0	0	3	0	0	0	0	0	8
8:30-8:45	3	0	0	0	0	0	2	0	3	0	1	0	0	0	0	0	9
8:45-9:00	4	0	0	0	0	0	6	0	3	0	4	0	0	0	0	0	17
MIDDAY PERIOD COUNTS																	
Period	**A**	**B**	**C**	**D**	**E**	**F**	**G**	**H**	**I**	**J**	**K**	**L**	**M**	**N**	**O**	**P**	**TOTAL**
9:00-9:15	0	0	0	0	0	0	0	0	0	0	0	0	0	0	0	0	0
9:15-9:30	0	0	0	0	0	0	0	0	0	0	0	0	0	0	0	0	0
9:30-9:45	0	0	0	0	0	0	0	0	0	0	0	0	0	0	0	0	0
9:45-10:00	0	0	0	0	0	0	0	0	0	0	0	0	0	0	0	0	0
10:00-10:15	0	0	0	0	0	0	0	0	0	0	0	0	0	0	0	0	0
10:15-10:30	0	0	0	0	0	0	0	0	0	0	0	0	0	0	0	0	0
10:30-10:45	0	0	0	0	0	0	0	0	0	0	0	0	0	0	0	0	0
10:45-11:00	0	0	0	0	0	0	0	0	0	0	0	0	0	0	0	0	0
11:00-11:15	0	0	0	0	0	0	0	0	0	0	0	0	0	0	0	0	0
11:15-11:30	0	0	0	0	0	0	0	0	0	0	0	0	0	0	0	0	0
11:30-11:45	0	0	0	0	0	0	0	0	0	0	0	0	0	0	0	0	0
11:45-12:00	0	0	0	0	0	0	0	0	0	0	0	0	0	0	0	0	0
12:00-12:15	0	0	0	0	0	0	0	0	0	0	0	0	0	0	0	0	0
12:15-12:30	0	0	0	0	0	0	0	0	0	0	0	0	0	0	0	0	0
12:30-12:45	0	0	0	0	0	0	0	0	0	0	0	0	0	0	0	0	0
12:45-13:00	0	0	0	0	0	0	0	0	0	0	0	0	0	0	0	0	0
13:00-13:15	0	0	0	0	0	0	0	0	0	0	0	0	0	0	0	0	0
13:15-13:30	0	0	0	0	0	0	0	0	0	0	0	0	0	0	0	0	0
13:30-13:45	0	0	0	0	0	0	0	0	0	0	0	0	0	0	0	0	0
13:45-14:00	0	0	0	0	0	0	0	0	0	0	0	0	0	0	0	0	0
14:00-14:15	0	0	0	0	0	0	0	0	0	0	0	0	0	0	0	0	0
14:15-14:30	0	0	0	0	0	0	0	0	0	0	0	0	0	0	0	0	0
14:30-14:45	0	0	0	0	0	0	0	0	0	0	0	0	0	0	0	0	0
14:45-15:00	0	0	0	0	0	0	0	0	0	0	0	0	0	0	0	0	0
15:00-15:15	0	0	0	0	0	0	0	0	0	0	0	0	0	0	0	0	0
15:15-15:30	0	0	0	0	0	0	0	0	0	0	0	0	0	0	0	0	0
15:30-15:45	0	0	0	0	0	0	0	0	0	0	0	0	0	0	0	0	0
15:45-16:00	0	0	0	0	0	0	0	0	0	0	0	0	0	0	0	0	0
PM PERIOD COUNTS																	
Period	**A**	**B**	**C**	**D**	**E**	**F**	**G**	**H**	**I**	**J**	**K**	**L**	**M**	**N**	**O**	**P**	**TOTAL**
16:00-16:15	4	0	0	0	0	0	2	0	0	0	6	0	0	0	0	0	12
16:15-16:30	4	0	0	0	0	0	4	0	1	0	3	0	0	0	0	0	12
16:30-16:45	4	0	0	0	0	0	6	0	4	0	13	0	0	0	0	0	27
16:45-17:00	3	0	0	0	0	0	5	0	0	0	4	0	0	0	0	0	12
17:00-17:15	3	0	0	0	0	0	3	0	0	0	3	0	0	0	0	0	9
17:15-17:30	1	0	0	0	0	0	1	0	0	0	2	0	0	0	0	0	4
17:30-17:45	3	0	0	0	0	0	1	0	1	0	3	0	0	0	0	0	8
17:45-18:00	5	0	0	0	0	0	7	0	0	0	6	0	0	0	0	0	18

TrafficCounts

2364 North 1450 East
Lehi, UT 84043
801.636.0891

Intersection Turning Movement Summary

Intersection: Riverside Dr & 400 East / Crossroads Blvd
North/South: Riverside Dr & 400 East
East/West: Crossroads Blvd
Jurisdiction: Saratoga Springs
Project Title: Cold Spring Ranch TIS
Project No: UT16-928
Weather:

Date: 8-11-16, Thu
Day of Week Adjustment: 100.0%
Month of Year Adjustment: 100.0%
Adjustment Station #: 0
Growth Rate: 0.0%
Number of Years: 0

AM PEAK HOUR PERIOD: **7:15-8:15**
AM PEAK 15 MINUTE PERIOD: **7:30-7:45**
AM PHF: **0.94**

SCHOOL PEAK HOUR PERIOD:
SCHOOL PEAK 15 MINUTE PERIOD:
SCHOOL PHF:

PM PEAK HOUR PERIOD: **16:45-17:45**
PM PEAK 15 MINUTE PERIOD: **17:15-17:30**
PM PHF: **0.94**

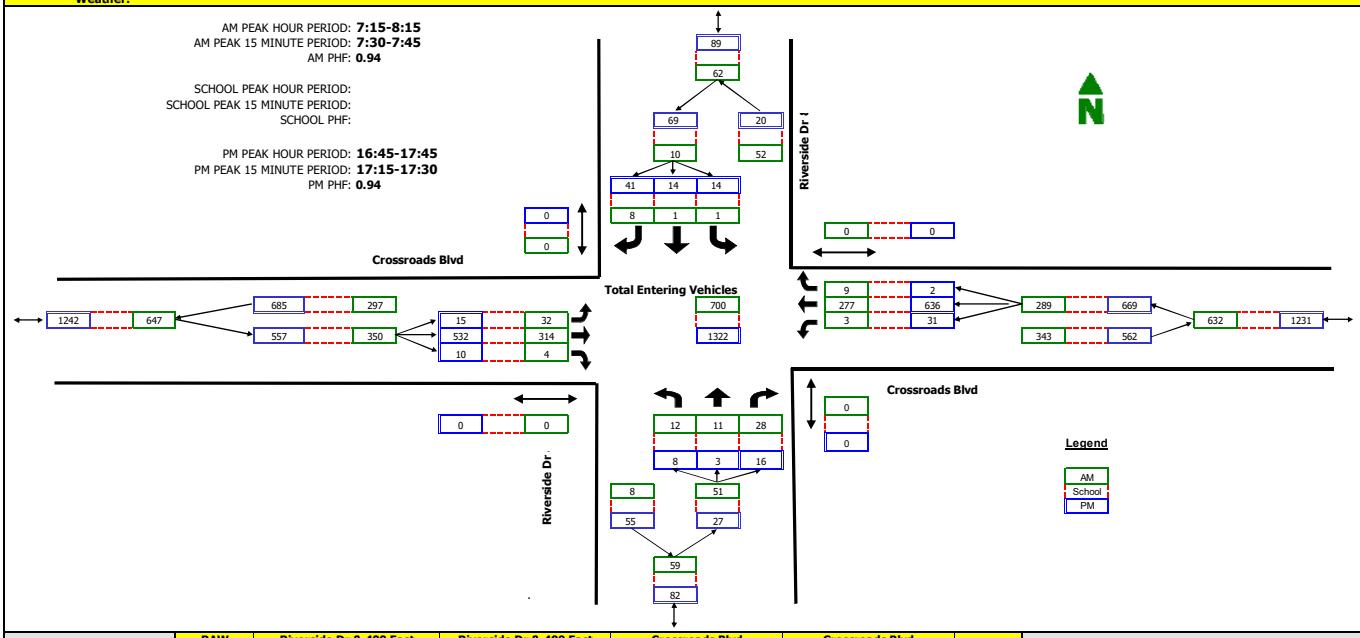

RAW COUNT SUMMARIES	Riverside Dr & 400 East Northbound Left	Thru	Right	Peds	Riverside Dr & 400 East Southbound Left	Thru	Right	Peds	Crossroads Blvd Eastbound Left	Thru	Right	Peds	Crossroads Blvd Westbound Left	Thru	Right	Peds	
AM PERIOD COUNTS																	
Period	**A**	**B**	**C**	**D**	**E**	**F**	**G**	**H**	**I**	**J**	**K**	**L**	**M**	**N**	**O**	**P**	**TOTAL**
7:00-7:15	0	1	3	0	2	1	2	0	9	50	0	0	1	75	2	0	146
7:15-7:30	2	2	8	0	1	0	3	0	9	67	1	0	0	71	2	0	166
7:30-7:45	0	5	6	0	0	1	1	0	9	85	1	0	2	74	2	0	186
7:45-8:00	2	2	10	0	0	0	4	0	7	75	1	0	1	66	2	0	170
8:00-8:15	8	2	4	0	0	0	0	0	7	87	1	0	0	66	3	0	178
8:15-8:30	3	5	7	0	2	0	3	0	3	75	2	0	0	65	1	0	166
8:30-8:45	0	5	6	0	0	0	5	0	5	80	0	0	1	77	1	0	180
8:45-9:00	1	2	2	0	0	0	3	0	5	85	0	0	0	59	1	0	158
MIDDAY PERIOD COUNTS																	
Period	**A**	**B**	**C**	**D**	**E**	**F**	**G**	**H**	**I**	**J**	**K**	**L**	**M**	**N**	**O**	**P**	**TOTAL**
9:00-9:15	0	0	0	0	0	0	0	0	0	0	0	0	0	0	0	0	0
9:15-9:30	0	0	0	0	0	0	0	0	0	0	0	0	0	0	0	0	0
9:30-9:45	0	0	0	0	0	0	0	0	0	0	0	0	0	0	0	0	0
9:45-10:00	0	0	0	0	0	0	0	0	0	0	0	0	0	0	0	0	0
10:00-10:15	0	0	0	0	0	0	0	0	0	0	0	0	0	0	0	0	0
10:15-10:30	0	0	0	0	0	0	0	0	0	0	0	0	0	0	0	0	0
10:30-10:45	0	0	0	0	0	0	0	0	0	0	0	0	0	0	0	0	0
10:45-11:00	0	0	0	0	0	0	0	0	0	0	0	0	0	0	0	0	0
11:00-11:15	0	0	0	0	0	0	0	0	0	0	0	0	0	0	0	0	0
11:15-11:30	0	0	0	0	0	0	0	0	0	0	0	0	0	0	0	0	0
11:30-11:45	0	0	0	0	0	0	0	0	0	0	0	0	0	0	0	0	0
11:45-12:00	0	0	0	0	0	0	0	0	0	0	0	0	0	0	0	0	0
12:00-12:15	0	0	0	0	0	0	0	0	0	0	0	0	0	0	0	0	0
12:15-12:30	0	0	0	0	0	0	0	0	0	0	0	0	0	0	0	0	0
12:30-12:45	0	0	0	0	0	0	0	0	0	0	0	0	0	0	0	0	0
12:45-13:00	0	0	0	0	0	0	0	0	0	0	0	0	0	0	0	0	0
13:00-13:15	0	0	0	0	0	0	0	0	0	0	0	0	0	0	0	0	0
13:15-13:30	0	0	0	0	0	0	0	0	0	0	0	0	0	0	0	0	0
13:30-13:45	0	0	0	0	0	0	0	0	0	0	0	0	0	0	0	0	0
13:45-14:00	0	0	0	0	0	0	0	0	0	0	0	0	0	0	0	0	0
14:00-14:15	0	0	0	0	0	0	0	0	0	0	0	0	0	0	0	0	0
14:15-14:30	0	0	0	0	0	0	0	0	0	0	0	0	0	0	0	0	0
14:30-14:45	0	0	0	0	0	0	0	0	0	0	0	0	0	0	0	0	0
14:45-15:00	0	0	0	0	0	0	0	0	0	0	0	0	0	0	0	0	0
15:00-15:15	0	0	0	0	0	0	0	0	0	0	0	0	0	0	0	0	0
15:15-15:30	0	0	0	0	0	0	0	0	0	0	0	0	0	0	0	0	0
15:30-15:45	0	0	0	0	0	0	0	0	0	0	0	0	0	0	0	0	0
15:45-16:00	0	0	0	0	0	0	0	0	0	0	0	0	0	0	0	0	0
PM PERIOD COUNTS																	
Period	**A**	**B**	**C**	**D**	**E**	**F**	**G**	**H**	**I**	**J**	**K**	**L**	**M**	**N**	**O**	**P**	**TOTAL**
16:00-16:15	1	0	4	0	0	0	3	0	3	126	2	0	2	122	2	0	265
16:15-16:30	3	1	2	0	0	0	11	0	2	123	7	0	6	154	1	0	310
16:30-16:45	2	0	7	0	1	0	13	0	9	119	4	1	5	173	2	0	335
16:45-17:00	2	0	3	0	4	4	6	0	7	132	3	0	8	157	0	0	326
17:00-17:15	3	2	4	0	2	4	7	0	2	129	2	0	9	139	0	0	303
17:15-17:30	0	1	1	0	3	3	8	0	5	142	4	0	6	177	0	0	350
17:30-17:45	3	0	8	0	5	3	20	0	1	129	1	0	8	163	2	0	343
17:45-18:00	3	0	3	0	2	4	15	0	4	139	2	0	11	142	1	0	326

HALES ENGINEERING
innovative transportation solutions

APPENDIX B

LOS Results

HALES ENGINEERING
innovative transportation solutions

SimTraffic LOS Report

Project: Saratoga Springs - Cold Spring Ranch
Analysis Period: *Existing (2016) Background*
Time Period: *Evening Peak Hour* **Project #:** *UT16-928*

Intersection: Redwood Road & Crossroads Blvd
Type: Signalized

Approach	Movement	Demand Volume	Volume Served		Delay/Veh (sec)	
			Avg	%	Avg	LOS
NB	L	241	237	98	60.6	*E*
	T	750	770	103	28.7	*C*
	R	122	123	101	3.9	*A*
	Subtotal	1,113	1,130	102	32.7	*C*
SB	L	250	242	97	72.1	*E*
	T	1,287	1,271	99	28.3	*C*
	R	550	542	99	12.4	*B*
	Subtotal	2,087	2,055	98	29.3	*C*
EB	L	358	353	99	51.6	*D*
	T	204	196	96	43.3	*D*
	R	25	28	111	14.3	*B*
	Subtotal	587	577	98	47.0	*D*
WB	L	193	196	101	57.5	*E*
	T	364	361	99	52.4	*D*
	R	120	125	104	12.8	*B*
	Subtotal	677	682	101	46.6	*D*
Total		4,464	4,444	100	35.2	*D*

Intersection: Redwood Road & Commerce Drive
Type: Signalized

Approach	Movement	Demand Volume	Volume Served		Delay/Veh (sec)	
			Avg	%	Avg	LOS
NB	L	83	80	96	40.1	*D*
	T	1,166	1,178	101	22.9	*C*
	R	24	27	111	7.7	*A*
	Subtotal	1,273	1,285	101	23.7	*C*
SB	L	129	137	106	60.0	*E*
	T	1,992	1,954	98	19.1	*B*
	R	372	371	100	11.9	*B*
	Subtotal	2,493	2,462	99	20.3	*C*
EB	L	162	162	100	56.6	*E*
	T	42	42	101	45.5	*D*
	R	90	91	101	17.0	*B*
	Subtotal	294	295	100	42.8	*D*
WB	L	22	26	117	50.1	*D*
	T	34	35	104	43.0	*D*
	R	78	78	100	13.5	*B*
	Subtotal	134	139	104	27.8	*C*
Total		4,194	4,181	100	23.3	*C*

HALES ENGINEERING
innovative transportation solutions

SimTraffic LOS Report

Project: Saratoga Springs - Cold Spring Ranch
Analysis Period: *Existing (2016) Background*
Time Period: *Evening Peak Hour* **Project #:** *UT16-928*

Intersection: Redwood Road & Aspen Hills Blvd
Type: Unsignalized

Approach	Movement	Demand Volume	Volume Served		Delay/Veh (sec)	
			Avg	%	Avg	LOS
NB	L	23	22	95	75.3	*F*
	T	1,340	1,352	101	1.2	*A*
	Subtotal	1,363	1,374	101	2.4	*A*
SB	T	2,383	2,362	99	4.0	*A*
	R	50	50	100	1.7	*A*
	Subtotal	2,433	2,412	99	4.0	*A*
EB	L	9	8	89	288.9	*F*
	R	24	24	100	206.8	*F*
	Subtotal	***33***	***32***	***97***	***227.3***	***F***
Total		3,829	3,818	100	5.4	*A*

Intersection: Redwood Road & Sergeant Court Drive
Type: Unsignalized

Approach	Movement	Demand Volume	Volume Served		Delay/Veh (sec)	
			Avg	%	Avg	LOS
NB	L	15	15	98	143.1	*F*
	T	1,402	1,413	101	3.3	*A*
	Subtotal	1,417	1,428	101	4.8	*A*
SB	T	2,390	2,366	99	3.6	*A*
	R	17	18	104	0.6	*A*
	Subtotal	2,407	2,384	99	3.6	*A*
EB	L	5	4	80	409.9	*F*
	R	26	27	103	194.7	*F*
	Subtotal	***31***	***31***	***100***	***222.5***	***F***
Total		3,856	3,843	100	6.1	*A*

HALES ENGINEERING
innovative transportation solutions

SimTraffic LOS Report

Project: Saratoga Springs - Cold Spring Ranch
Analysis Period: *Existing (2016) Background*
Time Period: *Evening Peak Hour* **Project #:** *UT16-928*

Intersection: 3600 West & 2100 North WB
Type: Unsignalized

Approach	Movement	Demand Volume	Volume Served		Delay/Veh (sec)	
			Avg	%	Avg	LOS
NB	L	7	6	86	19.6	*C*
	T	1	1	100	27.7	*D*
	Subtotal	8	7	88	20.8	*C*
SB	T	21	23	108	27.1	*D*
	R	1	1	100	8.6	*A*
	Subtotal	***22***	***24***	***109***	***26.3***	***D***
WB	L	66	68	103	0.1	*A*
	T	1,751	1,750	100	0.2	*A*
	R	4	4	100	0.0	*A*
	Subtotal	1,821	1,822	100	0.2	*A*
Total		1,851	1,853	100	0.6	*A*

Intersection: 3600 West & 2100 North EB
Type: Unsignalized

Approach	Movement	Demand Volume	Volume Served		Delay/Veh (sec)	
			Avg	%	Avg	LOS
NB	T	7	6	86	11.0	*B*
	R	57	57	100	5.2	*A*
	Subtotal	64	63	98	5.8	*A*
SB	L	13	12	91	10.9	*B*
	T	74	78	105	12.7	*B*
	Subtotal	***87***	***90***	***103***	***12.5***	***B***
EB	L	1	1	100	0.0	*A*
	T	954	956	100	0.2	*A*
	R	10	11	107	0.0	*A*
	Subtotal	965	968	100	0.2	*A*
Total		1,116	1,121	100	1.5	*A*

HALES ENGINEERING
innovative transportation solutions

SimTraffic LOS Report

Project: Saratoga Springs - Cold Spring Ranch
Analysis Period: *Existing (2016) Background*
Time Period: *Evening Peak Hour* **Project #:** *UT16-928*

Intersection: 400 East & Crossroads Blvd
Type: Unsignalized

Approach	Movement	Demand Volume	Volume Served		Delay/Veh (sec)	
			Avg	%	Avg	LOS
NB	L	8	8	100	16.5	*C*
	T	3	3	100	13.0	*B*
	R	16	19	117	5.9	*A*
	Subtotal	27	30	111	9.4	*A*
SB	L	14	13	91	20.0	*C*
	T	14	14	98	17.8	*C*
	R	41	43	106	8.1	*A*
	Subtotal	***69***	***70***	***101***	***12.3***	***B***
EB	L	15	15	98	5.5	*A*
	T	533	519	97	1.8	*A*
	R	10	10	98	0.8	*A*
	Subtotal	558	544	97	1.9	*A*
WB	L	31	29	94	5.9	*A*
	T	627	636	101	2.5	*A*
	R	2	2	100	1.3	*A*
	Subtotal	660	667	101	2.6	*A*
Total		1,315	1,311	100	3.0	*A*

2: Redwood Road & Crossroads Blvd Performance by movement Interval #1 5:00

Movement	EBL	EBT	EBR	WBL	WBT	WBR	NBL	NBT	NBR	SBL	SBT	SBR
Denied Delay (hr)	0.1	0.0	0.0	0.0	0.0	0.0	0.0	0.0	0.0	0.0	0.0	0.0
Denied Del/Veh (s)	2.7	0.3	3.2	0.0	0.0	0.0	2.7	0.3	2.5	0.1	0.0	0.0
Total Delay (hr)	1.3	0.7	0.0	0.8	1.3	0.1	1.0	1.3	0.0	1.2	2.1	0.4
Total Del/Veh (s)	51.2	45.5	13.7	54.4	50.3	13.6	54.2	24.9	3.8	71.1	23.5	10.8
Vehicles Entered	86	48	9	49	85	30	58	177	31	59	308	128
Vehicles Exited	87	50	9	51	88	31	59	179	31	55	306	128
Hourly Exit Rate	348	200	36	204	352	124	236	716	124	220	1224	512
Input Volume	352	200	25	190	357	118	237	737	120	246	1264	540
% of Volume	99	100	144	107	99	105	100	97	103	89	97	95

2: Redwood Road & Crossroads Blvd Performance by movement Interval #1 5:00

Movement	All
Denied Delay (hr)	0.2
Denied Del/Veh (s)	0.5
Total Delay (hr)	10.3
Total Del/Veh (s)	32.5
Vehicles Entered	1068
Vehicles Exited	1074
Hourly Exit Rate	4296
Input Volume	4386
% of Volume	98

2: Redwood Road & Crossroads Blvd Performance by movement Interval #2 5:15

Movement	EBL	EBT	EBR	WBL	WBT	WBR	NBL	NBT	NBR	SBL	SBT	SBR
Denied Delay (hr)	0.1	0.0	0.0	0.0	0.0	0.0	0.0	0.0	0.0	0.0	0.0	0.0
Denied Del/Veh (s)	2.6	0.3	3.3	0.0	0.0	0.0	2.5	0.4	2.5	0.2	0.0	0.0
Total Delay (hr)	1.4	0.6	0.0	0.8	1.5	0.1	1.1	1.7	0.0	1.2	2.7	0.5
Total Del/Veh (s)	49.0	40.5	14.2	55.8	49.5	12.8	59.0	28.3	4.2	65.8	28.0	12.3
Vehicles Entered	98	48	7	50	101	30	63	204	30	58	321	138
Vehicles Exited	85	43	7	50	103	29	63	209	31	59	329	140
Hourly Exit Rate	340	172	28	200	412	116	252	836	124	236	1316	560
Input Volume	377	215	26	203	384	126	254	789	128	263	1355	579
% of Volume	90	80	108	99	107	92	99	106	97	90	97	97

2: Redwood Road & Crossroads Blvd Performance by movement Interval #2 5:15

Movement	All
Denied Delay (hr)	0.2
Denied Del/Veh (s)	0.5
Total Delay (hr)	11.6
Total Del/Veh (s)	34.3
Vehicles Entered	1148
Vehicles Exited	1148
Hourly Exit Rate	4592
Input Volume	4699
% of Volume	98

2: Redwood Road & Crossroads Blvd Performance by movement Interval #3 5:30

Movement	EBL	EBT	EBR	WBL	WBT	WBR	NBL	NBT	NBR	SBL	SBT	SBR
Denied Delay (hr)	0.1	0.0	0.0	0.0	0.0	0.0	0.0	0.0	0.0	0.0	0.0	0.0
Denied Del/Veh (s)	2.7	0.2	3.1	0.0	0.0	0.0	2.6	0.4	2.6	0.2	0.0	0.0
Total Delay (hr)	1.3	0.6	0.0	0.8	1.3	0.1	1.1	1.7	0.0	1.3	2.5	0.6
Total Del/Veh (s)	44.5	37.2	14.1	55.7	52.2	12.8	59.8	29.7	3.7	63.2	27.2	13.8
Vehicles Entered	89	50	6	50	89	33	60	197	31	67	314	145
Vehicles Exited	95	50	6	43	80	32	62	202	31	66	320	143
Hourly Exit Rate	380	200	24	172	320	128	248	808	124	264	1280	572
Input Volume	352	200	25	190	357	118	237	737	120	246	1264	540
% of Volume	108	100	96	91	90	108	105	110	103	107	101	106

2: Redwood Road & Crossroads Blvd Performance by movement Interval #3 5:30

Movement	All
Denied Delay (hr)	0.2
Denied Del/Veh (s)	0.5
Total Delay (hr)	11.3
Total Del/Veh (s)	34.1
Vehicles Entered	1131
Vehicles Exited	1130
Hourly Exit Rate	4520
Input Volume	4386
% of Volume	103

2: Redwood Road & Crossroads Blvd Performance by movement Interval #4 5:45

Movement	EBL	EBT	EBR	WBL	WBT	WBR	NBL	NBT	NBR	SBL	SBT	SBR
Denied Delay (hr)	0.1	0.0	0.0	0.0	0.0	0.0	0.0	0.0	0.0	0.0	0.0	0.0
Denied Del/Veh (s)	2.7	0.3	3.1	0.0	0.0	0.0	2.6	0.4	2.6	0.2	0.0	0.0
Total Delay (hr)	1.2	0.6	0.0	0.8	1.3	0.1	1.0	1.4	0.0	1.2	2.8	0.4
Total Del/Veh (s)	45.6	39.6	10.9	51.3	47.7	10.4	58.1	28.2	3.5	65.4	30.4	11.5
Vehicles Entered	82	51	6	49	88	32	58	181	31	60	320	132
Vehicles Exited	85	52	5	52	90	33	52	180	30	62	317	132
Hourly Exit Rate	340	208	20	208	360	132	208	720	120	248	1268	528
Input Volume	352	200	25	190	357	118	237	737	120	246	1264	540
% of Volume	97	104	80	109	101	112	88	98	100	101	100	98

2: Redwood Road & Crossroads Blvd Performance by movement Interval #4 5:45

Movement	All
Denied Delay (hr)	0.2
Denied Del/Veh (s)	0.5
Total Delay (hr)	10.9
Total Del/Veh (s)	34.1
Vehicles Entered	1090
Vehicles Exited	1090
Hourly Exit Rate	4360
Input Volume	4386
% of Volume	99

2: Redwood Road & Crossroads Blvd Performance by movement Entire Run

Movement	EBL	EBT	EBR	WBL	WBT	WBR	NBL	NBT	NBR	SBL	SBT	SBR
Denied Delay (hr)	0.3	0.0	0.0	0.0	0.0	0.0	0.2	0.1	0.1	0.0	0.0	0.0
Denied Del/Veh (s)	2.7	0.3	3.2	0.0	0.0	0.0	2.6	0.4	2.5	0.2	0.0	0.0
Total Delay (hr)	5.2	2.4	0.1	3.2	5.4	0.4	4.1	6.2	0.1	5.0	10.1	1.9
Total Del/Veh (s)	51.6	43.3	14.3	57.5	52.4	12.8	60.6	28.7	3.9	72.1	28.3	12.4
Vehicles Entered	356	197	28	197	364	125	238	759	123	244	1263	543
Vehicles Exited	353	196	28	196	361	125	237	770	123	242	1271	542
Hourly Exit Rate	353	196	28	196	361	125	237	770	123	242	1271	542
Input Volume	358	204	25	193	364	120	241	750	122	250	1287	550
% of Volume	99	96	111	101	99	104	98	103	101	97	99	99

2: Redwood Road & Crossroads Blvd Performance by movement Entire Run

Movement	All
Denied Delay (hr)	0.7
Denied Del/Veh (s)	0.5
Total Delay (hr)	44.1
Total Del/Veh (s)	35.2
Vehicles Entered	4437
Vehicles Exited	4444
Hourly Exit Rate	4444
Input Volume	4464
% of Volume	100

3: Redwood Road & Commerce Drive Performance by movement Interval #1 5:00

Movement	EBL	EBT	EBR	WBL	WBT	WBR	NBL	NBT	NBR	SBL	SBT	SBR
Denied Delay (hr)	0.0	0.0	0.0	0.0	0.0	0.0	0.0	0.0	0.0	0.0	0.0	0.0
Denied Del/Veh (s)	2.7	0.8	2.7	3.8	0.5	3.9	0.0	0.0	0.0	0.0	0.2	0.3
Total Delay (hr)	0.6	0.1	0.1	0.1	0.1	0.1	0.2	1.6	0.0	0.6	2.1	0.2
Total Del/Veh (s)	50.3	44.8	15.4	49.1	39.9	10.6	38.9	20.6	7.2	58.3	15.7	9.0
Vehicles Entered	38	11	24	7	8	18	19	280	7	35	482	89
Vehicles Exited	40	11	24	7	9	18	20	267	7	36	468	88
Hourly Exit Rate	160	44	96	28	36	72	80	1068	28	144	1872	352
Input Volume	159	41	88	22	33	77	82	1146	24	127	1957	365
% of Volume	101	107	109	127	109	94	98	93	117	113	96	96

3: Redwood Road & Commerce Drive Performance by movement Interval #1 5:00

Movement	All
Denied Delay (hr)	0.1
Denied Del/Veh (s)	0.4
Total Delay (hr)	6.0
Total Del/Veh (s)	20.5
Vehicles Entered	1018
Vehicles Exited	995
Hourly Exit Rate	3980
Input Volume	4121
% of Volume	97

3: Redwood Road & Commerce Drive Performance by movement Interval #2 5:15

Movement	EBL	EBT	EBR	WBL	WBT	WBR	NBL	NBT	NBR	SBL	SBT	SBR
Denied Delay (hr)	0.0	0.0	0.0	0.0	0.0	0.0	0.0	0.0	0.0	0.0	0.1	0.0
Denied Del/Veh (s)	2.6	0.6	2.6	4.0	0.4	3.9	0.1	0.0	0.5	0.0	0.9	0.5
Total Delay (hr)	0.7	0.1	0.1	0.1	0.1	0.1	0.2	2.0	0.0	0.6	2.7	0.3
Total Del/Veh (s)	54.7	41.4	14.8	56.4	39.3	15.2	37.6	22.6	6.5	57.5	18.8	11.7
Vehicles Entered	41	10	23	6	9	21	22	306	6	33	498	92
Vehicles Exited	42	11	24	6	9	22	21	307	7	32	493	92
Hourly Exit Rate	168	44	96	24	36	88	84	1228	28	128	1972	368
Input Volume	171	44	95	23	36	82	87	1228	25	136	2096	392
% of Volume	98	100	101	104	100	107	97	100	112	94	94	94

3: Redwood Road & Commerce Drive Performance by movement Interval #2 5:15

Movement	All
Denied Delay (hr)	0.2
Denied Del/Veh (s)	0.7
Total Delay (hr)	7.1
Total Del/Veh (s)	22.7
Vehicles Entered	1067
Vehicles Exited	1066
Hourly Exit Rate	4264
Input Volume	4415
% of Volume	97

3: Redwood Road & Commerce Drive Performance by movement Interval #3 5:30

Movement	EBL	EBT	EBR	WBL	WBT	WBR	NBL	NBT	NBR	SBL	SBT	SBR
Denied Delay (hr)	0.0	0.0	0.0	0.0	0.0	0.0	0.0	0.0	0.0	0.0	0.1	0.0
Denied Del/Veh (s)	2.7	0.6	2.7	4.2	0.4	3.9	0.1	0.0	0.0	0.6	1.0	0.5
Total Delay (hr)	0.7	0.1	0.1	0.1	0.1	0.1	0.2	2.1	0.0	0.6	3.3	0.5
Total Del/Veh (s)	53.7	43.9	18.1	52.3	46.0	13.9	37.9	23.0	7.4	54.7	23.1	16.0
Vehicles Entered	43	10	22	6	9	20	22	314	6	36	489	99
Vehicles Exited	40	10	22	6	9	20	21	315	6	34	501	99
Hourly Exit Rate	160	40	88	24	36	80	84	1260	24	136	2004	396
Input Volume	159	41	88	22	33	77	82	1146	24	127	1957	365
% of Volume	101	98	100	109	109	104	102	110	100	107	102	108

3: Redwood Road & Commerce Drive Performance by movement Interval #3 5:30

Movement	All
Denied Delay (hr)	0.2
Denied Del/Veh (s)	0.8
Total Delay (hr)	8.0
Total Del/Veh (s)	25.3
Vehicles Entered	1076
Vehicles Exited	1083
Hourly Exit Rate	4332
Input Volume	4121
% of Volume	105

3: Redwood Road & Commerce Drive Performance by movement Interval #4 5:45

Movement	EBL	EBT	EBR	WBL	WBT	WBR	NBL	NBT	NBR	SBL	SBT	SBR
Denied Delay (hr)	0.0	0.0	0.0	0.0	0.0	0.0	0.0	0.0	0.0	0.0	0.1	0.0
Denied Del/Veh (s)	2.6	0.5	2.5	4.2	0.5	3.9	0.0	0.0	0.0	0.0	0.5	0.7
Total Delay (hr)	0.7	0.1	0.1	0.1	0.1	0.1	0.2	1.8	0.0	0.6	2.3	0.3
Total Del/Veh (s)	52.4	43.9	17.8	43.4	42.1	13.3	36.5	21.1	8.7	55.2	16.2	9.6
Vehicles Entered	42	11	22	7	9	19	18	283	7	35	486	91
Vehicles Exited	40	10	21	7	8	18	17	289	6	35	493	92
Hourly Exit Rate	160	40	84	28	32	72	68	1156	24	140	1972	368
Input Volume	159	41	88	22	33	77	82	1146	24	127	1957	365
% of Volume	101	98	95	127	97	94	83	101	100	110	101	101

3: Redwood Road & Commerce Drive Performance by movement Interval #4 5:45

Movement	All
Denied Delay (hr)	0.2
Denied Del/Veh (s)	0.6
Total Delay (hr)	6.3
Total Del/Veh (s)	21.0
Vehicles Entered	1030
Vehicles Exited	1036
Hourly Exit Rate	4144
Input Volume	4121
% of Volume	101

3: Redwood Road & Commerce Drive Performance by movement Entire Run

Movement	EBL	EBT	EBR	WBL	WBT	WBR	NBL	NBT	NBR	SBL	SBT	SBR
Denied Delay (hr)	0.1	0.0	0.1	0.0	0.0	0.1	0.0	0.0	0.0	0.0	0.4	0.1
Denied Del/Veh (s)	2.7	0.6	2.7	4.0	0.4	3.9	0.0	0.0	0.1	0.2	0.7	0.5
Total Delay (hr)	2.6	0.6	0.4	0.4	0.4	0.3	0.9	7.6	0.1	2.3	10.4	1.2
Total Del/Veh (s)	56.6	45.5	17.0	50.1	43.0	13.5	40.1	22.9	7.7	60.0	19.1	11.9
Vehicles Entered	163	43	91	26	35	78	81	1184	27	139	1956	372
Vehicles Exited	162	42	91	26	35	78	80	1178	27	137	1954	371
Hourly Exit Rate	162	42	91	26	35	78	80	1178	27	137	1954	371
Input Volume	162	42	90	22	34	78	83	1166	24	129	1992	372
% of Volume	100	101	101	117	104	100	96	101	111	106	98	100

3: Redwood Road & Commerce Drive Performance by movement Entire Run

Movement	All
Denied Delay (hr)	0.7
Denied Del/Veh (s)	0.6
Total Delay (hr)	27.3
Total Del/Veh (s)	23.3
Vehicles Entered	4195
Vehicles Exited	4181
Hourly Exit Rate	4181
Input Volume	4194
% of Volume	100

11: Redwood Road & Aspen Hills Blvd Performance by movement Interval #1 5:00

Movement	EBL	EBR	NBL	NBT	SBT	SBR	All
Denied Delay (hr)	0.0	0.0	0.0	0.0	0.0	0.0	0.0
Denied Del/Veh (s)	0.2	0.1	0.1	0.0	0.0	0.0	0.0
Total Delay (hr)	0.1	0.2	0.1	0.1	0.6	0.0	1.1
Total Del/Veh (s)	106.5	75.4	70.7	1.1	3.8	1.8	4.1
Vehicles Entered	3	7	5	314	582	12	923
Vehicles Exited	2	6	5	318	583	12	926
Hourly Exit Rate	8	24	20	1272	2332	48	3704
Input Volume	9	24	23	1317	2341	49	3763
% of Volume	89	100	87	97	100	98	98

11: Redwood Road & Aspen Hills Blvd Performance by movement Interval #2 5:15

Movement	EBL	EBR	NBL	NBT	SBT	SBR	All
Denied Delay (hr)	0.0	0.0	0.0	0.0	0.0	0.0	0.0
Denied Del/Veh (s)	0.1	0.1	0.0	0.0	0.0	0.0	0.0
Total Delay (hr)	0.3	0.4	0.1	0.1	0.7	0.0	1.5
Total Del/Veh (s)	228.6	188.1	57.6	1.3	4.0	1.6	5.5
Vehicles Entered	3	6	6	354	591	12	972
Vehicles Exited	3	4	6	353	591	13	970
Hourly Exit Rate	12	16	24	1412	2364	52	3880
Input Volume	9	24	24	1410	2508	53	4028
% of Volume	133	67	100	100	94	98	96

11: Redwood Road & Aspen Hills Blvd Performance by movement Interval #3 5:30

Movement	EBL	EBR	NBL	NBT	SBT	SBR	All
Denied Delay (hr)	0.0	0.0	0.0	0.0	0.0	0.0	0.0
Denied Del/Veh (s)	0.1	0.2	0.0	0.0	0.0	0.0	0.0
Total Delay (hr)	0.2	0.6	0.1	0.1	0.7	0.0	1.8
Total Del/Veh (s)	288.0	251.5	77.2	1.3	4.1	1.6	6.6
Vehicles Entered	2	6	6	354	588	12	968
Vehicles Exited	2	7	6	351	592	12	970
Hourly Exit Rate	8	28	24	1404	2368	48	3880
Input Volume	9	24	23	1317	2341	49	3763
% of Volume	89	117	104	107	101	98	103

11: Redwood Road & Aspen Hills Blvd Performance by movement Interval #4 5:45

Movement	EBL	EBR	NBL	NBT	SBT	SBR	All
Denied Delay (hr)	0.0	0.0	0.0	0.0	0.0	0.0	0.0
Denied Del/Veh (s)	0.1	0.1	0.0	0.0	0.0	0.0	0.0
Total Delay (hr)	0.1	0.3	0.1	0.1	0.7	0.0	1.4
Total Del/Veh (s)	250.9	149.4	82.4	1.2	4.1	1.6	5.2
Vehicles Entered	2	7	6	329	593	14	951
Vehicles Exited	2	6	6	330	596	14	954
Hourly Exit Rate	8	24	24	1320	2384	56	3816
Input Volume	9	24	23	1317	2341	49	3763
% of Volume	89	100	104	100	102	114	101

11: Redwood Road & Aspen Hills Blvd Performance by movement Entire Run

Movement	EBL	EBR	NBL	NBT	SBT	SBR	All
Denied Delay (hr)	0.0	0.0	0.0	0.0	0.0	0.0	0.0
Denied Del/Veh (s)	0.1	0.1	0.0	0.0	0.0	0.0	0.0
Total Delay (hr)	0.7	1.5	0.5	0.5	2.6	0.0	5.8
Total Del/Veh (s)	288.9	206.8	75.3	1.2	4.0	1.7	5.4
Vehicles Entered	9	26	22	1352	2355	50	3814
Vehicles Exited	8	24	22	1352	2362	50	3818
Hourly Exit Rate	8	24	22	1352	2362	50	3818
Input Volume	9	24	23	1340	2383	50	3829
% of Volume	89	100	95	101	99	100	100

13: Redwood Road & Sergeant Court Drive Performance by movement Interval #1 5:00

Movement	EBL	EBR	NBL	NBT	SBT	SBR	All
Denied Delay (hr)	0.0	0.0	0.0	0.0	0.0	0.0	0.0
Denied Del/Veh (s)	4.8	0.2	0.0	0.0	0.0	0.0	0.0
Total Delay (hr)	0.0	0.3	0.1	0.3	0.4	0.0	1.1
Total Del/Veh (s)	179.8	122.5	109.4	2.8	2.3	0.4	4.1
Vehicles Entered	1	8	4	324	583	5	925
Vehicles Exited	1	7	3	325	580	4	920
Hourly Exit Rate	4	28	12	1300	2320	16	3680
Input Volume	5	26	15	1378	2348	17	3789
% of Volume	80	108	80	94	99	94	97

13: Redwood Road & Sergeant Court Drive Performance by movement Interval #2 5:15

Movement	EBL	EBR	NBL	NBT	SBT	SBR	All
Denied Delay (hr)	0.0	0.0	0.0	0.0	0.0	0.0	0.0
Denied Del/Veh (s)	4.2	0.1	0.3	0.0	0.0	0.0	0.0
Total Delay (hr)	0.1	0.4	0.1	0.3	0.6	0.0	1.7
Total Del/Veh (s)	492.3	152.8	103.1	3.4	3.7	0.6	6.0
Vehicles Entered	1	8	5	367	593	5	979
Vehicles Exited	1	8	5	371	596	5	986
Hourly Exit Rate	4	32	20	1484	2384	20	3944
Input Volume	5	27	16	1476	2516	18	4058
% of Volume	80	119	125	101	95	111	97

13: Redwood Road & Sergeant Court Drive Performance by movement Interval #3 5:30

Movement	EBL	EBR	NBL	NBT	SBT	SBR	All
Denied Delay (hr)	0.0	0.0	0.0	0.0	0.0	0.0	0.0
Denied Del/Veh (s)	4.6	0.2	0.2	0.0	0.0	0.0	0.0
Total Delay (hr)	0.2	0.5	0.2	0.4	0.9	0.0	2.2
Total Del/Veh (s)	414.9	186.3	144.5	3.6	5.5	0.8	7.9
Vehicles Entered	1	6	4	373	599	4	987
Vehicles Exited	1	6	4	372	600	4	987
Hourly Exit Rate	4	24	16	1488	2400	16	3948
Input Volume	5	26	15	1378	2348	17	3789
% of Volume	80	92	107	108	102	94	104

13: Redwood Road & Sergeant Court Drive Performance by movement Interval #4 5:45

Movement	EBL	EBR	NBL	NBT	SBT	SBR	All
Denied Delay (hr)	0.0	0.0	0.0	0.0	0.0	0.0	0.0
Denied Del/Veh (s)	3.8	0.1	0.1	0.0	0.0	0.0	0.0
Total Delay (hr)	0.2	0.5	0.2	0.3	0.5	0.0	1.6
Total Del/Veh (s)	274.0	184.2	153.5	3.3	2.8	0.4	5.9
Vehicles Entered	1	6	3	346	591	4	951
Vehicles Exited	1	6	3	345	589	4	948
Hourly Exit Rate	4	24	12	1380	2356	16	3792
Input Volume	5	26	15	1378	2348	17	3789
% of Volume	80	92	80	100	100	94	100

13: Redwood Road & Sergeant Court Drive Performance by movement Entire Run

Movement	EBL	EBR	NBL	NBT	SBT	SBR	All
Denied Delay (hr)	0.0	0.0	0.0	0.0	0.0	0.0	0.0
Denied Del/Veh (s)	3.5	0.1	0.2	0.0	0.0	0.0	0.0
Total Delay (hr)	0.6	1.6	0.6	1.3	2.4	0.0	6.5
Total Del/Veh (s)	409.9	194.7	143.1	3.3	3.6	0.6	6.1
Vehicles Entered	5	29	16	1411	2367	18	3846
Vehicles Exited	4	27	15	1413	2366	18	3843
Hourly Exit Rate	4	27	15	1413	2366	18	3843
Input Volume	5	26	15	1402	2390	17	3856
% of Volume	80	103	98	101	99	104	100

19: 3600 West & 2100 North WB Performance by movement Interval #1 5:00

Movement	WBL	WBT	WBR	NBL	NBT	SBT	SBR	All
Denied Delay (hr)	0.0	0.0	0.0	0.0	0.0	0.0	0.0	0.0
Denied Del/Veh (s)	0.0	0.0	0.0	0.0		0.1		0.0
Total Delay (hr)	0.0	0.0	0.0	0.0	0.0	0.1	0.0	0.1
Total Del/Veh (s)	0.1	0.2	0.0	17.2		36.6		0.6
Vehicles Entered	16	415	1	1	0	5	0	438
Vehicles Exited	16	416	1	1	0	5	0	439
Hourly Exit Rate	64	1664	4	4	0	20	0	1756
Input Volume	65	1720	4	7	1	21	1	1819
% of Volume	98	97	100	57	0	95	0	97

19: 3600 West & 2100 North WB Performance by movement Interval #2 5:15

Movement	WBL	WBT	WBR	NBL	NBT	SBT	SBR	All
Denied Delay (hr)	0.0	0.0	0.0	0.0	0.0	0.0	0.0	0.0
Denied Del/Veh (s)	0.0	0.0	0.0	0.0		0.1		0.0
Total Delay (hr)	0.0	0.0	0.0	0.0	0.0	0.0	0.0	0.1
Total Del/Veh (s)	0.1	0.2	0.0	18.4		28.7		0.6
Vehicles Entered	17	472	1	2	0	5	0	497
Vehicles Exited	17	471	1	2	0	4	0	495
Hourly Exit Rate	68	1884	4	8	0	16	0	1980
Input Volume	69	1843	4	7	1	22	1	1947
% of Volume	99	102	100	114	0	73	0	102

19: 3600 West & 2100 North WB Performance by movement Interval #3 5:30

Movement	WBL	WBT	WBR	NBL	NBT	SBT	SBR	All
Denied Delay (hr)	0.0	0.0	0.0	0.0	0.0	0.0	0.0	0.0
Denied Del/Veh (s)	0.0	0.0	0.0	0.0		0.1		0.0
Total Delay (hr)	0.0	0.0	0.0	0.0	0.0	0.0	0.0	0.1
Total Del/Veh (s)	0.0	0.2	0.0	17.9		21.2		0.6
Vehicles Entered	18	424	1	2	0	7	0	452
Vehicles Exited	18	424	1	2	0	7	0	452
Hourly Exit Rate	72	1696	4	8	0	28	0	1808
Input Volume	65	1720	4	7	1	21	1	1819
% of Volume	111	99	100	114	0	133	0	99

19: 3600 West & 2100 North WB Performance by movement Interval #4 5:45

Movement	WBL	WBT	WBR	NBL	NBT	SBT	SBR	All
Denied Delay (hr)	0.0	0.0	0.0	0.0	0.0	0.0	0.0	0.0
Denied Del/Veh (s)	0.0	0.0	0.0	0.0		0.1		0.0
Total Delay (hr)	0.0	0.0	0.0	0.0	0.0	0.0	0.0	0.1
Total Del/Veh (s)	0.1	0.2	0.0	13.8		24.7		0.6
Vehicles Entered	17	439	1	1	0	6	0	464
Vehicles Exited	17	440	1	1	0	6	0	465
Hourly Exit Rate	68	1760	4	4	0	24	0	1860
Input Volume	65	1720	4	7	1	21	1	1819
% of Volume	105	102	100	57	0	114	0	102

19: 3600 West & 2100 North WB Performance by movement Entire Run

Movement	WBL	WBT	WBR	NBL	NBT	SBT	SBR	All
Denied Delay (hr)	0.0	0.0	0.0	0.0	0.0	0.0	0.0	0.0
Denied Del/Veh (s)	0.0	0.0	0.0	0.0	0.0	0.1	0.1	0.0
Total Delay (hr)	0.0	0.1	0.0	0.0	0.0	0.2	0.0	0.3
Total Del/Veh (s)	0.1	0.2	0.0	19.6	27.7	27.1	8.6	0.6
Vehicles Entered	68	1749	4	6	1	22	1	1851
Vehicles Exited	68	1750	4	6	1	23	1	1853
Hourly Exit Rate	68	1750	4	6	1	23	1	1853
Input Volume	66	1751	4	7	1	21	1	1851
% of Volume	103	100	100	86	100	108	100	100

20: 3600 West & 2100 North EB Performance by movement Interval #1 5:00

Movement	EBL	EBT	EBR	NBT	NBR	SBL	SBT	All
Denied Delay (hr)	0.0	0.0	0.0	0.0	0.0	0.0	0.0	0.0
Denied Del/Veh (s)		0.0	0.0	0.1	0.9	0.0	0.0	0.0
Total Delay (hr)	0.0	0.0	0.0	0.0	0.0	0.0	0.1	0.1
Total Del/Veh (s)		0.2	0.0	10.2	4.4	14.1	12.1	1.4
Vehicles Entered	0	232	3	1	14	3	19	272
Vehicles Exited	0	232	3	1	15	3	18	272
Hourly Exit Rate	0	928	12	4	60	12	72	1088
Input Volume	1	937	10	7	56	13	73	1097
% of Volume	0	99	120	57	107	92	99	99

20: 3600 West & 2100 North EB Performance by movement Interval #2 5:15

Movement	EBL	EBT	EBR	NBT	NBR	SBL	SBT	All
Denied Delay (hr)	0.0	0.0	0.0	0.0	0.0	0.0	0.0	0.0
Denied Del/Veh (s)		0.0	0.0	0.1	1.1	0.0	0.0	0.1
Total Delay (hr)	0.0	0.0	0.0	0.0	0.0	0.0	0.1	0.1
Total Del/Veh (s)		0.2	0.0	9.1	5.6	11.2	13.5	1.5
Vehicles Entered	0	245	3	2	16	3	19	288
Vehicles Exited	0	246	3	2	15	3	19	288
Hourly Exit Rate	0	984	12	8	60	12	76	1152
Input Volume	1	1004	11	7	60	14	78	1175
% of Volume	0	98	109	114	100	86	97	98

20: 3600 West & 2100 North EB Performance by movement Interval #3 5:30

Movement	EBL	EBT	EBR	NBT	NBR	SBL	SBT	All
Denied Delay (hr)	0.0	0.0	0.0	0.0	0.0	0.0	0.0	0.0
Denied Del/Veh (s)		0.0	0.0	0.2	1.1	0.0	0.0	0.1
Total Delay (hr)	0.0	0.0	0.0	0.0	0.0	0.0	0.1	0.1
Total Del/Veh (s)		0.2	0.1	11.4	5.4	9.1	12.9	1.6
Vehicles Entered	0	242	2	2	14	4	21	285
Vehicles Exited	0	241	2	2	15	4	21	285
Hourly Exit Rate	0	964	8	8	60	16	84	1140
Input Volume	1	937	10	7	56	13	73	1097
% of Volume	0	103	80	114	107	123	115	104

20: 3600 West & 2100 North EB Performance by movement Interval #4 5:45

Movement	EBT	EBR	NBT	NBR	SBL	SBT	All
Denied Delay (hr)	0.0	0.0	0.0	0.0	0.0	0.0	0.0
Denied Del/Veh (s)	0.0	0.0	0.1	0.8	0.0	0.0	0.0
Total Delay (hr)	0.0	0.0	0.0	0.0	0.0	0.1	0.1
Total Del/Veh (s)	0.2	0.0	7.2	4.6	10.0	11.8	1.4
Vehicles Entered	237	3	1	12	3	20	276
Vehicles Exited	237	3	2	12	3	20	277
Hourly Exit Rate	948	12	8	48	12	80	1108
Input Volume	937	10	7	56	13	73	1097
% of Volume	101	120	114	86	92	110	101

20: 3600 West & 2100 North EB Performance by movement Entire Run

Movement	EBL	EBT	EBR	NBT	NBR	SBL	SBT	All
Denied Delay (hr)	0.0	0.0	0.0	0.0	0.0	0.0	0.0	0.0
Denied Del/Veh (s)	0.0	0.0	0.0	0.1	1.0	0.0	0.0	0.1
Total Delay (hr)	0.0	0.1	0.0	0.0	0.1	0.0	0.3	0.5
Total Del/Veh (s)	0.0	0.2	0.0	11.0	5.2	10.9	12.7	1.5
Vehicles Entered	1	956	11	6	56	12	78	1120
Vehicles Exited	1	956	11	6	57	12	78	1121
Hourly Exit Rate	1	956	11	6	57	12	78	1121
Input Volume	1	954	10	7	57	13	74	1116
% of Volume	100	100	107	86	100	91	105	100

22: 2100 North WB Performance by movement Interval #1 5:00

Movement	WBL	WBT	All
Denied Delay (hr)	0.0	0.0	0.1
Denied Del/Veh (s)	1.3	0.4	0.4
Total Delay (hr)	0.0	0.2	0.2
Total Del/Veh (s)	1.9	1.9	1.9
Vehicles Entered	1	434	435
Vehicles Exited	1	433	434
Hourly Exit Rate	4	1732	1736
Input Volume	6	1788	1794
% of Volume	67	97	97

22: 2100 North WB Performance by movement Interval #2 5:15

Movement	WBL	WBT	All
Denied Delay (hr)	0.0	0.1	0.1
Denied Del/Veh (s)	0.7	0.5	0.5
Total Delay (hr)	0.0	0.3	0.3
Total Del/Veh (s)	1.1	2.3	2.3
Vehicles Entered	1	487	488
Vehicles Exited	1	489	490
Hourly Exit Rate	4	1956	1960
Input Volume	6	1916	1922
% of Volume	67	102	102

22: 2100 North WB Performance by movement Interval #3 5:30

Movement	WBL	WBT	All
Denied Delay (hr)	0.0	0.1	0.1
Denied Del/Veh (s)	2.0	0.4	0.4
Total Delay (hr)	0.0	0.2	0.2
Total Del/Veh (s)	0.6	1.9	1.9
Vehicles Entered	1	444	445
Vehicles Exited	1	442	443
Hourly Exit Rate	4	1768	1772
Input Volume	6	1788	1794
% of Volume	67	99	99

22: 2100 North WB Performance by movement Interval #4 5:45

Movement	WBL	WBT	All
Denied Delay (hr)	0.0	0.1	0.1
Denied Del/Veh (s)	1.5	0.4	0.4
Total Delay (hr)	0.0	0.2	0.3
Total Del/Veh (s)	1.3	1.9	1.9
Vehicles Entered	2	456	458
Vehicles Exited	2	456	458
Hourly Exit Rate	8	1824	1832
Input Volume	6	1788	1794
% of Volume	133	102	102

22: 2100 North WB Performance by movement Entire Run

Movement	WBL	WBT	All
Denied Delay (hr)	0.0	0.2	0.2
Denied Del/Veh (s)	1.4	0.4	0.4
Total Delay (hr)	0.0	1.1	1.1
Total Del/Veh (s)	1.2	2.1	2.1
Vehicles Entered	5	1822	1827
Vehicles Exited	5	1820	1825
Hourly Exit Rate	5	1820	1825
Input Volume	6	1820	1826
% of Volume	83	100	100

23: 2100 North EB Performance by movement Interval #1 5:00

Movement	EBT	SEL	All
Denied Delay (hr)	0.0	0.0	0.0
Denied Del/Veh (s)	0.0	0.0	0.0
Total Delay (hr)	0.0	0.0	0.0
Total Del/Veh (s)	0.2	6.5	0.2
Vehicles Entered	250	1	251
Vehicles Exited	250	1	251
Hourly Exit Rate	1000	4	1004
Input Volume	1006	6	1012
% of Volume	99	67	99

23: 2100 North EB Performance by movement Interval #2 5:15

Movement	EBT	SEL	All
Denied Delay (hr)	0.0	0.0	0.0
Denied Del/Veh (s)	0.0	0.0	0.0
Total Delay (hr)	0.0	0.0	0.0
Total Del/Veh (s)	0.2	6.8	0.2
Vehicles Entered	264	1	265
Vehicles Exited	264	1	265
Hourly Exit Rate	1056	4	1060
Input Volume	1079	6	1085
% of Volume	98	67	98

23: 2100 North EB Performance by movement Interval #3 5:30

Movement	EBT	SEL	All
Denied Delay (hr)	0.0	0.0	0.0
Denied Del/Veh (s)	0.0	0.0	0.0
Total Delay (hr)	0.0	0.0	0.0
Total Del/Veh (s)	0.2	5.4	0.2
Vehicles Entered	260	1	261
Vehicles Exited	259	1	260
Hourly Exit Rate	1036	4	1040
Input Volume	1006	6	1012
% of Volume	103	67	103

23: 2100 North EB Performance by movement Interval #4 5:45

Movement	EBT	SEL	All
Denied Delay (hr)	0.0	0.0	0.0
Denied Del/Veh (s)	0.0	0.0	0.0
Total Delay (hr)	0.0	0.0	0.0
Total Del/Veh (s)	0.2	7.1	0.2
Vehicles Entered	252	2	254
Vehicles Exited	252	2	254
Hourly Exit Rate	1008	8	1016
Input Volume	1006	6	1012
% of Volume	100	133	100

23: 2100 North EB Performance by movement Entire Run

Movement	EBT	SEL	All
Denied Delay (hr)	0.0	0.0	0.0
Denied Del/Veh (s)	0.0	0.0	0.0
Total Delay (hr)	0.0	0.0	0.1
Total Del/Veh (s)	0.2	6.6	0.2
Vehicles Entered	1026	5	1031
Vehicles Exited	1026	5	1031
Hourly Exit Rate	1026	5	1031
Input Volume	1024	6	1030
% of Volume	100	83	100

24: 2100 North EB Performance by movement Interval #1 5:00

Movement	EBL	EBT	All
Denied Delay (hr)	0.0	0.0	0.0
Denied Del/Veh (s)		0.2	0.2
Total Delay (hr)	0.0	0.1	0.1
Total Del/Veh (s)		1.1	1.1
Vehicles Entered	0	235	235
Vehicles Exited	0	236	236
Hourly Exit Rate	0	944	944
Input Volume	1	948	949
% of Volume	0	100	99

24: 2100 North EB Performance by movement Interval #2 5:15

Movement	EBL	EBT	All
Denied Delay (hr)	0.0	0.0	0.0
Denied Del/Veh (s)		0.2	0.2
Total Delay (hr)	0.0	0.1	0.1
Total Del/Veh (s)		1.2	1.2
Vehicles Entered	0	249	249
Vehicles Exited	0	248	248
Hourly Exit Rate	0	992	992
Input Volume	1	1016	1017
% of Volume	0	98	98

24: 2100 North EB Performance by movement Interval #3 5:30

Movement	EBT	All
Denied Delay (hr)	0.0	0.0
Denied Del/Veh (s)	0.2	0.2
Total Delay (hr)	0.1	0.1
Total Del/Veh (s)	1.1	1.1
Vehicles Entered	244	244
Vehicles Exited	244	244
Hourly Exit Rate	976	976
Input Volume	948	949
% of Volume	103	103

24: 2100 North EB Performance by movement Interval #4 5:45

Movement	EBL	EBT	All
Denied Delay (hr)	0.0	0.0	0.0
Denied Del/Veh (s)		0.2	0.2
Total Delay (hr)	0.0	0.1	0.1
Total Del/Veh (s)		1.1	1.1
Vehicles Entered	0	240	240
Vehicles Exited	0	240	240
Hourly Exit Rate	0	960	960
Input Volume	1	948	949
% of Volume	0	101	101

24: 2100 North EB Performance by movement Entire Run

Movement	EBL	EBT	All
Denied Delay (hr)	0.0	0.0	0.0
Denied Del/Veh (s)		0.2	0.2
Total Delay (hr)	0.0	0.3	0.3
Total Del/Veh (s)		1.2	1.2
Vehicles Entered	0	968	968
Vehicles Exited	0	968	968
Hourly Exit Rate	0	968	968
Input Volume	1	965	966
% of Volume	0	100	100

25: 2100 North WB Performance by movement Interval #1 5:00

Movement	WBT	NWL	All
Denied Delay (hr)	0.0	0.0	0.0
Denied Del/Veh (s)	0.0		0.0
Total Delay (hr)	0.0	0.0	0.0
Total Del/Veh (s)	0.2		0.2
Vehicles Entered	417	0	417
Vehicles Exited	418	0	418
Hourly Exit Rate	1672	0	1672
Input Volume	1728	1	1729
% of Volume	97	0	97

25: 2100 North WB Performance by movement Interval #2 5:15

Movement	WBT	NWL	All
Denied Delay (hr)	0.0	0.0	0.0
Denied Del/Veh (s)	0.0		0.0
Total Delay (hr)	0.0	0.0	0.0
Total Del/Veh (s)	0.2		0.2
Vehicles Entered	473	0	473
Vehicles Exited	472	0	472
Hourly Exit Rate	1888	0	1888
Input Volume	1851	1	1852
% of Volume	102	0	102

25: 2100 North WB Performance by movement Interval #3 5:30

Movement	WBT	NWL	All
Denied Delay (hr)	0.0	0.0	0.0
Denied Del/Veh (s)	0.0		0.0
Total Delay (hr)	0.0	0.0	0.0
Total Del/Veh (s)	0.2		0.2
Vehicles Entered	426	0	426
Vehicles Exited	427	0	427
Hourly Exit Rate	1708	0	1708
Input Volume	1728	1	1729
% of Volume	99	0	99

25: 2100 North WB Performance by movement Interval #4 5:45

Movement	WBT	NWL	All
Denied Delay (hr)	0.0	0.0	0.0
Denied Del/Veh (s)	0.0		0.0
Total Delay (hr)	0.0	0.0	0.0
Total Del/Veh (s)	0.2		0.2
Vehicles Entered	441	0	441
Vehicles Exited	440	0	440
Hourly Exit Rate	1760	0	1760
Input Volume	1728	1	1729
% of Volume	102	0	102

25: 2100 North WB Performance by movement Entire Run

Movement	WBT	NWL	All
Denied Delay (hr)	0.0	0.0	0.0
Denied Del/Veh (s)	0.0		0.0
Total Delay (hr)	0.1	0.0	0.1
Total Del/Veh (s)	0.2		0.2
Vehicles Entered	1757	0	1757
Vehicles Exited	1757	0	1757
Hourly Exit Rate	1757	0	1757
Input Volume	1759	1	1760
% of Volume	100	0	100

31: 400 East & Crossroads Blvd Performance by movement Interval #1 5:00

Movement	EBL	EBT	EBR	WBL	WBT	WBR	NBL	NBT	NBR	SBL	SBT	SBR
Denied Delay (hr)	0.0	0.0	0.0	0.0	0.0	0.0	0.0	0.0	0.0	0.0	0.0	0.0
Denied Del/Veh (s)	0.0	0.0	0.0	0.4	0.5	1.3	0.1	0.1	0.1	0.1	0.1	0.2
Total Delay (hr)	0.0	0.1	0.0	0.0	0.1	0.0	0.0	0.0	0.0	0.0	0.0	0.0
Total Del/Veh (s)	4.7	1.7	1.0	5.3	2.2	1.1	11.9	9.8	5.4	16.1	15.7	6.5
Vehicles Entered	4	129	3	7	154	1	2	1	4	3	3	9
Vehicles Exited	4	131	3	7	154	1	2	1	4	3	4	9
Hourly Exit Rate	16	524	12	28	616	4	8	4	16	12	16	36
Input Volume	15	524	10	30	616	2	8	3	16	14	14	40
% of Volume	107	100	120	93	100	200	100	133	100	86	114	90

31: 400 East & Crossroads Blvd Performance by movement Interval #1 5:00

Movement	All
Denied Delay (hr)	0.0
Denied Del/Veh (s)	0.3
Total Delay (hr)	0.2
Total Del/Veh (s)	2.7
Vehicles Entered	320
Vehicles Exited	323
Hourly Exit Rate	1292
Input Volume	1292
% of Volume	100

31: 400 East & Crossroads Blvd Performance by movement Interval #2 5:15

Movement	EBL	EBT	EBR	WBL	WBT	WBR	NBL	NBT	NBR	SBL	SBT	SBR
Denied Delay (hr)	0.0	0.0	0.0	0.0	0.0	0.0	0.0	0.0	0.0	0.0	0.0	0.0
Denied Del/Veh (s)	0.0	0.0	0.0	0.4	0.5		0.1	0.1	0.1	0.1	0.1	0.1
Total Delay (hr)	0.0	0.1	0.0	0.0	0.1	0.0	0.0	0.0	0.0	0.0	0.0	0.0
Total Del/Veh (s)	5.9	1.9	0.4	4.9	2.5		10.1	14.5	5.1	21.8	15.7	9.1
Vehicles Entered	5	124	3	8	168	0	2	1	4	3	4	11
Vehicles Exited	5	124	3	7	167	0	2	1	4	3	4	11
Hourly Exit Rate	20	496	12	28	668	0	8	4	16	12	16	44
Input Volume	16	561	11	33	660	2	8	3	17	15	15	43
% of Volume	125	88	109	85	101	0	100	133	94	80	107	102

31: 400 East & Crossroads Blvd Performance by movement Interval #2 5:15

Movement	All
Denied Delay (hr)	0.0
Denied Del/Veh (s)	0.3
Total Delay (hr)	0.3
Total Del/Veh (s)	3.1
Vehicles Entered	333
Vehicles Exited	331
Hourly Exit Rate	1324
Input Volume	1384
% of Volume	96

31: 400 East & Crossroads Blvd Performance by movement Interval #3 5:30

Movement	EBL	EBT	EBR	WBL	WBT	WBR	NBL	NBT	NBR	SBL	SBT	SBR
Denied Delay (hr)	0.0	0.0	0.0	0.0	0.0	0.0	0.0	0.0	0.0	0.0	0.0	0.0
Denied Del/Veh (s)	0.0	0.0	0.0	0.4	0.5	0.7	0.1		0.1	0.1	0.2	0.2
Total Delay (hr)	0.0	0.1	0.0	0.0	0.1	0.0	0.0	0.0	0.0	0.0	0.0	0.0
Total Del/Veh (s)	4.6	1.7	1.3	5.5	2.4	0.8	15.4		8.2	17.6	23.5	9.3
Vehicles Entered	3	135	2	7	158	1	2	0	5	4	2	12
Vehicles Exited	3	132	2	8	159	1	2	0	5	4	2	12
Hourly Exit Rate	12	528	8	32	636	4	8	0	20	16	8	48
Input Volume	15	524	10	30	616	2	8	3	16	14	14	40
% of Volume	80	101	80	107	103	200	100	0	125	114	57	120

31: 400 East & Crossroads Blvd Performance by movement Interval #3 5:30

Movement	All
Denied Delay (hr)	0.0
Denied Del/Veh (s)	0.3
Total Delay (hr)	0.3
Total Del/Veh (s)	3.0
Vehicles Entered	331
Vehicles Exited	330
Hourly Exit Rate	1320
Input Volume	1292
% of Volume	102

31: 400 East & Crossroads Blvd Performance by movement Interval #4 5:45

Movement	EBL	EBT	EBR	WBL	WBT	WBR	NBL	NBT	NBR	SBL	SBT	SBR
Denied Delay (hr)	0.0	0.0	0.0	0.0	0.0	0.0	0.0	0.0	0.0	0.0	0.0	0.0
Denied Del/Veh (s)	0.0	0.0	0.0	0.5	0.6		0.2	0.1	0.1	0.1	0.1	0.1
Total Delay (hr)	0.0	0.1	0.0	0.0	0.1	0.0	0.0	0.0	0.0	0.0	0.0	0.0
Total Del/Veh (s)	6.9	1.6	0.7	6.6	2.6		19.2	8.0	4.9	18.2	19.1	6.7
Vehicles Entered	3	131	3	7	158	0	2	1	5	3	4	11
Vehicles Exited	3	132	3	7	156	0	3	1	6	3	4	11
Hourly Exit Rate	12	528	12	28	624	0	12	4	24	12	16	44
Input Volume	15	524	10	30	616	2	8	3	16	14	14	40
% of Volume	80	101	120	93	101	0	150	133	150	86	114	110

31: 400 East & Crossroads Blvd Performance by movement Interval #4 5:45

Movement	All
Denied Delay (hr)	0.0
Denied Del/Veh (s)	0.3
Total Delay (hr)	0.3
Total Del/Veh (s)	3.0
Vehicles Entered	328
Vehicles Exited	329
Hourly Exit Rate	1316
Input Volume	1292
% of Volume	102

31: 400 East & Crossroads Blvd Performance by movement Entire Run

Movement	EBL	EBT	EBR	WBL	WBT	WBR	NBL	NBT	NBR	SBL	SBT	SBR
Denied Delay (hr)	0.0	0.0	0.0	0.0	0.1	0.0	0.0	0.0	0.0	0.0	0.0	0.0
Denied Del/Veh (s)	0.0	0.0	0.0	0.4	0.5	1.5	0.1	0.1	0.1	0.1	0.1	0.1
Total Delay (hr)	0.0	0.3	0.0	0.0	0.4	0.0	0.0	0.0	0.0	0.1	0.1	0.1
Total Del/Veh (s)	5.5	1.8	0.8	5.9	2.5	1.3	16.5	13.0	5.9	20.0	17.8	8.1
Vehicles Entered	15	520	11	29	637	2	8	3	19	13	14	43
Vehicles Exited	15	519	10	29	636	2	8	3	19	13	14	43
Hourly Exit Rate	15	519	10	29	636	2	8	3	19	13	14	43
Input Volume	15	533	10	31	627	2	8	3	16	14	14	41
% of Volume	98	97	98	94	101	100	100	100	117	91	98	106

31: 400 East & Crossroads Blvd Performance by movement Entire Run

Movement	All
Denied Delay (hr)	0.1
Denied Del/Veh (s)	0.3
Total Delay (hr)	1.1
Total Del/Veh (s)	3.0
Vehicles Entered	1314
Vehicles Exited	1311
Hourly Exit Rate	1311
Input Volume	1315
% of Volume	100

34: Crossroads Blvd Performance by movement Interval #1 5:00

Movement	EBT	EBR	WBT	NBR	All
Denied Delay (hr)	0.0	0.0	0.0	0.0	0.0
Denied Del/Veh (s)	0.0	0.0	0.0		0.0
Total Delay (hr)	0.2	0.0	0.0	0.0	0.2
Total Del/Veh (s)	4.5	1.2	0.3		2.2
Vehicles Entered	130	7	164	0	301
Vehicles Exited	132	6	164	0	302
Hourly Exit Rate	528	24	656	0	1208
Input Volume	546	20	664	1	1231
% of Volume	97	120	99	0	98

34: Crossroads Blvd Performance by movement Interval #2 5:15

Movement	EBT	EBR	WBT	NBR	All
Denied Delay (hr)	0.0	0.0	0.0	0.0	0.0
Denied Del/Veh (s)	0.0	0.0	0.0		0.0
Total Delay (hr)	0.1	0.0	0.0	0.0	0.2
Total Del/Veh (s)	4.1	1.0	0.3		1.9
Vehicles Entered	126	6	179	0	311
Vehicles Exited	130	7	180	0	317
Hourly Exit Rate	520	28	720	0	1268
Input Volume	585	21	712	1	1319
% of Volume	89	133	101	0	96

34: Crossroads Blvd Performance by movement Interval #3 5:30

Movement	EBT	EBR	WBT	NBR	All
Denied Delay (hr)	0.0	0.0	0.0	0.0	0.0
Denied Del/Veh (s)	0.0	0.0	0.0		0.0
Total Delay (hr)	0.2	0.0	0.0	0.0	0.2
Total Del/Veh (s)	4.7	0.9	0.3		2.3
Vehicles Entered	141	7	172	0	320
Vehicles Exited	141	6	171	0	318
Hourly Exit Rate	564	24	684	0	1272
Input Volume	546	20	664	1	1231
% of Volume	103	120	103	0	103

34: Crossroads Blvd Performance by movement Interval #4 5:45

Movement	EBT	EBR	WBT	NBR	All
Denied Delay (hr)	0.0	0.0	0.0	0.0	0.0
Denied Del/Veh (s)	0.0	0.0	0.0		0.0
Total Delay (hr)	0.2	0.0	0.0	0.0	0.2
Total Del/Veh (s)	4.2	1.6	0.3		2.0
Vehicles Entered	138	6	170	0	314
Vehicles Exited	138	6	170	0	314
Hourly Exit Rate	552	24	680	0	1256
Input Volume	546	20	664	1	1231
% of Volume	101	120	102	0	102

34: Crossroads Blvd Performance by movement Entire Run

Movement	EBT	EBR	WBT	NBR	All
Denied Delay (hr)	0.0	0.0	0.0	0.0	0.0
Denied Del/Veh (s)	0.0	0.0	0.0	0.1	0.0
Total Delay (hr)	0.7	0.0	0.1	0.0	0.7
Total Del/Veh (s)	4.5	1.2	0.3	2.0	2.1
Vehicles Entered	535	25	685	1	1246
Vehicles Exited	541	26	685	1	1253
Hourly Exit Rate	541	26	685	1	1253
Input Volume	556	20	676	1	1253
% of Volume	97	128	101	100	100

38: Performance by movement Interval #1 5:00

Movement	EBL	EBR	NBL	NBT	SBT	SBR	All
Denied Delay (hr)	0.0	0.0	0.0	0.0	0.1	0.0	0.1
Denied Del/Veh (s)	0.1	0.1	0.0	0.0	0.8	1.3	0.5
Total Delay (hr)	0.3	0.3	0.3	0.3	4.5	0.1	5.8
Total Del/Veh (s)	59.0	39.0	46.3	3.2	25.8	15.8	20.2
Vehicles Entered	18	25	23	298	569	25	958
Vehicles Exited	16	23	23	300	586	25	973
Hourly Exit Rate	64	92	92	1200	2344	100	3892
Input Volume	74	98	98	1228	2292	98	3888
% of Volume	86	94	94	98	102	102	100

38: Performance by movement Interval #2 5:15

Movement	EBL	EBR	NBL	NBT	SBT	SBR	All
Denied Delay (hr)	0.0	0.0	0.0	0.0	0.2	0.0	0.2
Denied Del/Veh (s)	0.1	0.2	0.0	0.0	1.1	1.3	0.7
Total Delay (hr)	0.3	0.4	0.3	0.4	5.5	0.2	7.0
Total Del/Veh (s)	47.0	41.4	44.5	3.9	30.6	21.7	23.0
Vehicles Entered	20	28	23	333	602	25	1031
Vehicles Exited	20	27	22	325	576	26	996
Hourly Exit Rate	80	108	88	1300	2304	104	3984
Input Volume	79	105	105	1314	2456	105	4164
% of Volume	101	103	84	99	94	99	96

38: Performance by movement Interval #3 5:30

Movement	EBL	EBR	NBL	NBT	SBT	SBR	All
Denied Delay (hr)	0.0	0.0	0.0	0.0	0.1	0.0	0.1
Denied Del/Veh (s)	0.2	0.2	0.0	0.0	0.7	1.2	0.5
Total Delay (hr)	0.3	0.3	0.3	0.3	7.1	0.2	8.6
Total Del/Veh (s)	52.7	37.6	40.9	3.6	40.1	29.8	28.5
Vehicles Entered	17	24	26	326	570	24	987
Vehicles Exited	18	25	26	324	574	24	991
Hourly Exit Rate	72	100	104	1296	2296	96	3964
Input Volume	74	98	98	1228	2292	98	3888
% of Volume	97	102	106	106	100	98	102

38: Performance by movement Interval #4 5:45

Movement	EBL	EBR	NBL	NBT	SBT	SBR	All
Denied Delay (hr)	0.0	0.0	0.0	0.0	0.1	0.0	0.1
Denied Del/Veh (s)	0.2	0.2	0.0	0.0	0.8	1.3	0.5
Total Delay (hr)	0.3	0.3	0.3	0.3	6.2	0.2	7.6
Total Del/Veh (s)	53.3	38.4	45.7	3.5	35.1	25.2	25.9
Vehicles Entered	17	25	24	306	576	25	973
Vehicles Exited	18	26	26	307	568	25	970
Hourly Exit Rate	72	104	104	1228	2272	100	3880
Input Volume	74	98	98	1228	2292	98	3888
% of Volume	97	106	106	100	99	102	100

38: Performance by movement Entire Run

Movement	EBL	EBR	NBL	NBT	SBT	SBR	All
Denied Delay (hr)	0.0	0.0	0.0	0.0	0.6	0.0	0.6
Denied Del/Veh (s)	0.1	0.2	0.0	0.0	0.9	1.3	0.6
Total Delay (hr)	1.1	1.2	1.3	1.3	23.3	0.7	29.0
Total Del/Veh (s)	56.3	42.3	47.9	3.7	35.4	24.5	25.9
Vehicles Entered	72	102	96	1264	2317	99	3950
Vehicles Exited	72	101	96	1256	2305	99	3929
Hourly Exit Rate	72	101	96	1256	2305	99	3929
Input Volume	75	100	100	1250	2333	100	3957
% of Volume	96	101	96	101	99	99	99

Total Network Performance By Interval

Interval Start	5:00	5:15	5:30	5:45	All
Denied Delay (hr)	0.5	0.7	0.6	0.6	2.4
Denied Del/Veh (s)	0.9	1.1	1.1	0.9	1.0
Total Delay (hr)	29.1	34.3	37.4	33.0	133.8
Total Del/Veh (s)	42.5	46.5	52.0	46.7	53.3
Vehicles Entered	2096	2273	2151	2140	8672
Vehicles Exited	2084	2214	2186	2138	8629
Hourly Exit Rate	8336	8856	8744	8552	8629
Input Volume	48995	52478	48995	48995	49866
% of Volume	17	17	18	17	17

Intersection: 2: Redwood Road & Crossroads Blvd, Interval #1

Movement	EB	EB	EB	EB	EB	EB	WB	WB	WB	WB	WB	WB
Directions Served	L	L	T	T	T	R	L	L	T	T	T	R
Maximum Queue (ft)	183	196	129	100	24	34	115	128	119	130	109	85
Average Queue (ft)	116	144	85	43	9	12	70	86	84	91	69	40
95th Queue (ft)	189	208	148	109	28	34	123	138	129	142	122	85
Link Distance (ft)			1586	1586					901	901		
Upstream Blk Time (%)												
Queuing Penalty (veh)												
Storage Bay Dist (ft)	700	700			500	500	220	220			340	340
Storage Blk Time (%)												
Queuing Penalty (veh)												

Intersection: 2: Redwood Road & Crossroads Blvd, Interval #1

Movement	NB	NB	NB	NB	NB	SB	SB	SB	SB	SB
Directions Served	L	L	T	T	R	L	L	T	T	R
Maximum Queue (ft)	143	189	258	225	36	173	155	279	291	152
Average Queue (ft)	83	132	172	147	20	117	100	168	185	81
95th Queue (ft)	162	195	268	235	40	188	168	286	300	153
Link Distance (ft)			1242	1242				1013	1013	1013
Upstream Blk Time (%)										
Queuing Penalty (veh)										
Storage Bay Dist (ft)	200	200			300	450	450			
Storage Blk Time (%)		0	5							
Queuing Penalty (veh)		1	13							

Intersection: 2: Redwood Road & Crossroads Blvd, Interval #2

Movement	EB	EB	EB	EB	EB	EB	WB	WB	WB	WB	WB	WB
Directions Served	L	L	T	T	T	R	L	L	T	T	T	R
Maximum Queue (ft)	184	216	120	76	24	30	107	132	138	140	124	73
Average Queue (ft)	135	159	79	34	6	10	66	87	101	102	82	40
95th Queue (ft)	198	228	131	86	22	29	111	134	149	155	142	80
Link Distance (ft)			1586	1586					901	901		
Upstream Blk Time (%)												
Queuing Penalty (veh)												
Storage Bay Dist (ft)	700	700			500	500	220	220			340	340
Storage Blk Time (%)												
Queuing Penalty (veh)												

Intersection: 2: Redwood Road & Crossroads Blvd, Interval #2

Movement	NB	NB	NB	NB	NB	SB	SB	SB	SB	SB
Directions Served	L	L	T	T	R	L	L	T	T	R
Maximum Queue (ft)	162	222	296	248	43	163	184	357	374	153
Average Queue (ft)	100	150	210	179	19	111	101	198	214	95
95th Queue (ft)	181	248	311	261	42	172	217	366	386	164
Link Distance (ft)			1242	1242				1013	1013	1013
Upstream Blk Time (%)										
Queuing Penalty (veh)										
Storage Bay Dist (ft)	200	200			300	450	450			
Storage Blk Time (%)	0	1	10	0				1		
Queuing Penalty (veh)	0	6	25	0				2		

Intersection: 2: Redwood Road & Crossroads Blvd, Interval #3

Movement	EB	EB	EB	EB	EB	EB	WB	WB	WB	WB	WB	WB
Directions Served	L	L	T	T	T	R	L	L	T	T	T	R
Maximum Queue (ft)	181	200	131	105	21	41	115	133	141	135	125	82
Average Queue (ft)	128	149	83	40	5	9	72	88	97	98	75	45
95th Queue (ft)	195	215	138	92	21	31	115	134	150	143	132	82
Link Distance (ft)			1586	1586					901	901		
Upstream Blk Time (%)												
Queuing Penalty (veh)												
Storage Bay Dist (ft)	700	700			500	500	220	220			340	340
Storage Blk Time (%)									0			
Queuing Penalty (veh)									0			

Intersection: 2: Redwood Road & Crossroads Blvd, Interval #3

Movement	NB	NB	NB	NB	NB	SB	SB	SB	SB	SB
Directions Served	L	L	T	T	R	L	L	T	T	R
Maximum Queue (ft)	146	184	280	246	35	154	142	317	323	194
Average Queue (ft)	90	131	206	175	19	113	93	180	193	115
95th Queue (ft)	167	195	277	253	41	164	155	341	353	207
Link Distance (ft)			1242	1242				1013	1013	1013
Upstream Blk Time (%)										
Queuing Penalty (veh)										
Storage Bay Dist (ft)	200	200			300	450	450			
Storage Blk Time (%)		0	8	0				0		
Queuing Penalty (veh)		0	20	0				1		

Intersection: 2: Redwood Road & Crossroads Blvd, Interval #4

Movement	EB	EB	EB	EB	EB	EB	WB	WB	WB	WB	WB	WB
Directions Served	L	L	T	T	T	R	L	L	T	T	T	R
Maximum Queue (ft)	167	183	127	112	20	27	108	121	126	137	123	66
Average Queue (ft)	110	135	84	43	6	8	73	88	90	96	73	37
95th Queue (ft)	181	189	135	105	21	26	122	135	131	140	131	76
Link Distance (ft)			1586	1586					901	901		
Upstream Blk Time (%)												
Queuing Penalty (veh)												
Storage Bay Dist (ft)	700	700			500	500	220	220			340	340
Storage Blk Time (%)												
Queuing Penalty (veh)												

Intersection: 2: Redwood Road & Crossroads Blvd, Interval #4

Movement	NB	NB	NB	NB	NB	SB	SB	SB	SB	SB
Directions Served	L	L	T	T	R	L	L	T	T	R
Maximum Queue (ft)	148	177	253	231	45	157	194	354	375	173
Average Queue (ft)	86	138	180	154	20	111	110	214	226	92
95th Queue (ft)	166	188	267	241	45	167	293	500	516	177
Link Distance (ft)			1242	1242				1013	1013	1013
Upstream Blk Time (%)										
Queuing Penalty (veh)										
Storage Bay Dist (ft)	200	200			300	450	450			
Storage Blk Time (%)	0	0	5	0				3		
Queuing Penalty (veh)	0	1	12	0				7		

Intersection: 2: Redwood Road & Crossroads Blvd, All Intervals

Movement	EB	EB	EB	EB	EB	EB	WB	WB	WB	WB	WB	WB
Directions Served	L	L	T	T	T	R	L	L	T	T	T	R
Maximum Queue (ft)	208	232	152	132	30	56	139	161	161	151	145	104
Average Queue (ft)	122	147	83	40	6	10	70	87	93	97	75	40
95th Queue (ft)	193	212	138	99	23	30	118	135	141	146	132	81
Link Distance (ft)			1586	1586					901	901		
Upstream Blk Time (%)												
Queuing Penalty (veh)												
Storage Bay Dist (ft)	700	700			500	500	220	220			340	340
Storage Blk Time (%)									0			
Queuing Penalty (veh)									0			

Intersection: 2: Redwood Road & Crossroads Blvd, All Intervals

Movement	NB	NB	NB	NB	NB	SB	SB	SB	SB	SB
Directions Served	L	L	T	T	R	L	L	T	T	R
Maximum Queue (ft)	175	246	320	266	56	194	256	460	471	218
Average Queue (ft)	90	138	192	164	20	113	101	190	204	96
95th Queue (ft)	170	210	286	251	42	173	219	386	402	178
Link Distance (ft)			1242	1242				1013	1013	1013
Upstream Blk Time (%)										
Queuing Penalty (veh)										
Storage Bay Dist (ft)	200	200			300	450	450			
Storage Blk Time (%)	0	0	7	0				1		
Queuing Penalty (veh)	0	2	17	0				2		

Intersection: 3: Redwood Road & Commerce Drive, Interval #1

Movement	EB	EB	EB	WB	WB	WB	NB	NB	NB	NB	SB	SB
Directions Served	L	T	R	L	T	R	L	T	T	R	L	T
Maximum Queue (ft)	164	118	95	58	70	52	91	300	287	21	247	422
Average Queue (ft)	107	42	47	22	27	28	46	183	186	6	125	235
95th Queue (ft)	176	114	90	61	72	57	94	313	311	22	252	426
Link Distance (ft)		1102			583			1013	1013			509
Upstream Blk Time (%)												1
Queuing Penalty (veh)												7
Storage Bay Dist (ft)	110		150	105		105	250			250	300	
Storage Blk Time (%)	17	0	0	0	0			3	5			5
Queuing Penalty (veh)	22	0	0	0	0			3	1			6

Intersection: 3: Redwood Road & Commerce Drive, Interval #1

Movement	SB	SB
Directions Served	T	R
Maximum Queue (ft)	422	250
Average Queue (ft)	260	104
95th Queue (ft)	451	269
Link Distance (ft)	509	
Upstream Blk Time (%)	0	
Queuing Penalty (veh)	4	
Storage Bay Dist (ft)		150
Storage Blk Time (%)	19	
Queuing Penalty (veh)	69	

Intersection: 3: Redwood Road & Commerce Drive, Interval #2

Movement	EB	EB	EB	WB	WB	WB	NB	NB	NB	NB	SB	SB
Directions Served	L	T	R	L	T	R	L	T	T	R	L	T
Maximum Queue (ft)	172	132	81	52	61	59	111	334	322	22	245	440
Average Queue (ft)	115	52	46	23	26	34	51	229	229	5	122	308
95th Queue (ft)	187	148	89	56	63	64	105	359	359	24	269	516
Link Distance (ft)		1102			583			1013	1013			509
Upstream Blk Time (%)												1
Queuing Penalty (veh)												9
Storage Bay Dist (ft)	110		150	105		105	250			250	300	
Storage Blk Time (%)	21	0	0	0		0		7	8			8
Queuing Penalty (veh)	29	0	0	0		0		6	2			11

Intersection: 3: Redwood Road & Commerce Drive, Interval #2

Movement	SB	SB
Directions Served	T	R
Maximum Queue (ft)	474	250
Average Queue (ft)	334	153
95th Queue (ft)	548	324
Link Distance (ft)	509	
Upstream Blk Time (%)	1	
Queuing Penalty (veh)	15	
Storage Bay Dist (ft)		150
Storage Blk Time (%)	21	0
Queuing Penalty (veh)	83	0

Intersection: 3: Redwood Road & Commerce Drive, Interval #3

Movement	EB	EB	EB	WB	WB	WB	NB	NB	NB	NB	SB	SB
Directions Served	L	T	R	L	T	R	L	T	T	R	L	T
Maximum Queue (ft)	185	141	82	50	62	64	122	349	342	12	342	492
Average Queue (ft)	126	45	45	24	29	31	58	227	226	3	161	368
95th Queue (ft)	182	121	85	59	69	67	138	356	350	12	372	597
Link Distance (ft)		1102			583			1013	1013			509
Upstream Blk Time (%)												1
Queuing Penalty (veh)												16
Storage Bay Dist (ft)	110		150	105		105	250			250	300	
Storage Blk Time (%)	23		0		0	0		7	8			14
Queuing Penalty (veh)	29		0		0	0		6	2			18

Intersection: 3: Redwood Road & Commerce Drive, Interval #3

Movement	SB	SB
Directions Served	T	R
Maximum Queue (ft)	500	250
Average Queue (ft)	386	187
95th Queue (ft)	603	340
Link Distance (ft)	509	
Upstream Blk Time (%)	4	
Queuing Penalty (veh)	46	
Storage Bay Dist (ft)		150
Storage Blk Time (%)	25	1
Queuing Penalty (veh)	93	5

Intersection: 3: Redwood Road & Commerce Drive, Interval #4

Movement	EB	EB	EB	WB	WB	WB	NB	NB	NB	NB	SB	SB
Directions Served	L	T	R	L	T	R	L	T	T	R	L	T
Maximum Queue (ft)	190	164	111	49	64	55	80	330	326	19	204	410
Average Queue (ft)	126	66	51	23	30	32	43	192	188	5	132	247
95th Queue (ft)	207	213	118	54	72	61	87	337	327	19	286	444
Link Distance (ft)		1102			583			1013	1013			509
Upstream Blk Time (%)												0
Queuing Penalty (veh)												5
Storage Bay Dist (ft)	110		150	105		105	250			250	300	
Storage Blk Time (%)	20	0	0		0			5	6			5
Queuing Penalty (veh)	25	0	0		0			4	1			6

Intersection: 3: Redwood Road & Commerce Drive, Interval #4

Movement	SB	SB
Directions Served	T	R
Maximum Queue (ft)	425	249
Average Queue (ft)	266	126
95th Queue (ft)	460	296
Link Distance (ft)	509	
Upstream Blk Time (%)	1	
Queuing Penalty (veh)	7	
Storage Bay Dist (ft)		150
Storage Blk Time (%)	18	0
Queuing Penalty (veh)	67	0

Intersection: 3: Redwood Road & Commerce Drive, All Intervals

Movement	EB	EB	EB	WB	WB	WB	NB	NB	NB	NB	SB	SB
Directions Served	L	T	R	L	T	R	L	T	T	R	L	T
Maximum Queue (ft)	200	209	139	71	90	77	154	395	376	34	387	512
Average Queue (ft)	118	51	47	23	28	31	50	207	207	5	135	289
95th Queue (ft)	190	155	97	57	69	63	108	346	341	20	300	514
Link Distance (ft)		1102			583			1013	1013			509
Upstream Blk Time (%)												1
Queuing Penalty (veh)												10
Storage Bay Dist (ft)	110		150	105		105	250			250	300	
Storage Blk Time (%)	20	0	0	0	0	0		6	7			8
Queuing Penalty (veh)	26	0	0	0	0	0		5	2			10

Intersection: 3: Redwood Road & Commerce Drive, All Intervals

Movement	SB	SB
Directions Served	T	R
Maximum Queue (ft)	520	250
Average Queue (ft)	312	142
95th Queue (ft)	533	315
Link Distance (ft)	509	
Upstream Blk Time (%)	2	
Queuing Penalty (veh)	18	
Storage Bay Dist (ft)		150
Storage Blk Time (%)	21	0
Queuing Penalty (veh)	78	1

Intersection: 11: Redwood Road & Aspen Hills Blvd, Interval #1

Movement	EB	NB	SB	B5
Directions Served	LR	L	R	T
Maximum Queue (ft)	81	50	2	12
Average Queue (ft)	37	21	0	2
95th Queue (ft)	89	56	4	17
Link Distance (ft)	1436			1023
Upstream Blk Time (%)				
Queuing Penalty (veh)				
Storage Bay Dist (ft)		100	200	
Storage Blk Time (%)				
Queuing Penalty (veh)				

Intersection: 11: Redwood Road & Aspen Hills Blvd, Interval #2

Movement	EB	NB	NB
Directions Served	LR	L	T
Maximum Queue (ft)	116	57	13
Average Queue (ft)	64	22	2
95th Queue (ft)	178	58	27
Link Distance (ft)	1436		760
Upstream Blk Time (%)			
Queuing Penalty (veh)			
Storage Bay Dist (ft)		100	
Storage Blk Time (%)		0	0
Queuing Penalty (veh)		0	0

Intersection: 11: Redwood Road & Aspen Hills Blvd, Interval #3

Movement	EB	NB	NB	B5	B5
Directions Served	LR	L	T	T	T
Maximum Queue (ft)	134	64	13	8	3
Average Queue (ft)	91	26	2	1	0
95th Queue (ft)	224	72	26	17	7
Link Distance (ft)	1436		760	1023	1023
Upstream Blk Time (%)					
Queuing Penalty (veh)					
Storage Bay Dist (ft)		100			
Storage Blk Time (%)		1			
Queuing Penalty (veh)		3			

Intersection: 11: Redwood Road & Aspen Hills Blvd, Interval #4

Movement	EB	NB	NB	B5
Directions Served	LR	L	T	T
Maximum Queue (ft)	101	56	31	5
Average Queue (ft)	58	26	4	1
95th Queue (ft)	137	70	39	10
Link Distance (ft)	1436		760	1023
Upstream Blk Time (%)				
Queuing Penalty (veh)				
Storage Bay Dist (ft)		100		
Storage Blk Time (%)		2	0	
Queuing Penalty (veh)		11	0	

Intersection: 11: Redwood Road & Aspen Hills Blvd, All Intervals

Movement	EB	NB	NB	SB	B5	B5
Directions Served	LR	L	T	R	T	T
Maximum Queue (ft)	166	84	48	2	8	16
Average Queue (ft)	63	24	2	0	0	1
95th Queue (ft)	167	64	27	2	8	10
Link Distance (ft)	1436		760		1023	1023
Upstream Blk Time (%)						
Queuing Penalty (veh)						
Storage Bay Dist (ft)		100		200		
Storage Blk Time (%)		1	0			
Queuing Penalty (veh)		4	0			

Intersection: 13: Redwood Road & Sergeant Court Drive, Interval #1

Movement	EB	EB	NB	NB	SB	SB	SB	B6	B6
Directions Served	L	R	L	T	T	T	R	T	T
Maximum Queue (ft)	33	85	42	8	30	30	2	2	7
Average Queue (ft)	7	41	19	1	7	8	0	0	1
95th Queue (ft)	30	116	49	17	73	83	4	4	14
Link Distance (ft)		818		509	232	232		760	760
Upstream Blk Time (%)					0	0			
Queuing Penalty (veh)					3	5			
Storage Bay Dist (ft)	25		50				100		
Storage Blk Time (%)	13	40	8			1			
Queuing Penalty (veh)	3	2	52			0			

Intersection: 13: Redwood Road & Sergeant Court Drive, Interval #2

Movement	EB	EB	NB	NB	SB	SB	B6	B6
Directions Served	L	R	L	T	T	T	T	T
Maximum Queue (ft)	27	104	50	27	88	102	8	20
Average Queue (ft)	8	57	24	4	29	39	1	4
95th Queue (ft)	31	158	57	34	151	181	17	42
Link Distance (ft)		818		509	232	232	760	760
Upstream Blk Time (%)					0	1		
Queuing Penalty (veh)					5	18		
Storage Bay Dist (ft)	25		50					
Storage Blk Time (%)	30	46	10			3		
Queuing Penalty (veh)	8	2	74			0		

Intersection: 13: Redwood Road & Sergeant Court Drive, Interval #3

Movement	EB	EB	NB	NB	SB	SB	B6	B6
Directions Served	L	R	L	T	T	T	T	T
Maximum Queue (ft)	30	106	53	27	145	181	23	41
Average Queue (ft)	11	66	27	4	46	71	6	12
95th Queue (ft)	35	231	60	33	198	243	43	83
Link Distance (ft)		818		509	232	232	760	760
Upstream Blk Time (%)					1	3		
Queuing Penalty (veh)					13	32		
Storage Bay Dist (ft)	25		50					
Storage Blk Time (%)	42	53	22			6		
Queuing Penalty (veh)	11	3	149			1		

Intersection: 13: Redwood Road & Sergeant Court Drive, Interval #4

Movement	EB	EB	NB	NB	SB	SB	B6	B6
Directions Served	L	R	L	T	T	T	T	T
Maximum Queue (ft)	26	91	53	20	49	58	14	19
Average Queue (ft)	11	59	24	1	16	18	3	3
95th Queue (ft)	37	209	60	22	115	122	32	42
Link Distance (ft)		818		509	232	232	760	760
Upstream Blk Time (%)					1	1		
Queuing Penalty (veh)					7	8		
Storage Bay Dist (ft)	25		50					
Storage Blk Time (%)	29	45	21			1		
Queuing Penalty (veh)	8	2	141			0		

Intersection: 13: Redwood Road & Sergeant Court Drive, All Intervals

Movement	EB	EB	NB	NB	SB	SB	SB	B6	B6
Directions Served	L	R	L	T	T	T	R	T	T
Maximum Queue (ft)	43	142	62	56	166	198	2	33	61
Average Queue (ft)	9	56	24	3	24	34	0	2	5
95th Queue (ft)	34	185	57	27	141	169	2	28	51
Link Distance (ft)		818		509	232	232		760	760
Upstream Blk Time (%)					1	1			
Queuing Penalty (veh)					7	16			
Storage Bay Dist (ft)	25		50				100		
Storage Blk Time (%)	28	46	15			3			
Queuing Penalty (veh)	7	2	104			0			

Intersection: 19: 3600 West & 2100 North WB, Interval #1

Movement	NB	SB
Directions Served	LT	TR
Maximum Queue (ft)	23	28
Average Queue (ft)	4	14
95th Queue (ft)	21	35
Link Distance (ft)	255	760
Upstream Blk Time (%)		
Queuing Penalty (veh)		
Storage Bay Dist (ft)		
Storage Blk Time (%)		
Queuing Penalty (veh)		

Intersection: 19: 3600 West & 2100 North WB, Interval #2

Movement	NB	SB
Directions Served	LT	TR
Maximum Queue (ft)	28	39
Average Queue (ft)	9	13
95th Queue (ft)	31	37
Link Distance (ft)	255	760
Upstream Blk Time (%)		
Queuing Penalty (veh)		
Storage Bay Dist (ft)		
Storage Blk Time (%)		
Queuing Penalty (veh)		

Intersection: 19: 3600 West & 2100 North WB, Interval #3

Movement	NB	SB
Directions Served	LT	TR
Maximum Queue (ft)	26	36
Average Queue (ft)	9	16
95th Queue (ft)	30	38
Link Distance (ft)	255	760
Upstream Blk Time (%)		
Queuing Penalty (veh)		
Storage Bay Dist (ft)		
Storage Blk Time (%)		
Queuing Penalty (veh)		

Intersection: 19: 3600 West & 2100 North WB, Interval #4

Movement	NB	SB
Directions Served	LT	TR
Maximum Queue (ft)	24	34
Average Queue (ft)	6	14
95th Queue (ft)	26	39
Link Distance (ft)	255	760
Upstream Blk Time (%)		
Queuing Penalty (veh)		
Storage Bay Dist (ft)		
Storage Blk Time (%)		
Queuing Penalty (veh)		

Intersection: 19: 3600 West & 2100 North WB, All Intervals

Movement	NB	SB
Directions Served	LT	TR
Maximum Queue (ft)	32	48
Average Queue (ft)	7	15
95th Queue (ft)	27	37
Link Distance (ft)	255	760
Upstream Blk Time (%)		
Queuing Penalty (veh)		
Storage Bay Dist (ft)		
Storage Blk Time (%)		
Queuing Penalty (veh)		

Intersection: 20: 3600 West & 2100 North EB, Interval #1

Movement	NB	NB	SB
Directions Served	T	R	LT
Maximum Queue (ft)	19	34	65
Average Queue (ft)	3	22	39
95th Queue (ft)	15	36	67
Link Distance (ft)	2312		255
Upstream Blk Time (%)			
Queuing Penalty (veh)			
Storage Bay Dist (ft)		50	
Storage Blk Time (%)		0	
Queuing Penalty (veh)		0	

Intersection: 20: 3600 West & 2100 North EB, Interval #2

Movement	EB	NB	NB	SB
Directions Served	T	T	R	LT
Maximum Queue (ft)	2	22	41	74
Average Queue (ft)	0	5	22	44
95th Queue (ft)	4	22	46	76
Link Distance (ft)	105	2312		255
Upstream Blk Time (%)				
Queuing Penalty (veh)				
Storage Bay Dist (ft)			50	
Storage Blk Time (%)			0	
Queuing Penalty (veh)			0	

Intersection: 20: 3600 West & 2100 North EB, Interval #3

Movement	EB	NB	NB	SB
Directions Served	R	T	R	LT
Maximum Queue (ft)	2	22	42	61
Average Queue (ft)	0	6	22	39
95th Queue (ft)	4	23	42	63
Link Distance (ft)	105	2312		255
Upstream Blk Time (%)				
Queuing Penalty (veh)				
Storage Bay Dist (ft)			50	
Storage Blk Time (%)			0	
Queuing Penalty (veh)			0	

Intersection: 20: 3600 West & 2100 North EB, Interval #4

Movement	NB	NB	SB
Directions Served	T	R	LT
Maximum Queue (ft)	19	43	58
Average Queue (ft)	5	19	37
95th Queue (ft)	21	41	61
Link Distance (ft)	2312		255
Upstream Blk Time (%)			
Queuing Penalty (veh)			
Storage Bay Dist (ft)		50	
Storage Blk Time (%)		0	
Queuing Penalty (veh)		0	

Intersection: 20: 3600 West & 2100 North EB, All Intervals

Movement	EB	EB	NB	NB	SB
Directions Served	T	R	T	R	LT
Maximum Queue (ft)	2	2	24	52	79
Average Queue (ft)	0	0	5	21	40
95th Queue (ft)	2	2	20	42	67
Link Distance (ft)	105	105	2312		255
Upstream Blk Time (%)					
Queuing Penalty (veh)					
Storage Bay Dist (ft)				50	
Storage Blk Time (%)				0	
Queuing Penalty (veh)				0	

Intersection: 22: 2100 North WB, Interval #1

Movement
Directions Served
Maximum Queue (ft)
Average Queue (ft)
95th Queue (ft)
Link Distance (ft)
Upstream Blk Time (%)
Queuing Penalty (veh)
Storage Bay Dist (ft)
Storage Blk Time (%)
Queuing Penalty (veh)

Intersection: 22: 2100 North WB, Interval #2

Movement
Directions Served
Maximum Queue (ft)
Average Queue (ft)
95th Queue (ft)
Link Distance (ft)
Upstream Blk Time (%)
Queuing Penalty (veh)
Storage Bay Dist (ft)
Storage Blk Time (%)
Queuing Penalty (veh)

Intersection: 22: 2100 North WB, Interval #3

Movement
Directions Served
Maximum Queue (ft)
Average Queue (ft)
95th Queue (ft)
Link Distance (ft)
Upstream Blk Time (%)
Queuing Penalty (veh)
Storage Bay Dist (ft)
Storage Blk Time (%)
Queuing Penalty (veh)

Intersection: 22: 2100 North WB, Interval #4

Movement
Directions Served
Maximum Queue (ft)
Average Queue (ft)
95th Queue (ft)
Link Distance (ft)
Upstream Blk Time (%)
Queuing Penalty (veh)
Storage Bay Dist (ft)
Storage Blk Time (%)
Queuing Penalty (veh)

Intersection: 22: 2100 North WB, All Intervals

Movement
Directions Served
Maximum Queue (ft)
Average Queue (ft)
95th Queue (ft)
Link Distance (ft)
Upstream Blk Time (%)
Queuing Penalty (veh)
Storage Bay Dist (ft)
Storage Blk Time (%)
Queuing Penalty (veh)

Intersection: 23: 2100 North EB, Interval #1

Movement	SE
Directions Served	L
Maximum Queue (ft)	18
Average Queue (ft)	3
95th Queue (ft)	16
Link Distance (ft)	271
Upstream Blk Time (%)	
Queuing Penalty (veh)	
Storage Bay Dist (ft)	
Storage Blk Time (%)	
Queuing Penalty (veh)	

Intersection: 23: 2100 North EB, Interval #2

Movement	SE
Directions Served	L
Maximum Queue (ft)	13
Average Queue (ft)	2
95th Queue (ft)	13
Link Distance (ft)	271
Upstream Blk Time (%)	
Queuing Penalty (veh)	
Storage Bay Dist (ft)	
Storage Blk Time (%)	
Queuing Penalty (veh)	

Intersection: 23: 2100 North EB, Interval #3

Movement	SE
Directions Served	L
Maximum Queue (ft)	15
Average Queue (ft)	1
95th Queue (ft)	12
Link Distance (ft)	271
Upstream Blk Time (%)	
Queuing Penalty (veh)	
Storage Bay Dist (ft)	
Storage Blk Time (%)	
Queuing Penalty (veh)	

Intersection: 23: 2100 North EB, Interval #4

Movement	SE
Directions Served	L
Maximum Queue (ft)	24
Average Queue (ft)	6
95th Queue (ft)	26
Link Distance (ft)	271
Upstream Blk Time (%)	
Queuing Penalty (veh)	
Storage Bay Dist (ft)	
Storage Blk Time (%)	
Queuing Penalty (veh)	

Intersection: 23: 2100 North EB, All Intervals

Movement	SE
Directions Served	L
Maximum Queue (ft)	30
Average Queue (ft)	3
95th Queue (ft)	17
Link Distance (ft)	271
Upstream Blk Time (%)	
Queuing Penalty (veh)	
Storage Bay Dist (ft)	
Storage Blk Time (%)	
Queuing Penalty (veh)	

Intersection: 24: 2100 North EB, Interval #1

Movement
Directions Served
Maximum Queue (ft)
Average Queue (ft)
95th Queue (ft)
Link Distance (ft)
Upstream Blk Time (%)
Queuing Penalty (veh)
Storage Bay Dist (ft)
Storage Blk Time (%)
Queuing Penalty (veh)

Intersection: 24: 2100 North EB, Interval #2

Movement
Directions Served
Maximum Queue (ft)
Average Queue (ft)
95th Queue (ft)
Link Distance (ft)
Upstream Blk Time (%)
Queuing Penalty (veh)
Storage Bay Dist (ft)
Storage Blk Time (%)
Queuing Penalty (veh)

Intersection: 24: 2100 North EB, Interval #3

Movement
Directions Served
Maximum Queue (ft)
Average Queue (ft)
95th Queue (ft)
Link Distance (ft)
Upstream Blk Time (%)
Queuing Penalty (veh)
Storage Bay Dist (ft)
Storage Blk Time (%)
Queuing Penalty (veh)

Intersection: 24: 2100 North EB, Interval #4

Movement
Directions Served
Maximum Queue (ft)
Average Queue (ft)
95th Queue (ft)
Link Distance (ft)
Upstream Blk Time (%)
Queuing Penalty (veh)
Storage Bay Dist (ft)
Storage Blk Time (%)
Queuing Penalty (veh)

Intersection: 24: 2100 North EB, All Intervals

Movement
Directions Served
Maximum Queue (ft)
Average Queue (ft)
95th Queue (ft)
Link Distance (ft)
Upstream Blk Time (%)
Queuing Penalty (veh)
Storage Bay Dist (ft)
Storage Blk Time (%)
Queuing Penalty (veh)

Intersection: 25: 2100 North WB, Interval #1

Movement	NW
Directions Served	L
Maximum Queue (ft)	3
Average Queue (ft)	0
95th Queue (ft)	6
Link Distance (ft)	273
Upstream Blk Time (%)	
Queuing Penalty (veh)	
Storage Bay Dist (ft)	
Storage Blk Time (%)	
Queuing Penalty (veh)	

Intersection: 25: 2100 North WB, Interval #2

Movement	NW
Directions Served	L
Maximum Queue (ft)	3
Average Queue (ft)	1
95th Queue (ft)	7
Link Distance (ft)	273
Upstream Blk Time (%)	
Queuing Penalty (veh)	
Storage Bay Dist (ft)	
Storage Blk Time (%)	
Queuing Penalty (veh)	

Intersection: 25: 2100 North WB, Interval #3

Movement	NW
Directions Served	L
Maximum Queue (ft)	3
Average Queue (ft)	0
95th Queue (ft)	6
Link Distance (ft)	273
Upstream Blk Time (%)	
Queuing Penalty (veh)	
Storage Bay Dist (ft)	
Storage Blk Time (%)	
Queuing Penalty (veh)	

Intersection: 25: 2100 North WB, Interval #4

Movement	NW
Directions Served	L
Maximum Queue (ft)	3
Average Queue (ft)	0
95th Queue (ft)	6
Link Distance (ft)	273
Upstream Blk Time (%)	
Queuing Penalty (veh)	
Storage Bay Dist (ft)	
Storage Blk Time (%)	
Queuing Penalty (veh)	

Intersection: 25: 2100 North WB, All Intervals

Movement	NW
Directions Served	L
Maximum Queue (ft)	12
Average Queue (ft)	0
95th Queue (ft)	6
Link Distance (ft)	273
Upstream Blk Time (%)	
Queuing Penalty (veh)	
Storage Bay Dist (ft)	
Storage Blk Time (%)	
Queuing Penalty (veh)	

Intersection: 29: , Interval #1

Movement
Directions Served
Maximum Queue (ft)
Average Queue (ft)
95th Queue (ft)
Link Distance (ft)
Upstream Blk Time (%)
Queuing Penalty (veh)
Storage Bay Dist (ft)
Storage Blk Time (%)
Queuing Penalty (veh)

Intersection: 29: , Interval #2

Movement
Directions Served
Maximum Queue (ft)
Average Queue (ft)
95th Queue (ft)
Link Distance (ft)
Upstream Blk Time (%)
Queuing Penalty (veh)
Storage Bay Dist (ft)
Storage Blk Time (%)
Queuing Penalty (veh)

Intersection: 29: , Interval #3

Movement
Directions Served
Maximum Queue (ft)
Average Queue (ft)
95th Queue (ft)
Link Distance (ft)
Upstream Blk Time (%)
Queuing Penalty (veh)
Storage Bay Dist (ft)
Storage Blk Time (%)
Queuing Penalty (veh)

Intersection: 29: , Interval #4

Movement
Directions Served
Maximum Queue (ft)
Average Queue (ft)
95th Queue (ft)
Link Distance (ft)
Upstream Blk Time (%)
Queuing Penalty (veh)
Storage Bay Dist (ft)
Storage Blk Time (%)
Queuing Penalty (veh)

Intersection: 29: , All Intervals

Movement
Directions Served
Maximum Queue (ft)
Average Queue (ft)
95th Queue (ft)
Link Distance (ft)
Upstream Blk Time (%)
Queuing Penalty (veh)
Storage Bay Dist (ft)
Storage Blk Time (%)
Queuing Penalty (veh)

Intersection: 31: 400 East & Crossroads Blvd, Interval #1

Movement	EB	EB	WB	NB	SB
Directions Served	LT	R	LT	LTR	LTR
Maximum Queue (ft)	60	6	65	32	51
Average Queue (ft)	15	1	16	15	27
95th Queue (ft)	74	9	68	37	51
Link Distance (ft)	662		1678	460	746
Upstream Blk Time (%)					
Queuing Penalty (veh)					
Storage Bay Dist (ft)		150			
Storage Blk Time (%)	0		0		
Queuing Penalty (veh)	0		0		

Intersection: 31: 400 East & Crossroads Blvd, Interval #2

Movement	EB	WB	NB	SB
Directions Served	LT	LT	LTR	LTR
Maximum Queue (ft)	77	72	28	52
Average Queue (ft)	17	17	15	30
95th Queue (ft)	78	63	35	58
Link Distance (ft)	662	1678	460	746
Upstream Blk Time (%)				
Queuing Penalty (veh)				
Storage Bay Dist (ft)				
Storage Blk Time (%)	0	0		
Queuing Penalty (veh)	0	0		

Intersection: 31: 400 East & Crossroads Blvd, Interval #3

Movement	EB	WB	NB	SB
Directions Served	LT	LT	LTR	LTR
Maximum Queue (ft)	57	94	34	60
Average Queue (ft)	13	22	16	32
95th Queue (ft)	57	90	39	65
Link Distance (ft)	662	1678	460	746
Upstream Blk Time (%)				
Queuing Penalty (veh)				
Storage Bay Dist (ft)				
Storage Blk Time (%)		0		
Queuing Penalty (veh)		0		

Intersection: 31: 400 East & Crossroads Blvd, Interval #4

Movement	EB	WB	NB	SB
Directions Served	LT	LT	LTR	LTR
Maximum Queue (ft)	54	89	36	47
Average Queue (ft)	12	18	20	28
95th Queue (ft)	55	83	43	51
Link Distance (ft)	662	1678	460	746
Upstream Blk Time (%)				
Queuing Penalty (veh)				
Storage Bay Dist (ft)				
Storage Blk Time (%)		1		
Queuing Penalty (veh)		0		

Intersection: 31: 400 East & Crossroads Blvd, All Intervals

Movement	EB	EB	WB	NB	SB
Directions Served	LT	R	LT	LTR	LTR
Maximum Queue (ft)	103	6	131	48	78
Average Queue (ft)	14	0	18	16	29
95th Queue (ft)	66	4	77	39	57
Link Distance (ft)	662		1678	460	746
Upstream Blk Time (%)					
Queuing Penalty (veh)					
Storage Bay Dist (ft)		150			
Storage Blk Time (%)	0		0		
Queuing Penalty (veh)	0		0		

Intersection: 34: Crossroads Blvd, Interval #1

Movement	NB
Directions Served	R
Maximum Queue (ft)	6
Average Queue (ft)	1
95th Queue (ft)	8
Link Distance (ft)	242
Upstream Blk Time (%)	
Queuing Penalty (veh)	
Storage Bay Dist (ft)	
Storage Blk Time (%)	
Queuing Penalty (veh)	

Intersection: 34: Crossroads Blvd, Interval #2

Movement	NB
Directions Served	R
Maximum Queue (ft)	4
Average Queue (ft)	1
95th Queue (ft)	6
Link Distance (ft)	242
Upstream Blk Time (%)	
Queuing Penalty (veh)	
Storage Bay Dist (ft)	
Storage Blk Time (%)	
Queuing Penalty (veh)	

Intersection: 34: Crossroads Blvd, Interval #3

Movement	NB
Directions Served	R
Maximum Queue (ft)	4
Average Queue (ft)	1
95th Queue (ft)	6
Link Distance (ft)	242
Upstream Blk Time (%)	
Queuing Penalty (veh)	
Storage Bay Dist (ft)	
Storage Blk Time (%)	
Queuing Penalty (veh)	

Intersection: 34: Crossroads Blvd, Interval #4

Movement	NB
Directions Served	R
Maximum Queue (ft)	4
Average Queue (ft)	1
95th Queue (ft)	6
Link Distance (ft)	242
Upstream Blk Time (%)	
Queuing Penalty (veh)	
Storage Bay Dist (ft)	
Storage Blk Time (%)	
Queuing Penalty (veh)	

Intersection: 34: Crossroads Blvd, All Intervals

Movement	NB
Directions Served	R
Maximum Queue (ft)	12
Average Queue (ft)	1
95th Queue (ft)	7
Link Distance (ft)	242
Upstream Blk Time (%)	
Queuing Penalty (veh)	
Storage Bay Dist (ft)	
Storage Blk Time (%)	
Queuing Penalty (veh)	

Intersection: 38: , Interval #1

Movement	EB	EB	NB	NB	NB	SB	SB	SB
Directions Served	L	R	L	T	T	T	T	R
Maximum Queue (ft)	114	104	140	114	125	639	675	318
Average Queue (ft)	65	69	84	60	69	440	465	114
95th Queue (ft)	118	124	147	120	129	767	793	361
Link Distance (ft)	950	950		1023	1023	2142	2142	
Upstream Blk Time (%)								
Queuing Penalty (veh)								
Storage Bay Dist (ft)			150					150
Storage Blk Time (%)			1	0			21	
Queuing Penalty (veh)			5	0			21	

Intersection: 38: , Interval #2

Movement	EB	EB	NB	NB	NB	B5	SB	SB	SB
Directions Served	L	R	L	T	T	T	T	T	R
Maximum Queue (ft)	112	147	121	137	154	4	773	810	318
Average Queue (ft)	68	82	74	71	85	1	505	537	108
95th Queue (ft)	117	144	123	144	161	9	978	1021	351
Link Distance (ft)	950	950		1023	1023	442	2142	2142	
Upstream Blk Time (%)									
Queuing Penalty (veh)									
Storage Bay Dist (ft)			150						150
Storage Blk Time (%)			1	1				23	
Queuing Penalty (veh)			3	1				24	

Intersection: 38: , Interval #3

Movement	EB	EB	NB	NB	NB	SB	SB	SB
Directions Served	L	R	L	T	T	T	T	R
Maximum Queue (ft)	92	130	148	127	141	988	1002	350
Average Queue (ft)	55	67	80	66	79	672	705	122
95th Queue (ft)	102	135	145	138	147	1386	1392	376
Link Distance (ft)	950	950		1023	1023	2142	2142	
Upstream Blk Time (%)								
Queuing Penalty (veh)								
Storage Bay Dist (ft)			150					150
Storage Blk Time (%)			1	0			25	
Queuing Penalty (veh)			7	0			25	

Intersection: 38: , Interval #4

Movement	EB	EB	NB	NB	NB	SB	SB	SB
Directions Served	L	R	L	T	T	T	T	R
Maximum Queue (ft)	103	130	130	127	134	1030	949	350
Average Queue (ft)	59	63	78	63	80	607	621	106
95th Queue (ft)	114	132	143	134	141	1254	1219	351
Link Distance (ft)	950	950		1023	1023	2142	2142	
Upstream Blk Time (%)								
Queuing Penalty (veh)								
Storage Bay Dist (ft)			150					150
Storage Blk Time (%)			1	0			24	
Queuing Penalty (veh)			7	0			23	

Intersection: 38: , All Intervals

Movement	EB	EB	NB	NB	NB	B5	SB	SB	SB
Directions Served	L	R	L	T	T	T	T	T	R
Maximum Queue (ft)	137	173	169	164	180	4	1183	1147	350
Average Queue (ft)	62	70	79	65	78	0	556	582	112
95th Queue (ft)	113	135	140	135	146	4	1136	1143	360
Link Distance (ft)	950	950		1023	1023	442	2142	2142	
Upstream Blk Time (%)									
Queuing Penalty (veh)									
Storage Bay Dist (ft)			150						150
Storage Blk Time (%)			1	0				23	
Queuing Penalty (veh)			6	0				23	

Network Summary

Network wide Queuing Penalty, Interval #1: 218
Network wide Queuing Penalty, Interval #2: 325
Network wide Queuing Penalty, Interval #3: 481
Network wide Queuing Penalty, Interval #4: 345
Network wide Queuing Penalty, All Intervals: 342

HALES ENGINEERING
innovative transportation solutions

SimTraffic LOS Report

Project: Saratoga Springs - Cold Spring Ranch
Analysis Period: *Existing (2016) Plus Project - Mitigated*
Time Period: *Evening Peak Hour* **Project #:** *UT16-928*

Intersection: Redwood Road & Crossroads Blvd
Type: Signalized

Approach	Movement	Demand Volume	Volume Served		Delay/Veh (sec)	
			Avg	%	Avg	LOS
NB	L	241	253	105	60.1	*E*
	T	860	863	100	35.6	*D*
	R	132	133	101	4.9	*A*
	Subtotal	1,233	1,249	101	37.3	*D*
SB	L	310	292	94	65.2	*E*
	T	1,314	1,287	98	34.0	*C*
	R	605	581	96	11.6	*B*
	Subtotal	2,229	2,160	97	32.2	*C*
EB	L	410	411	100	52.9	*D*
	T	215	210	98	40.8	*D*
	R	25	28	111	15.9	*B*
	Subtotal	650	649	100	47.4	*D*
WB	L	200	196	98	56.2	*E*
	T	368	359	97	52.8	*D*
	R	180	178	99	17.0	*B*
	Subtotal	748	733	98	45.0	*D*
Total		4,861	4,791	99	37.7	*D*

Intersection: Redwood Road & Commerce Drive
Type: Signalized

Approach	Movement	Demand Volume	Volume Served		Delay/Veh (sec)	
			Avg	%	Avg	LOS
NB	L	83	82	98	48.3	*D*
	T	1,396	1,384	99	26.9	*C*
	R	24	24	99	10.5	*B*
	Subtotal	1,503	1,490	99	27.8	*C*
SB	L	129	127	98	58.9	*E*
	T	2,135	2,061	97	24.5	*C*
	R	372	368	99	16.2	*B*
	Subtotal	2,636	2,556	97	25.0	*C*
EB	L	162	167	103	54.9	*D*
	T	42	44	105	46.8	*D*
	R	90	91	101	19.1	*B*
	Subtotal	294	302	103	42.9	*D*
WB	L	22	24	108	51.8	*D*
	T	34	34	101	46.5	*D*
	R	78	75	96	20.0	*B*
	Subtotal	134	133	99	32.5	*C*
Total		4,567	4,481	98	27.4	*C*

HALES ENGINEERING
innovative transportation solutions

SimTraffic LOS Report

Project: Saratoga Springs - Cold Spring Ranch
Analysis Period: *Existing (2016) Plus Project - Mitigated*
Time Period: *Evening Peak Hour* **Project #:** *UT16-928*

Intersection: Redwood Road & Aspen Hills Blvd
Type: Signalized

Approach	Movement	Demand Volume	Volume Served		Delay/Veh (sec)	
			Avg	%	Avg	LOS
NB	L	23	20	86	227.2	*F*
	T	1,414	1,398	99	15.5	*B*
	R	161	162	101	8.6	*A*
	Subtotal	1,598	1,580	99	17.5	*B*
SB	L	300	288	96	74.2	*E*
	T	2,405	2,375	99	29.4	*C*
	R	50	50	100	20.1	*C*
	Subtotal	2,755	2,713	98	34.0	*C*
EB	L	9	7	78	53.0	*D*
	R	24	24	100	47.4	*D*
	Subtotal	33	31	94	48.7	*D*
WB	L	265	263	99	113.2	*F*
	R	270	267	99	29.9	*C*
	Subtotal	535	530	99	71.2	*E*
Total		4,921	4,854	99	32.9	*C*

Intersection: Redwood Road & Sergeant Court Drive
Type: Unsignalized

Approach	Movement	Demand Volume	Volume Served		Delay/Veh (sec)	
			Avg	%	Avg	LOS
NB	L	15	13	85	220.2	*F*
	T	1,488	1,478	99	6.3	*A*
	R	124	121	97	5.0	*A*
	Subtotal	1,627	1,612	99	7.9	*A*
SB	L	160	152	95	41.4	*E*
	T	2,517	2,482	99	20.3	*C*
	R	17	16	93	17.0	*C*
	Subtotal	2,694	2,650	98	21.5	*C*
EB	L	5	3	60	972.2	*F*
	R	26	20	76	510.7	*F*
	Subtotal	***31***	***23***	***74***	***570.9***	***F***
WB	L	10	1	10	1397.3	*F*
	R	160	165	103	20.5	*C*
	Subtotal	170	166	98	28.8	*D*
Total		4,522	4,451	98	23.3	*C*

HALES ENGINEERING

SimTraffic LOS Report

Project: Saratoga Springs - Cold Spring Ranch
Analysis Period: *Existing (2016) Plus Project - Mitigated*
Time Period: *Evening Peak Hour* **Project #:** *UT16-928*

Intersection: 3600 West & 2100 North WB
Type: Unsignalized

Approach	Movement	Demand Volume	Volume Served		Delay/Veh (sec)	
			Avg	%	Avg	LOS
NB	L	43	42	98	40.4	*E*
	T	1	1	100	51.5	*F*
	Subtotal	44	43	98	40.7	*E*
SB	T	21	21	99	43.8	*E*
	R	1	2	200	13.3	*B*
	Subtotal	***22***	***23***	***105***	***41.1***	***E***
WB	L	234	241	103	0.5	*A*
	T	1,750	1,750	100	0.2	*A*
	R	4	5	125	0.0	*A*
	Subtotal	1,988	1,996	100	0.2	*A*
Total		2,054	2,062	100	1.5	*A*

Intersection: 3600 West & 2100 North EB
Type: Unsignalized

Approach	Movement	Demand Volume	Volume Served		Delay/Veh (sec)	
			Avg	%	Avg	LOS
NB	T	43	42	98	14.6	*B*
	R	182	181	99	10.0	*A*
	Subtotal	225	223	99	10.9	*B*
SB	L	13	12	91	29.1	*D*
	T	242	250	103	32.6	*D*
	Subtotal	***255***	***262***	***103***	***32.4***	***D***
EB	L	1	0	0		
	T	954	954	100	0.4	*A*
	R	10	9	88	0.1	*A*
	Subtotal	965	963	100	0.4	*A*
Total		1,446	1,448	100	7.8	*A*

SimTraffic LOS Report

Project: Saratoga Springs - Cold Spring Ranch
Analysis Period: *Existing (2016) Plus Project - Mitigated*
Time Period: *Evening Peak Hour* **Project #:** *UT16-928*

Intersection: 400 East & Crossroads Blvd
Type: Unsignalized

Approach	Movement	Demand Volume	Volume Served		Delay/Veh (sec)	
			Avg	%	Avg	LOS
NB	L	8	7	88	21.4	*C*
	T	3	3	100	23.7	*C*
	R	16	19	117	7.5	*A*
	Subtotal	27	29	107	12.5	*B*
SB	L	38	40	106	29.7	*D*
	T	14	14	98	31.6	*D*
	R	53	56	106	17.0	*C*
	Subtotal	***105***	***110***	***105***	***23.5***	***C***
EB	L	36	33	92	6.6	*A*
	T	592	577	97	2.9	*A*
	R	10	10	98	0.9	*A*
	Subtotal	638	620	97	3.1	*A*
WB	L	31	28	91	7.4	*A*
	T	687	673	98	3.2	*A*
	R	45	50	112	1.9	*A*
	Subtotal	763	751	98	3.3	*A*
Total		1,533	1,510	98	4.9	*A*

2: Redwood Road & Crossroads Blvd Performance by movement Interval #1 5:00

Movement	EBL	EBT	EBR	WBL	WBT	WBR	NBL	NBT	NBR	SBL	SBT	SBR
Denied Delay (hr)	0.1	0.0	0.0	0.0	0.0	0.0	0.0	0.0	0.0	0.0	0.0	0.0
Denied Del/Veh (s)	2.6	0.3	2.8	0.0	0.0	0.0	2.6	0.5	2.4	0.2	0.0	0.0
Total Delay (hr)	1.6	0.6	0.0	0.7	1.3	0.2	1.0	2.1	0.0	1.2	2.6	0.4
Total Del/Veh (s)	50.7	38.9	14.6	49.9	48.4	15.8	54.3	33.7	4.8	56.5	29.6	10.4
Vehicles Entered	103	56	8	48	90	42	60	209	33	75	312	137
Vehicles Exited	106	56	7	49	94	43	62	198	34	75	299	133
Hourly Exit Rate	424	224	28	196	376	172	248	792	136	300	1196	532
Input Volume	403	211	25	196	362	177	237	845	130	305	1291	594
% of Volume	105	106	112	100	104	97	105	94	105	98	93	90

2: Redwood Road & Crossroads Blvd Performance by movement Interval #1 5:00

Movement	All
Denied Delay (hr)	0.2
Denied Del/Veh (s)	0.6
Total Delay (hr)	12.0
Total Del/Veh (s)	34.7
Vehicles Entered	1173
Vehicles Exited	1156
Hourly Exit Rate	4624
Input Volume	4776
% of Volume	97

2: Redwood Road & Crossroads Blvd Performance by movement Interval #2 5:15

Movement	EBL	EBT	EBR	WBL	WBT	WBR	NBL	NBT	NBR	SBL	SBT	SBR
Denied Delay (hr)	0.1	0.0	0.0	0.0	0.0	0.0	0.0	0.0	0.0	0.0	0.0	0.0
Denied Del/Veh (s)	2.6	0.3	3.0	0.0	0.0	0.0	2.5	0.5	2.4	0.2	0.0	0.0
Total Delay (hr)	1.7	0.7	0.0	0.8	1.4	0.2	1.1	2.4	0.0	1.4	3.1	0.5
Total Del/Veh (s)	51.4	41.2	15.9	51.9	49.3	18.3	54.8	34.6	4.8	65.7	32.0	11.9
Vehicles Entered	112	57	8	52	94	48	66	226	33	74	321	146
Vehicles Exited	115	58	8	52	95	46	67	231	33	66	310	145
Hourly Exit Rate	460	232	32	208	380	184	268	924	132	264	1240	580
Input Volume	432	226	26	211	387	189	254	905	139	326	1383	637
% of Volume	106	103	123	99	98	97	106	102	95	81	90	91

2: Redwood Road & Crossroads Blvd Performance by movement Interval #2 5:15

Movement	All
Denied Delay (hr)	0.2
Denied Del/Veh (s)	0.6
Total Delay (hr)	13.4
Total Del/Veh (s)	36.5
Vehicles Entered	1237
Vehicles Exited	1226
Hourly Exit Rate	4904
Input Volume	5115
% of Volume	96

2: Redwood Road & Crossroads Blvd Performance by movement Interval #3 5:30

Movement	EBL	EBT	EBR	WBL	WBT	WBR	NBL	NBT	NBR	SBL	SBT	SBR
Denied Delay (hr)	0.1	0.0	0.0	0.0	0.0	0.0	0.0	0.0	0.0	0.0	0.0	0.0
Denied Del/Veh (s)	2.7	0.3	3.4	0.0	0.0	0.0	2.4	0.4	2.6	0.2	0.0	0.0
Total Delay (hr)	1.4	0.6	0.0	0.8	1.4	0.2	1.1	2.0	0.0	1.5	3.4	0.5
Total Del/Veh (s)	50.8	39.5	15.2	57.1	53.3	15.3	58.8	31.5	4.6	61.6	33.5	11.2
Vehicles Entered	96	50	6	47	87	42	60	209	35	73	327	148
Vehicles Exited	91	48	6	49	90	44	64	216	34	76	343	149
Hourly Exit Rate	364	192	24	196	360	176	256	864	136	304	1372	596
Input Volume	403	211	25	196	362	177	237	845	130	305	1291	594
% of Volume	90	91	96	100	99	99	108	102	105	100	106	100

2: Redwood Road & Crossroads Blvd Performance by movement Interval #3 5:30

Movement	All
Denied Delay (hr)	0.2
Denied Del/Veh (s)	0.5
Total Delay (hr)	12.8
Total Del/Veh (s)	36.0
Vehicles Entered	1180
Vehicles Exited	1210
Hourly Exit Rate	4840
Input Volume	4776
% of Volume	101

2: Redwood Road & Crossroads Blvd Performance by movement Interval #4 5:45

Movement	EBL	EBT	EBR	WBL	WBT	WBR	NBL	NBT	NBR	SBL	SBT	SBR
Denied Delay (hr)	0.1	0.0	0.0	0.0	0.0	0.0	0.0	0.0	0.0	0.0	0.0	0.0
Denied Del/Veh (s)	2.6	0.3	2.9	0.0	0.0	0.0	2.5	0.4	2.5	0.1	0.0	0.0
Total Delay (hr)	1.5	0.6	0.0	0.8	1.4	0.2	1.0	2.1	0.0	1.3	3.1	0.5
Total Del/Veh (s)	47.9	37.1	16.0	56.6	53.4	16.6	57.7	34.2	4.8	57.7	33.3	11.4
Vehicles Entered	105	51	6	50	89	46	60	211	31	73	323	149
Vehicles Exited	100	48	6	45	80	45	60	217	32	75	335	154
Hourly Exit Rate	400	192	24	180	320	180	240	868	128	300	1340	616
Input Volume	403	211	25	196	362	177	237	845	130	305	1291	594
% of Volume	99	91	96	92	88	102	101	103	98	98	104	104

2: Redwood Road & Crossroads Blvd Performance by movement Interval #4 5:45

Movement	All
Denied Delay (hr)	0.2
Denied Del/Veh (s)	0.5
Total Delay (hr)	12.6
Total Del/Veh (s)	36.0
Vehicles Entered	1194
Vehicles Exited	1197
Hourly Exit Rate	4788
Input Volume	4776
% of Volume	100

2: Redwood Road & Crossroads Blvd Performance by movement Entire Run

Movement	EBL	EBT	EBR	WBL	WBT	WBR	NBL	NBT	NBR	SBL	SBT	SBR
Denied Delay (hr)	0.3	0.0	0.0	0.0	0.0	0.0	0.2	0.1	0.1	0.0	0.0	0.0
Denied Del/Veh (s)	2.6	0.3	3.0	0.0	0.0	0.0	2.5	0.4	2.5	0.2	0.0	0.0
Total Delay (hr)	6.3	2.5	0.1	3.1	5.4	0.8	4.3	8.6	0.2	5.4	12.2	1.9
Total Del/Veh (s)	52.9	40.8	15.9	56.2	52.8	17.0	60.1	35.6	4.9	65.2	34.0	11.6
Vehicles Entered	416	214	28	197	361	178	247	856	132	296	1283	579
Vehicles Exited	411	210	28	196	359	178	253	863	133	292	1287	581
Hourly Exit Rate	411	210	28	196	359	178	253	863	133	292	1287	581
Input Volume	410	215	25	200	368	180	241	860	132	310	1314	605
% of Volume	100	98	111	98	97	99	105	100	101	94	98	96

2: Redwood Road & Crossroads Blvd Performance by movement Entire Run

Movement	All
Denied Delay (hr)	0.7
Denied Del/Veh (s)	0.5
Total Delay (hr)	50.8
Total Del/Veh (s)	37.7
Vehicles Entered	4787
Vehicles Exited	4791
Hourly Exit Rate	4791
Input Volume	4861
% of Volume	99

3: Redwood Road & Commerce Drive Performance by movement Interval #1 5:00

Movement	EBL	EBT	EBR	WBL	WBT	WBR	NBL	NBT	NBR	SBL	SBT	SBR
Denied Delay (hr)	0.0	0.0	0.0	0.0	0.0	0.0	0.0	0.0	0.0	0.0	0.1	0.0
Denied Del/Veh (s)	2.7	0.4	2.6	4.1	0.4	3.8	0.0	0.0	0.0	0.0	0.7	1.2
Total Delay (hr)	0.6	0.1	0.1	0.1	0.1	0.1	0.2	2.5	0.0	0.5	2.7	0.3
Total Del/Veh (s)	47.0	43.1	16.1	53.3	46.8	20.1	43.1	25.8	8.4	55.9	18.9	11.4
Vehicles Entered	40	10	21	5	8	17	19	335	5	30	505	92
Vehicles Exited	42	10	22	6	8	17	18	344	4	32	502	91
Hourly Exit Rate	168	40	88	24	32	68	72	1376	16	128	2008	364
Input Volume	159	41	88	22	33	77	82	1371	24	127	2098	365
% of Volume	106	98	100	109	97	88	88	100	67	101	96	100

3: Redwood Road & Commerce Drive Performance by movement Interval #1 5:00

Movement	All
Denied Delay (hr)	0.2
Denied Del/Veh (s)	0.7
Total Delay (hr)	7.4
Total Del/Veh (s)	23.7
Vehicles Entered	1087
Vehicles Exited	1096
Hourly Exit Rate	4384
Input Volume	4487
% of Volume	98

3: Redwood Road & Commerce Drive Performance by movement Interval #2 5:15

Movement	EBL	EBT	EBR	WBL	WBT	WBR	NBL	NBT	NBR	SBL	SBT	SBR
Denied Delay (hr)	0.0	0.0	0.0	0.0	0.0	0.0	0.0	0.0	0.0	0.0	0.2	0.0
Denied Del/Veh (s)	2.8	0.7	2.5	3.6	0.3	3.8	0.1	0.0	0.1	0.1	1.1	1.4
Total Delay (hr)	0.7	0.1	0.1	0.1	0.1	0.1	0.3	2.9	0.0	0.5	3.6	0.4
Total Del/Veh (s)	51.9	40.4	17.5	44.7	42.3	18.5	50.2	27.8	11.2	53.6	24.4	16.2
Vehicles Entered	42	11	25	7	10	20	21	377	7	32	527	94
Vehicles Exited	42	12	24	6	10	19	21	363	7	34	518	94
Hourly Exit Rate	168	48	96	24	40	76	84	1452	28	136	2072	376
Input Volume	171	44	95	23	36	82	87	1470	25	136	2245	392
% of Volume	98	109	101	104	111	93	97	99	112	100	92	96

3: Redwood Road & Commerce Drive Performance by movement Interval #2 5:15

Movement	All
Denied Delay (hr)	0.3
Denied Del/Veh (s)	0.9
Total Delay (hr)	9.1
Total Del/Veh (s)	27.3
Vehicles Entered	1173
Vehicles Exited	1150
Hourly Exit Rate	4600
Input Volume	4806
% of Volume	96

3: Redwood Road & Commerce Drive Performance by movement Interval #3 5:30

Movement	EBL	EBT	EBR	WBL	WBT	WBR	NBL	NBT	NBR	SBL	SBT	SBR
Denied Delay (hr)	0.0	0.0	0.0	0.0	0.0	0.0	0.0	0.0	0.0	0.0	0.5	0.1
Denied Del/Veh (s)	2.6	0.6	2.8	3.9	0.5	4.0	0.1	0.0	0.0	1.9	3.7	2.2
Total Delay (hr)	0.7	0.1	0.1	0.1	0.1	0.1	0.3	2.6	0.0	0.5	4.3	0.5
Total Del/Veh (s)	54.5	40.2	21.5	45.9	38.3	20.0	42.6	26.3	10.2	59.9	28.3	19.7
Vehicles Entered	41	10	24	6	9	19	20	337	7	31	528	92
Vehicles Exited	42	10	23	6	9	20	20	337	8	31	522	92
Hourly Exit Rate	168	40	92	24	36	80	80	1348	32	124	2088	368
Input Volume	159	41	88	22	33	77	82	1371	24	127	2098	365
% of Volume	106	98	105	109	109	104	98	98	133	98	100	101

3: Redwood Road & Commerce Drive Performance by movement Interval #3 5:30

Movement	All
Denied Delay (hr)	0.7
Denied Del/Veh (s)	2.2
Total Delay (hr)	9.5
Total Del/Veh (s)	29.1
Vehicles Entered	1124
Vehicles Exited	1120
Hourly Exit Rate	4480
Input Volume	4487
% of Volume	100

3: Redwood Road & Commerce Drive Performance by movement Interval #4 5:45

Movement	EBL	EBT	EBR	WBL	WBT	WBR	NBL	NBT	NBR	SBL	SBT	SBR
Denied Delay (hr)	0.0	0.0	0.0	0.0	0.0	0.0	0.0	0.0	0.0	0.0	0.3	0.0
Denied Del/Veh (s)	2.7	0.6	2.9	3.9	0.3	3.9	0.0	0.1	0.0	0.1	1.9	0.8
Total Delay (hr)	0.6	0.2	0.1	0.1	0.1	0.1	0.3	2.5	0.0	0.6	3.6	0.4
Total Del/Veh (s)	51.7	47.8	18.0	48.4	52.0	18.6	45.7	24.6	10.1	59.7	23.6	15.6
Vehicles Entered	40	11	21	6	6	19	22	348	5	33	527	92
Vehicles Exited	42	12	22	6	6	20	22	339	5	31	519	91
Hourly Exit Rate	168	48	88	24	24	80	88	1356	20	124	2076	364
Input Volume	159	41	88	22	33	77	82	1371	24	127	2098	365
% of Volume	106	117	100	109	73	104	107	99	83	98	99	100

3: Redwood Road & Commerce Drive Performance by movement Interval #4 5:45

Movement	All
Denied Delay (hr)	0.4
Denied Del/Veh (s)	1.2
Total Delay (hr)	8.6
Total Del/Veh (s)	26.1
Vehicles Entered	1130
Vehicles Exited	1115
Hourly Exit Rate	4460
Input Volume	4487
% of Volume	99

3: Redwood Road & Commerce Drive Performance by movement Entire Run

Movement	EBL	EBT	EBR	WBL	WBT	WBR	NBL	NBT	NBR	SBL	SBT	SBR
Denied Delay (hr)	0.1	0.0	0.1	0.0	0.0	0.1	0.0	0.0	0.0	0.0	1.1	0.1
Denied Del/Veh (s)	2.7	0.6	2.7	4.0	0.4	3.9	0.1	0.0	0.0	0.5	1.9	1.4
Total Delay (hr)	2.6	0.6	0.5	0.3	0.4	0.4	1.1	10.6	0.1	2.1	14.3	1.7
Total Del/Veh (s)	54.9	46.8	19.1	51.8	46.5	20.0	48.3	26.9	10.5	58.9	24.5	16.2
Vehicles Entered	162	42	90	23	33	75	82	1397	24	127	2086	369
Vehicles Exited	167	44	91	24	34	75	82	1384	24	127	2061	368
Hourly Exit Rate	167	44	91	24	34	75	82	1384	24	127	2061	368
Input Volume	162	42	90	22	34	78	83	1396	24	129	2135	372
% of Volume	103	105	101	108	101	96	98	99	99	98	97	99

3: Redwood Road & Commerce Drive Performance by movement Entire Run

Movement	All
Denied Delay (hr)	1.6
Denied Del/Veh (s)	1.3
Total Delay (hr)	34.7
Total Del/Veh (s)	27.4
Vehicles Entered	4510
Vehicles Exited	4481
Hourly Exit Rate	4481
Input Volume	4567
% of Volume	98

11: Redwood Road & Aspen Hills Blvd Performance by movement Interval #1 5:00

Movement	EBL	EBR	WBL	WBR	NBL	NBT	NBR	SBL	SBT	SBR	All
Denied Delay (hr)	0.0	0.0	0.1	0.1	0.0	0.0	0.0	0.0	0.0	0.0	0.1
Denied Del/Veh (s)	1.4	3.0	3.5	3.5	0.0	0.0	0.0	0.0	0.0	0.0	0.4
Total Delay (hr)	0.0	0.1	1.8	0.5	0.2	1.3	0.1	1.2	3.9	0.0	9.2
Total Del/Veh (s)	40.3	44.3	86.4	24.0	143.5	13.4	7.3	59.2	23.0	14.6	26.6
Vehicles Entered	2	5	64	65	5	338	40	69	590	11	1189
Vehicles Exited	2	5	65	64	4	334	39	65	587	11	1176
Hourly Exit Rate	8	20	260	256	16	1336	156	260	2348	44	4704
Input Volume	9	24	260	265	23	1389	158	295	2363	49	4835
% of Volume	89	83	100	97	70	96	99	88	99	90	97

11: Redwood Road & Aspen Hills Blvd Performance by movement Interval #2 5:15

Movement	EBL	EBR	WBL	WBR	NBL	NBT	NBR	SBL	SBT	SBR	All
Denied Delay (hr)	0.0	0.0	0.1	0.1	0.0	0.0	0.0	0.0	0.0	0.0	0.1
Denied Del/Veh (s)	2.6	2.7	3.4	3.5	0.0	0.0	0.0	0.0	0.0	0.0	0.4
Total Delay (hr)	0.0	0.1	2.1	0.6	0.4	1.8	0.1	1.6	5.5	0.1	12.2
Total Del/Veh (s)	56.8	43.6	91.7	28.4	185.8	17.5	9.5	70.3	30.5	21.5	33.1
Vehicles Entered	2	7	70	67	6	365	42	73	621	14	1267
Vehicles Exited	2	7	68	66	5	361	43	73	612	14	1251
Hourly Exit Rate	8	28	272	264	20	1444	172	292	2448	56	5004
Input Volume	9	24	279	284	24	1488	169	316	2532	53	5178
% of Volume	89	117	97	93	83	97	102	92	97	106	97

11: Redwood Road & Aspen Hills Blvd Performance by movement Interval #3 5:30

Movement	EBL	EBR	WBL	WBR	NBL	NBT	NBR	SBL	SBT	SBR	All
Denied Delay (hr)	0.0	0.0	0.1	0.1	0.0	0.0	0.0	0.0	0.0	0.0	0.1
Denied Del/Veh (s)	3.4	3.0	3.5	3.4	0.0	0.0	0.0	0.0	0.0	0.0	0.4
Total Delay (hr)	0.0	0.1	2.2	0.7	0.4	1.6	0.1	1.6	5.3	0.1	12.0
Total Del/Veh (s)	63.2	43.8	109.2	32.0	180.6	15.4	8.3	69.3	30.5	21.3	33.4
Vehicles Entered	1	5	61	70	5	351	39	75	592	12	1211
Vehicles Exited	1	6	64	72	6	351	39	77	590	12	1218
Hourly Exit Rate	4	24	256	288	24	1404	156	308	2360	48	4872
Input Volume	9	24	260	265	23	1389	158	295	2363	49	4835
% of Volume	44	100	98	109	104	101	99	104	100	98	101

11: Redwood Road & Aspen Hills Blvd Performance by movement Interval #4 5:45

Movement	EBL	EBR	WBL	WBR	NBL	NBT	NBR	SBL	SBT	SBR	All
Denied Delay (hr)	0.0	0.0	0.1	0.1	0.0	0.0	0.0	0.0	0.0	0.0	0.1
Denied Del/Veh (s)	4.2	2.8	3.4	3.5	0.0	0.0	0.0	0.0	0.0	0.0	0.4
Total Delay (hr)	0.0	0.1	2.4	0.6	0.4	1.4	0.1	1.6	4.9	0.1	11.5
Total Del/Veh (s)	56.7	43.2	117.7	29.3	224.7	13.6	8.5	74.1	28.5	19.1	32.5
Vehicles Entered	2	6	64	65	6	355	42	70	578	12	1200
Vehicles Exited	2	6	66	65	5	351	41	72	585	13	1206
Hourly Exit Rate	8	24	264	260	20	1404	164	288	2340	52	4824
Input Volume	9	24	260	265	23	1389	158	295	2363	49	4835
% of Volume	89	100	102	98	87	101	104	98	99	106	100

11: Redwood Road & Aspen Hills Blvd Performance by movement Entire Run

Movement	EBL	EBR	WBL	WBR	NBL	NBT	NBR	SBL	SBT	SBR	All
Denied Delay (hr)	0.0	0.0	0.2	0.3	0.0	0.0	0.0	0.0	0.0	0.0	0.5
Denied Del/Veh (s)	2.8	2.7	3.5	3.5	0.0	0.0	0.0	0.0	0.0	0.0	0.4
Total Delay (hr)	0.1	0.3	8.5	2.2	1.4	6.1	0.4	6.0	19.6	0.3	44.9
Total Del/Veh (s)	53.0	47.4	113.2	29.9	227.2	15.5	8.6	74.2	29.4	20.1	32.9
Vehicles Entered	7	24	258	266	22	1409	162	288	2381	50	4867
Vehicles Exited	7	24	263	267	20	1398	162	288	2375	50	4854
Hourly Exit Rate	7	24	263	267	20	1398	162	288	2375	50	4854
Input Volume	9	24	265	270	23	1414	161	300	2405	50	4921
% of Volume	78	100	99	99	86	99	101	96	99	100	99

13: Redwood Road & Sergeant Court Drive Performance by movement Interval #1 5:00

Movement	EBL	EBR	WBL	WBR	NBL	NBT	NBR	SBL	SBT	SBR	All
Denied Delay (hr)	0.0	0.0	0.0	0.0	0.0	0.0	0.0	0.0	0.0	0.0	0.1
Denied Del/Veh (s)	0.1	3.7	0.6	3.9	0.4	0.0	0.1	0.0	0.0	0.0	0.2
Total Delay (hr)	0.2	0.5	0.2	0.2	0.2	0.6	0.0	0.4	1.9	0.0	4.1
Total Del/Veh (s)	593.3	236.2	315.7	18.5	191.3	6.0	4.9	32.4	10.8	9.0	13.2
Vehicles Entered	1	6	2	41	4	362	30	38	616	4	1104
Vehicles Exited	0	3	0	40	3	357	30	37	603	4	1077
Hourly Exit Rate	0	12	0	160	12	1428	120	148	2412	16	4308
Input Volume	5	26	10	157	15	1462	122	157	2473	17	4444
% of Volume	0	46	0	102	80	98	98	94	98	94	97

13: Redwood Road & Sergeant Court Drive Performance by movement Interval #2 5:15

Movement	EBL	EBR	WBL	WBR	NBL	NBT	NBR	SBL	SBT	SBR	All
Denied Delay (hr)	0.0	0.0	0.0	0.0	0.0	0.0	0.0	0.0	0.0	0.0	0.1
Denied Del/Veh (s)	0.1	3.7	1.0	3.8	0.6	0.0	0.1	0.0	0.0	0.0	0.2
Total Delay (hr)	0.5	1.0	0.6	0.3	0.3	0.7	0.0	0.5	3.3	0.0	7.2
Total Del/Veh (s)	546.6	399.7	579.4	24.2	249.5	6.3	5.0	41.5	17.6	14.6	21.6
Vehicles Entered	2	6	2	43	3	388	30	43	641	4	1162
Vehicles Exited	1	5	0	43	3	381	29	43	629	4	1138
Hourly Exit Rate	4	20	0	172	12	1524	116	172	2516	16	4552
Input Volume	5	27	10	168	16	1564	131	168	2650	18	4757
% of Volume	80	74	0	102	75	97	89	102	95	89	96

13: Redwood Road & Sergeant Court Drive Performance by movement Interval #3 5:30

Movement	EBL	EBR	WBL	WBR	NBL	NBT	NBR	SBL	SBT	SBR	All
Denied Delay (hr)	0.0	0.0	0.0	0.0	0.0	0.0	0.0	0.0	0.0	0.0	0.1
Denied Del/Veh (s)	0.1	3.7	0.6	3.9	0.1	0.0	0.0	0.0	0.0	0.0	0.2
Total Delay (hr)	0.4	1.0	1.2	0.2	0.2	0.6	0.0	0.5	5.2	0.0	9.4
Total Del/Veh (s)	496.3	315.1	708.9	20.2	185.8	6.2	5.1	45.0	28.4	25.1	28.8
Vehicles Entered	1	7	3	40	4	362	30	36	619	4	1106
Vehicles Exited	2	7	0	41	4	366	31	37	623	4	1115
Hourly Exit Rate	8	28	0	164	16	1464	124	148	2492	16	4460
Input Volume	5	26	10	157	15	1462	122	157	2473	17	4444
% of Volume	160	108	0	104	107	100	102	94	101	94	100

13: Redwood Road & Sergeant Court Drive Performance by movement Interval #4 5:45

Movement	EBL	EBR	WBL	WBR	NBL	NBT	NBR	SBL	SBT	SBR	All
Denied Delay (hr)	0.0	0.0	0.0	0.0	0.0	0.0	0.0	0.0	0.0	0.0	0.1
Denied Del/Veh (s)	0.1	3.6	1.0	3.9	0.4	0.0	0.1	0.0	0.0	0.0	0.2
Total Delay (hr)	0.3	1.0	1.9	0.2	0.2	0.6	0.0	0.4	3.8	0.0	8.4
Total Del/Veh (s)	569.5	442.3	752.3	16.5	192.2	6.1	4.7	37.2	20.9	19.1	26.0
Vehicles Entered	1	5	2	41	3	366	30	36	618	4	1106
Vehicles Exited	0	4	0	41	2	374	31	36	628	4	1120
Hourly Exit Rate	0	16	0	164	8	1496	124	144	2512	16	4480
Input Volume	5	26	10	157	15	1462	122	157	2473	17	4444
% of Volume	0	62	0	104	53	102	102	92	102	94	101

13: Redwood Road & Sergeant Court Drive Performance by movement Entire Run

Movement	EBL	EBR	WBL	WBR	NBL	NBT	NBR	SBL	SBT	SBR	All
Denied Delay (hr)	0.0	0.0	0.0	0.2	0.0	0.0	0.0	0.0	0.0	0.0	0.2
Denied Del/Veh (s)	0.1	3.7	0.8	3.9	0.4	0.0	0.1	0.0	0.0	0.0	0.2
Total Delay (hr)	1.4	3.4	3.9	0.9	0.9	2.6	0.2	1.8	14.1	0.1	29.2
Total Del/Veh (s)	972.2	510.7	1397.3	20.5	220.2	6.3	5.0	41.4	20.3	17.0	23.3
Vehicles Entered	5	24	9	165	14	1478	121	152	2493	16	4477
Vehicles Exited	3	20	1	165	13	1478	121	152	2482	16	4451
Hourly Exit Rate	3	20	1	165	13	1478	121	152	2482	16	4451
Input Volume	5	26	10	160	15	1488	124	160	2517	17	4522
% of Volume	60	76	10	103	85	99	97	95	99	93	98

19: 3600 West & 2100 North WB Performance by movement Interval #1 5:00

Movement	WBL	WBT	WBR	NBL	NBT	SBT	SBR	All
Denied Delay (hr)	0.0	0.0	0.0	0.0	0.0	0.0	0.0	0.0
Denied Del/Veh (s)	0.0	0.0	0.0	0.0		0.1		0.0
Total Delay (hr)	0.0	0.0	0.0	0.1	0.0	0.1	0.0	0.2
Total Del/Veh (s)	0.2	0.2	0.0	36.1		42.7		1.4
Vehicles Entered	60	432	1	10	0	5	0	508
Vehicles Exited	60	432	1	10	0	4	0	507
Hourly Exit Rate	240	1728	4	40	0	16	0	2028
Input Volume	230	1719	4	42	1	21	1	2018
% of Volume	104	101	100	95	0	76	0	100

19: 3600 West & 2100 North WB Performance by movement Interval #2 5:15

Movement	WBL	WBT	WBR	NBL	NBT	SBT	SBR	All
Denied Delay (hr)	0.0	0.0	0.0	0.0	0.0	0.0	0.0	0.0
Denied Del/Veh (s)	0.0	0.0	0.0	0.0		0.1	0.1	0.0
Total Delay (hr)	0.0	0.0	0.0	0.1	0.0	0.1	0.0	0.2
Total Del/Veh (s)	0.2	0.2	0.0	46.8		35.1	4.3	1.6
Vehicles Entered	62	464	1	11	0	5	1	544
Vehicles Exited	62	463	1	11	0	6	0	543
Hourly Exit Rate	248	1852	4	44	0	24	0	2172
Input Volume	246	1843	4	45	1	22	1	2162
% of Volume	101	100	100	98	0	109	0	100

19: 3600 West & 2100 North WB Performance by movement Interval #3 5:30

Movement	WBL	WBT	WBR	NBL	NBT	SBT	SBR	All
Denied Delay (hr)	0.0	0.0	0.0	0.0	0.0	0.0	0.0	0.0
Denied Del/Veh (s)	0.0	0.0	0.0	0.0		0.1		0.0
Total Delay (hr)	0.0	0.0	0.0	0.1	0.0	0.1	0.0	0.2
Total Del/Veh (s)	0.6	0.2	0.0	28.7		38.5		1.3
Vehicles Entered	61	429	2	10	0	5	0	507
Vehicles Exited	61	429	2	10	0	5	0	507
Hourly Exit Rate	244	1716	8	40	0	20	0	2028
Input Volume	230	1719	4	42	1	21	1	2018
% of Volume	106	100	200	95	0	95	0	100

19: 3600 West & 2100 North WB Performance by movement Interval #4 5:45

Movement	WBL	WBT	WBR	NBL	NBT	SBT	SBR	All
Denied Delay (hr)	0.0	0.0	0.0	0.0	0.0	0.0	0.0	0.0
Denied Del/Veh (s)	0.0	0.0	0.0	0.0		0.1	0.1	0.0
Total Delay (hr)	0.0	0.0	0.0	0.1	0.0	0.1	0.0	0.3
Total Del/Veh (s)	0.8	0.2	0.0	44.7		44.1	5.7	1.9
Vehicles Entered	58	426	1	11	0	6	1	503
Vehicles Exited	58	426	1	12	0	6	1	504
Hourly Exit Rate	232	1704	4	48	0	24	4	2016
Input Volume	230	1719	4	42	1	21	1	2018
% of Volume	101	99	100	114	0	114	400	100

19: 3600 West & 2100 North WB Performance by movement Entire Run

Movement	WBL	WBT	WBR	NBL	NBT	SBT	SBR	All
Denied Delay (hr)	0.0	0.0	0.0	0.0	0.0	0.0	0.0	0.0
Denied Del/Veh (s)	0.0	0.0	0.0	0.0	0.0	0.1	0.1	0.0
Total Delay (hr)	0.0	0.1	0.0	0.5	0.0	0.3	0.0	0.9
Total Del/Veh (s)	0.5	0.2	0.0	40.4	51.5	43.8	13.3	1.5
Vehicles Entered	241	1750	5	41	1	21	2	2061
Vehicles Exited	241	1750	5	42	1	21	2	2062
Hourly Exit Rate	241	1750	5	42	1	21	2	2062
Input Volume	234	1750	4	43	1	21	1	2054
% of Volume	103	100	125	98	100	99	200	100

20: 3600 West & 2100 North EB Performance by movement Interval #1 5:00

Movement	EBL	EBT	EBR	NBT	NBR	SBL	SBT	All
Denied Delay (hr)	0.0	0.0	0.0	0.0	0.0	0.0	0.0	0.0
Denied Del/Veh (s)		0.0	0.0	0.3	1.2	0.0	0.0	0.2
Total Delay (hr)	0.0	0.0	0.0	0.0	0.1	0.0	0.4	0.6
Total Del/Veh (s)		0.4	0.1	13.0	8.9	22.7	24.9	6.3
Vehicles Entered	0	232	1	10	43	3	60	349
Vehicles Exited	0	233	1	10	44	3	60	351
Hourly Exit Rate	0	932	4	40	176	12	240	1404
Input Volume	1	937	10	42	179	13	238	1420
% of Volume	0	99	40	95	98	92	101	99

20: 3600 West & 2100 North EB Performance by movement Interval #2 5:15

Movement	EBL	EBT	EBR	NBT	NBR	SBL	SBT	All
Denied Delay (hr)	0.0	0.0	0.0	0.0	0.0	0.0	0.0	0.0
Denied Del/Veh (s)		0.0	0.0	0.2	0.9	0.0	0.4	0.2
Total Delay (hr)	0.0	0.0	0.0	0.0	0.2	0.0	0.7	1.0
Total Del/Veh (s)		0.4	0.2	13.3	10.4	39.7	38.7	9.1
Vehicles Entered	0	250	3	11	49	3	65	381
Vehicles Exited	0	249	3	11	48	3	64	378
Hourly Exit Rate	0	996	12	44	192	12	256	1512
Input Volume	1	1004	11	45	192	14	255	1522
% of Volume	0	99	109	98	100	86	100	99

20: 3600 West & 2100 North EB Performance by movement Interval #3 5:30

Movement	EBT	EBR	NBT	NBR	SBL	SBT	All
Denied Delay (hr)	0.0	0.0	0.0	0.0	0.0	0.0	0.0
Denied Del/Veh (s)	0.0	0.0	0.3	0.9	0.0	0.0	0.1
Total Delay (hr)	0.0	0.0	0.0	0.1	0.0	0.6	0.8
Total Del/Veh (s)	0.4	0.2	14.9	9.5	26.6	31.9	8.0
Vehicles Entered	234	2	10	44	3	64	357
Vehicles Exited	234	2	10	45	3	64	358
Hourly Exit Rate	936	8	40	180	12	256	1432
Input Volume	937	10	42	179	13	238	1420
% of Volume	100	80	95	101	92	108	101

20: 3600 West & 2100 North EB Performance by movement Interval #4 5:45

Movement	EBL	EBT	EBR	NBT	NBR	SBL	SBT	All
Denied Delay (hr)	0.0	0.0	0.0	0.0	0.0	0.0	0.0	0.0
Denied Del/Veh (s)		0.0	0.0	0.3	1.0	0.0	0.0	0.1
Total Delay (hr)	0.0	0.0	0.0	0.0	0.1	0.0	0.5	0.8
Total Del/Veh (s)		0.4	0.1	14.3	9.4	27.4	29.7	7.4
Vehicles Entered	0	237	3	11	45	3	61	360
Vehicles Exited	0	237	3	11	44	3	62	360
Hourly Exit Rate	0	948	12	44	176	12	248	1440
Input Volume	1	937	10	42	179	13	238	1420
% of Volume	0	101	120	105	98	92	104	101

20: 3600 West & 2100 North EB Performance by movement Entire Run

Movement	EBL	EBT	EBR	NBT	NBR	SBL	SBT	All
Denied Delay (hr)	0.0	0.0	0.0	0.0	0.0	0.0	0.0	0.1
Denied Del/Veh (s)		0.0	0.0	0.3	1.0	0.0	0.1	0.1
Total Delay (hr)	0.0	0.1	0.0	0.2	0.5	0.1	2.3	3.2
Total Del/Veh (s)		0.4	0.1	14.6	10.0	29.1	32.6	7.8
Vehicles Entered	0	953	9	42	181	12	250	1447
Vehicles Exited	0	954	9	42	181	12	250	1448
Hourly Exit Rate	0	954	9	42	181	12	250	1448
Input Volume	1	954	10	43	182	13	242	1446
% of Volume	0	100	88	98	99	91	103	100

22: 2100 North WB Performance by movement Interval #1 5:00

Movement	WBL	WBT	All
Denied Delay (hr)	0.0	0.1	0.1
Denied Del/Veh (s)	2.0	0.6	0.6
Total Delay (hr)	0.0	0.4	0.4
Total Del/Veh (s)	1.5	2.5	2.5
Vehicles Entered	1	494	495
Vehicles Exited	2	492	494
Hourly Exit Rate	8	1968	1976
Input Volume	6	1953	1959
% of Volume	133	101	101

22: 2100 North WB Performance by movement Interval #2 5:15

Movement	WBL	WBT	All
Denied Delay (hr)	0.0	0.1	0.1
Denied Del/Veh (s)	2.0	0.7	0.7
Total Delay (hr)	0.0	0.4	0.4
Total Del/Veh (s)	2.5	3.0	3.0
Vehicles Entered	1	526	527
Vehicles Exited	1	526	527
Hourly Exit Rate	4	2104	2108
Input Volume	6	2093	2099
% of Volume	67	101	100

22: 2100 North WB Performance by movement Interval #3 5:30

Movement	WBL	WBT	All
Denied Delay (hr)	0.0	0.1	0.1
Denied Del/Veh (s)	1.1	0.6	0.6
Total Delay (hr)	0.0	0.4	0.4
Total Del/Veh (s)	1.1	2.8	2.8
Vehicles Entered	2	490	492
Vehicles Exited	1	491	492
Hourly Exit Rate	4	1964	1968
Input Volume	6	1953	1959
% of Volume	67	101	100

22: 2100 North WB Performance by movement Interval #4 5:45

Movement	WBL	WBT	All
Denied Delay (hr)	0.0	0.1	0.1
Denied Del/Veh (s)	1.7	0.7	0.7
Total Delay (hr)	0.0	0.4	0.4
Total Del/Veh (s)	1.0	2.6	2.6
Vehicles Entered	2	486	488
Vehicles Exited	2	486	488
Hourly Exit Rate	8	1944	1952
Input Volume	6	1953	1959
% of Volume	133	100	100

22: 2100 North WB Performance by movement Entire Run

Movement	WBL	WBT	All
Denied Delay (hr)	0.0	0.4	0.4
Denied Del/Veh (s)	1.9	0.7	0.7
Total Delay (hr)	0.0	1.6	1.6
Total Del/Veh (s)	1.6	2.8	2.8
Vehicles Entered	5	1995	2000
Vehicles Exited	6	1996	2002
Hourly Exit Rate	6	1996	2002
Input Volume	6	1988	1994
% of Volume	100	100	100

23: 2100 North EB Performance by movement Interval #1 5:00

Movement	EBT	SEL	All
Denied Delay (hr)	0.0	0.0	0.0
Denied Del/Veh (s)	0.0	0.0	0.0
Total Delay (hr)	0.0	0.0	0.0
Total Del/Veh (s)	0.3	6.0	0.3
Vehicles Entered	281	2	283
Vehicles Exited	281	2	283
Hourly Exit Rate	1124	8	1132
Input Volume	1129	6	1135
% of Volume	100	133	100

23: 2100 North EB Performance by movement Interval #2 5:15

Movement	EBT	SEL	All
Denied Delay (hr)	0.0	0.0	0.0
Denied Del/Veh (s)	0.0	0.0	0.0
Total Delay (hr)	0.0	0.0	0.0
Total Del/Veh (s)	0.3	5.9	0.3
Vehicles Entered	300	1	301
Vehicles Exited	300	1	301
Hourly Exit Rate	1200	4	1204
Input Volume	1210	6	1216
% of Volume	99	67	99

23: 2100 North EB Performance by movement Interval #3 5:30

Movement	EBT	SEL	All
Denied Delay (hr)	0.0	0.0	0.0
Denied Del/Veh (s)	0.0	0.0	0.0
Total Delay (hr)	0.0	0.0	0.0
Total Del/Veh (s)	0.3	5.5	0.3
Vehicles Entered	282	1	283
Vehicles Exited	282	1	283
Hourly Exit Rate	1128	4	1132
Input Volume	1129	6	1135
% of Volume	100	67	100

23: 2100 North EB Performance by movement Interval #4 5:45

Movement	EBT	SEL	All
Denied Delay (hr)	0.0	0.0	0.0
Denied Del/Veh (s)	0.0	0.0	0.0
Total Delay (hr)	0.0	0.0	0.0
Total Del/Veh (s)	0.3	6.2	0.3
Vehicles Entered	284	2	286
Vehicles Exited	284	2	286
Hourly Exit Rate	1136	8	1144
Input Volume	1129	6	1135
% of Volume	101	133	101

23: 2100 North EB Performance by movement Entire Run

Movement	EBT	SEL	All
Denied Delay (hr)	0.0	0.0	0.0
Denied Del/Veh (s)	0.0	0.0	0.0
Total Delay (hr)	0.1	0.0	0.1
Total Del/Veh (s)	0.3	6.0	0.3
Vehicles Entered	1147	6	1153
Vehicles Exited	1147	6	1153
Hourly Exit Rate	1147	6	1153
Input Volume	1149	6	1155
% of Volume	100	100	100

24: 2100 North EB Performance by movement Interval #1 5:00

Movement	EBL	EBT	All
Denied Delay (hr)	0.0	0.0	0.0
Denied Del/Veh (s)		0.2	0.2
Total Delay (hr)	0.0	0.1	0.1
Total Del/Veh (s)		1.4	1.4
Vehicles Entered	0	232	232
Vehicles Exited	0	234	234
Hourly Exit Rate	0	936	936
Input Volume	1	948	949
% of Volume	0	99	99

24: 2100 North EB Performance by movement Interval #2 5:15

Movement	EBL	EBT	All
Denied Delay (hr)	0.0	0.0	0.0
Denied Del/Veh (s)		0.2	0.2
Total Delay (hr)	0.0	0.1	0.1
Total Del/Veh (s)		1.5	1.5
Vehicles Entered	0	254	254
Vehicles Exited	0	253	253
Hourly Exit Rate	0	1012	1012
Input Volume	1	1016	1017
% of Volume	0	100	100

24: 2100 North EB Performance by movement Interval #3 5:30

Movement	EBT	All
Denied Delay (hr)	0.0	0.0
Denied Del/Veh (s)	0.2	0.2
Total Delay (hr)	0.1	0.1
Total Del/Veh (s)	1.4	1.4
Vehicles Entered	236	236
Vehicles Exited	237	237
Hourly Exit Rate	948	948
Input Volume	948	949
% of Volume	100	100

24: 2100 North EB Performance by movement Interval #4 5:45

Movement	EBL	EBT	All
Denied Delay (hr)	0.0	0.0	0.0
Denied Del/Veh (s)		0.2	0.2
Total Delay (hr)	0.0	0.1	0.1
Total Del/Veh (s)		1.5	1.5
Vehicles Entered	0	240	240
Vehicles Exited	0	239	239
Hourly Exit Rate	0	956	956
Input Volume	1	948	949
% of Volume	0	101	101

24: 2100 North EB Performance by movement Entire Run

Movement	EBL	EBT	All
Denied Delay (hr)	0.0	0.0	0.0
Denied Del/Veh (s)	2.2	0.2	0.2
Total Delay (hr)	0.0	0.4	0.4
Total Del/Veh (s)	0.6	1.5	1.5
Vehicles Entered	1	962	963
Vehicles Exited	1	963	964
Hourly Exit Rate	1	963	964
Input Volume	1	965	966
% of Volume	100	100	100

25: 2100 North WB Performance by movement Interval #1 5:00

Movement	WBT	NWL	All
Denied Delay (hr)	0.0	0.0	0.0
Denied Del/Veh (s)	0.0		0.0
Total Delay (hr)	0.0	0.0	0.0
Total Del/Veh (s)	0.2		0.2
Vehicles Entered	443	0	443
Vehicles Exited	443	0	443
Hourly Exit Rate	1772	0	1772
Input Volume	1763	1	1764
% of Volume	101	0	100

25: 2100 North WB Performance by movement Interval #2 5:15

Movement	WBT	NWL	All
Denied Delay (hr)	0.0	0.0	0.0
Denied Del/Veh (s)	0.0		0.0
Total Delay (hr)	0.0	0.0	0.0
Total Del/Veh (s)	0.2		0.2
Vehicles Entered	474	0	474
Vehicles Exited	474	0	474
Hourly Exit Rate	1896	0	1896
Input Volume	1888	1	1889
% of Volume	100	0	100

25: 2100 North WB Performance by movement Interval #3 5:30

Movement	WBT	All
Denied Delay (hr)	0.0	0.0
Denied Del/Veh (s)	0.0	0.0
Total Delay (hr)	0.0	0.0
Total Del/Veh (s)	0.2	0.2
Vehicles Entered	439	439
Vehicles Exited	439	439
Hourly Exit Rate	1756	1756
Input Volume	1763	1764
% of Volume	100	100

25: 2100 North WB Performance by movement Interval #4 5:45

Movement	WBT	NWL	All
Denied Delay (hr)	0.0	0.0	0.0
Denied Del/Veh (s)	0.0		0.0
Total Delay (hr)	0.0	0.0	0.0
Total Del/Veh (s)	0.2		0.2
Vehicles Entered	439	0	439
Vehicles Exited	439	0	439
Hourly Exit Rate	1756	0	1756
Input Volume	1763	1	1764
% of Volume	100	0	100

25: 2100 North WB Performance by movement Entire Run

Movement	WBT	NWL	All
Denied Delay (hr)	0.0	0.0	0.0
Denied Del/Veh (s)	0.0	0.0	0.0
Total Delay (hr)	0.1	0.0	0.1
Total Del/Veh (s)	0.2	12.4	0.2
Vehicles Entered	1794	1	1795
Vehicles Exited	1794	1	1795
Hourly Exit Rate	1794	1	1795
Input Volume	1794	1	1795
% of Volume	100	100	100

31: 400 East & Crossroads Blvd Performance by movement Interval #1 5:00

Movement	EBL	EBT	EBR	WBL	WBT	WBR	NBL	NBT	NBR	SBL	SBT	SBR
Denied Delay (hr)	0.0	0.0	0.0	0.0	0.0	0.0	0.0	0.0	0.0	0.0	0.0	0.0
Denied Del/Veh (s)	0.0	0.0	0.0	0.5	0.6	1.7	0.3	0.1	0.1	0.2	0.1	0.2
Total Delay (hr)	0.0	0.1	0.0	0.0	0.1	0.0	0.0	0.0	0.0	0.1	0.0	0.1
Total Del/Veh (s)	5.8	2.6	0.7	7.4	2.9	1.9	37.5	13.5	6.1	23.3	21.3	12.7
Vehicles Entered	7	146	3	7	163	11	1	1	4	10	4	15
Vehicles Exited	7	145	3	6	164	11	1	1	4	10	3	14
Hourly Exit Rate	28	580	12	24	656	44	4	4	16	40	12	56
Input Volume	35	582	10	30	675	44	8	3	16	37	14	52
% of Volume	80	100	120	80	97	100	50	133	100	108	86	108

31: 400 East & Crossroads Blvd Performance by movement Interval #1 5:00

Movement	All
Denied Delay (hr)	0.0
Denied Del/Veh (s)	0.4
Total Delay (hr)	0.4
Total Del/Veh (s)	4.2
Vehicles Entered	372
Vehicles Exited	369
Hourly Exit Rate	1476
Input Volume	1506
% of Volume	98

31: 400 East & Crossroads Blvd Performance by movement Interval #2 5:15

Movement	EBL	EBT	EBR	WBL	WBT	WBR	NBL	NBT	NBR	SBL	SBT	SBR
Denied Delay (hr)	0.0	0.0	0.0	0.0	0.0	0.0	0.0	0.0	0.0	0.0	0.0	0.0
Denied Del/Veh (s)	0.0	0.0	0.0	0.8	0.7	1.9	0.1	0.1	0.1	0.1	0.2	0.1
Total Delay (hr)	0.0	0.2	0.0	0.0	0.2	0.0	0.0	0.0	0.0	0.1	0.0	0.1
Total Del/Veh (s)	7.5	3.9	0.9	7.3	3.5	2.0	15.1	15.7	8.1	33.4	42.5	19.5
Vehicles Entered	11	144	2	8	180	14	2	1	5	11	4	13
Vehicles Exited	11	146	2	8	180	14	2	1	5	10	4	14
Hourly Exit Rate	44	584	8	32	720	56	8	4	20	40	16	56
Input Volume	38	623	11	33	723	47	8	3	17	40	15	56
% of Volume	116	94	73	97	100	119	100	133	118	100	107	100

31: 400 East & Crossroads Blvd Performance by movement Interval #2 5:15

Movement	All
Denied Delay (hr)	0.0
Denied Del/Veh (s)	0.4
Total Delay (hr)	0.6
Total Del/Veh (s)	5.7
Vehicles Entered	395
Vehicles Exited	397
Hourly Exit Rate	1588
Input Volume	1614
% of Volume	98

31: 400 East & Crossroads Blvd Performance by movement Interval #3 5:30

Movement	EBL	EBT	EBR	WBL	WBT	WBR	NBL	NBT	NBR	SBL	SBT	SBR
Denied Delay (hr)	0.0	0.0	0.0	0.0	0.0	0.0	0.0	0.0	0.0	0.0	0.0	0.0
Denied Del/Veh (s)	0.0	0.0	0.0	0.7	0.7	2.0	0.1	0.1	0.1	0.2	0.1	0.2
Total Delay (hr)	0.0	0.1	0.0	0.0	0.1	0.0	0.0	0.0	0.0	0.1	0.0	0.1
Total Del/Veh (s)	6.5	2.7	1.0	7.4	3.2	1.6	20.5	22.9	8.8	31.2	31.0	21.3
Vehicles Entered	8	148	3	6	161	12	2	1	5	11	4	14
Vehicles Exited	8	148	3	5	162	13	2	1	5	11	4	13
Hourly Exit Rate	32	592	12	20	648	52	8	4	20	44	16	52
Input Volume	35	582	10	30	675	44	8	3	16	37	14	52
% of Volume	91	102	120	67	96	118	100	133	125	119	114	100

31: 400 East & Crossroads Blvd Performance by movement Interval #3 5:30

Movement	All
Denied Delay (hr)	0.0
Denied Del/Veh (s)	0.4
Total Delay (hr)	0.6
Total Del/Veh (s)	5.2
Vehicles Entered	375
Vehicles Exited	375
Hourly Exit Rate	1500
Input Volume	1506
% of Volume	100

31: 400 East & Crossroads Blvd Performance by movement Interval #4 5:45

Movement	EBL	EBT	EBR	WBL	WBT	WBR	NBL	NBT	NBR	SBL	SBT	SBR
Denied Delay (hr)	0.0	0.0	0.0	0.0	0.0	0.0	0.0	0.0	0.0	0.0	0.0	0.0
Denied Del/Veh (s)	0.0	0.0	0.0	0.7	0.6	1.7	0.2	0.1	0.1	0.1	0.2	0.2
Total Delay (hr)	0.0	0.1	0.0	0.0	0.1	0.0	0.0	0.0	0.0	0.1	0.0	0.1
Total Del/Veh (s)	6.4	2.3	0.8	6.4	3.0	1.8	20.5	18.9	6.8	21.6	21.2	11.8
Vehicles Entered	7	143	2	8	169	12	2	1	4	8	3	15
Vehicles Exited	7	137	2	8	168	12	2	1	5	9	3	15
Hourly Exit Rate	28	548	8	32	672	48	8	4	20	36	12	60
Input Volume	35	582	10	30	675	44	8	3	16	37	14	52
% of Volume	80	94	80	107	100	109	100	133	125	97	86	115

31: 400 East & Crossroads Blvd Performance by movement Interval #4 5:45

Movement	All
Denied Delay (hr)	0.0
Denied Del/Veh (s)	0.3
Total Delay (hr)	0.4
Total Del/Veh (s)	4.0
Vehicles Entered	374
Vehicles Exited	369
Hourly Exit Rate	1476
Input Volume	1506
% of Volume	98

31: 400 East & Crossroads Blvd Performance by movement Entire Run

Movement	EBL	EBT	EBR	WBL	WBT	WBR	NBL	NBT	NBR	SBL	SBT	SBR
Denied Delay (hr)	0.0	0.0	0.0	0.0	0.1	0.0	0.0	0.0	0.0	0.0	0.0	0.0
Denied Del/Veh (s)	0.0	0.0	0.0	0.7	0.6	1.8	0.1	0.1	0.1	0.2	0.1	0.2
Total Delay (hr)	0.1	0.5	0.0	0.1	0.6	0.0	0.0	0.0	0.0	0.3	0.1	0.3
Total Del/Veh (s)	6.6	2.9	0.9	7.4	3.2	1.9	21.4	23.7	7.5	29.7	31.6	17.0
Vehicles Entered	33	580	10	28	673	49	7	3	18	40	14	57
Vehicles Exited	33	577	10	28	673	50	7	3	19	40	14	56
Hourly Exit Rate	33	577	10	28	673	50	7	3	19	40	14	56
Input Volume	36	592	10	31	687	45	8	3	16	38	14	53
% of Volume	92	97	98	91	98	112	88	100	117	106	98	106

31: 400 East & Crossroads Blvd Performance by movement Entire Run

Movement	All
Denied Delay (hr)	0.2
Denied Del/Veh (s)	0.4
Total Delay (hr)	2.1
Total Del/Veh (s)	4.9
Vehicles Entered	1512
Vehicles Exited	1510
Hourly Exit Rate	1510
Input Volume	1533
% of Volume	98

34: Crossroads Blvd Performance by movement Interval #1 5:00

Movement	EBT	EBR	WBT	NBR	All
Denied Delay (hr)	0.0	0.0	0.0	0.0	0.0
Denied Del/Veh (s)	0.0	0.0	0.0		0.0
Total Delay (hr)	0.2	0.0	0.0	0.0	0.2
Total Del/Veh (s)	4.7	1.1	0.3		2.3
Vehicles Entered	158	7	180	0	345
Vehicles Exited	154	6	180	0	340
Hourly Exit Rate	616	24	720	0	1360
Input Volume	626	20	735	1	1382
% of Volume	98	120	98	0	98

34: Crossroads Blvd Performance by movement Interval #2 5:15

Movement	EBT	EBR	WBT	All
Denied Delay (hr)	0.0	0.0	0.0	0.0
Denied Del/Veh (s)	0.0	0.0	0.0	0.0
Total Delay (hr)	0.2	0.0	0.0	0.2
Total Del/Veh (s)	5.1	0.9	0.3	2.4
Vehicles Entered	152	6	195	353
Vehicles Exited	156	6	195	357
Hourly Exit Rate	624	24	780	1428
Input Volume	673	21	788	1483
% of Volume	93	114	99	96

34: Crossroads Blvd Performance by movement Interval #3 5:30

Movement	EBT	EBR	WBT	NBR	All
Denied Delay (hr)	0.0	0.0	0.0	0.0	0.0
Denied Del/Veh (s)	0.0	0.0	0.0		0.0
Total Delay (hr)	0.2	0.0	0.0	0.0	0.2
Total Del/Veh (s)	4.7	1.1	0.2		2.3
Vehicles Entered	153	5	177	0	335
Vehicles Exited	155	5	177	0	337
Hourly Exit Rate	620	20	708	0	1348
Input Volume	626	20	735	1	1382
% of Volume	99	100	96	0	98

34: Crossroads Blvd Performance by movement Interval #4 5:45

Movement	EBT	EBR	WBT	NBR	All
Denied Delay (hr)	0.0	0.0	0.0	0.0	0.0
Denied Del/Veh (s)	0.0	0.0	0.0		0.0
Total Delay (hr)	0.2	0.0	0.0	0.0	0.2
Total Del/Veh (s)	4.8	0.9	0.3		2.3
Vehicles Entered	150	5	185	0	340
Vehicles Exited	152	5	185	0	342
Hourly Exit Rate	608	20	740	0	1368
Input Volume	626	20	735	1	1382
% of Volume	97	100	101	0	99

34: Crossroads Blvd Performance by movement Entire Run

Movement	EBT	EBR	WBT	NBR	All
Denied Delay (hr)	0.0	0.0	0.0	0.0	0.0
Denied Del/Veh (s)	0.0	0.0	0.0	0.1	0.0
Total Delay (hr)	0.9	0.0	0.1	0.0	0.9
Total Del/Veh (s)	5.0	1.1	0.3	2.4	2.4
Vehicles Entered	614	22	737	1	1374
Vehicles Exited	618	22	737	1	1378
Hourly Exit Rate	618	22	737	1	1378
Input Volume	638	20	748	1	1407
% of Volume	97	109	98	100	98

38: Performance by movement Interval #1 5:00

Movement	EBL	EBR	NBL	NBT	SBT	SBR	All
Denied Delay (hr)	0.0	0.0	0.0	0.0	0.1	0.0	0.1
Denied Del/Veh (s)	0.2	0.2	0.0	0.0	0.5	1.4	0.3
Total Delay (hr)	2.1	1.5	1.2	0.5	2.3	0.0	7.6
Total Del/Veh (s)	364.7	131.0	131.3	4.8	12.5	6.6	23.6
Vehicles Entered	17	36	28	373	638	25	1117
Vehicles Exited	7	31	22	368	639	25	1092
Hourly Exit Rate	28	124	88	1472	2556	100	4368
Input Volume	74	157	118	1545	2549	98	4541
% of Volume	38	79	75	95	100	102	96

38: Performance by movement Interval #2 5:15

Movement	EBL	EBR	NBL	NBT	SBT	SBR	All
Denied Delay (hr)	0.0	0.0	0.0	0.0	0.1	0.0	0.1
Denied Del/Veh (s)	0.3	0.2	0.0	0.0	0.5	1.4	0.3
Total Delay (hr)	4.9	3.2	2.1	0.7	4.1	0.1	15.1
Total Del/Veh (s)	533.2	213.9	196.4	6.5	20.4	12.0	42.2
Vehicles Entered	19	45	30	400	693	30	1217
Vehicles Exited	9	34	27	392	673	29	1164
Hourly Exit Rate	36	136	108	1568	2692	116	4656
Input Volume	79	168	126	1656	2732	105	4866
% of Volume	46	81	86	95	99	110	96

38: Performance by movement Interval #3 5:30

Movement	EBL	EBR	NBL	NBT	SBT	SBR	All
Denied Delay (hr)	0.0	0.1	0.0	0.0	0.1	0.0	0.2
Denied Del/Veh (s)	6.7	5.7	0.0	0.0	0.4	1.4	0.6
Total Delay (hr)	7.9	5.6	3.4	0.7	2.8	0.1	20.4
Total Del/Veh (s)	616.3	345.0	298.1	6.4	14.8	8.2	58.2
Vehicles Entered	21	38	30	395	629	24	1137
Vehicles Exited	6	34	26	407	645	25	1143
Hourly Exit Rate	24	136	104	1628	2580	100	4572
Input Volume	74	157	118	1545	2549	98	4541
% of Volume	32	87	88	105	101	102	101

38: Performance by movement Interval #4 5:45

Movement	EBL	EBR	NBL	NBT	SBT	SBR	All
Denied Delay (hr)	1.0	2.2	0.0	0.0	0.1	0.0	3.3
Denied Del/Veh (s)	181.9	198.9	0.0	0.0	0.4	1.3	10.3
Total Delay (hr)	10.4	4.4	4.4	1.0	3.1	0.1	23.3
Total Del/Veh (s)	723.5	340.5	334.9	8.8	16.6	9.7	67.8
Vehicles Entered	13	22	31	387	638	24	1115
Vehicles Exited	9	34	29	389	626	24	1111
Hourly Exit Rate	36	136	116	1556	2504	96	4444
Input Volume	74	157	118	1545	2549	98	4541
% of Volume	49	87	98	101	98	98	98

38: Performance by movement Entire Run

Movement	EBL	EBR	NBL	NBT	SBT	SBR	All
Denied Delay (hr)	1.0	2.3	0.0	0.0	0.3	0.0	3.7
Denied Del/Veh (s)	47.5	51.6	0.0	0.0	0.5	1.4	2.9
Total Delay (hr)	25.3	14.6	11.1	3.0	12.2	0.3	66.5
Total Del/Veh (s)	1232.8	360.2	326.4	6.8	16.7	9.6	51.6
Vehicles Entered	70	141	118	1554	2599	102	4584
Vehicles Exited	30	134	104	1556	2583	103	4510
Hourly Exit Rate	30	134	104	1556	2583	103	4510
Input Volume	75	160	120	1573	2595	100	4622
% of Volume	40	84	87	99	100	103	98

Total Network Performance By Interval

Interval Start	5:00	5:15	5:30	5:45	All
Denied Delay (hr)	0.8	1.0	1.4	4.2	7.4
Denied Del/Veh (s)	1.2	1.3	2.0	5.9	2.6
Total Delay (hr)	44.2	62.0	68.4	68.5	243.1
Total Del/Veh (s)	54.2	69.5	79.6	80.6	81.5
Vehicles Entered	2533	2748	2530	2524	10337
Vehicles Exited	2471	2650	2562	2522	10204
Hourly Exit Rate	9884	10600	10248	10088	10204
Input Volume	47850	51258	47850	47850	48702
% of Volume	21	21	21	21	21

Intersection: 2: Redwood Road & Crossroads Blvd, Interval #1

Movement	EB	EB	EB	EB	EB	EB	WB	WB	WB	WB	WB	WB
Directions Served	L	L	T	T	T	R	L	L	T	T	T	R
Maximum Queue (ft)	192	223	140	121	30	40	112	134	132	138	125	112
Average Queue (ft)	135	167	90	45	9	12	65	86	95	97	71	61
95th Queue (ft)	209	239	150	110	32	38	117	145	134	145	130	121
Link Distance (ft)			1586	1586					901	901		
Upstream Blk Time (%)												
Queuing Penalty (veh)												
Storage Bay Dist (ft)	700	700			500	500	220	220			340	340
Storage Blk Time (%)								0				
Queuing Penalty (veh)								0				

Intersection: 2: Redwood Road & Crossroads Blvd, Interval #1

Movement	NB	NB	NB	NB	NB	SB	SB	SB	SB	SB
Directions Served	L	L	T	T	R	L	L	T	T	R
Maximum Queue (ft)	150	182	319	310	41	195	220	357	367	149
Average Queue (ft)	93	138	233	216	24	129	111	252	271	81
95th Queue (ft)	174	198	334	323	45	212	235	442	453	164
Link Distance (ft)			1242	1242				1013	1013	1013
Upstream Blk Time (%)										
Queuing Penalty (veh)										
Storage Bay Dist (ft)	200	200			300	450	450			
Storage Blk Time (%)		0	14	1				1		
Queuing Penalty (veh)		1	32	1				3		

Intersection: 2: Redwood Road & Crossroads Blvd, Interval #2

Movement	EB	EB	EB	EB	EB	EB	WB	WB	WB	WB	WB	WB
Directions Served	L	L	T	T	T	R	L	L	T	T	T	R
Maximum Queue (ft)	212	243	136	113	21	43	107	122	139	139	134	136
Average Queue (ft)	162	189	90	43	7	13	69	86	91	94	72	68
95th Queue (ft)	232	259	140	103	23	41	119	130	140	143	138	141
Link Distance (ft)			1586	1586					901	901		
Upstream Blk Time (%)												
Queuing Penalty (veh)												
Storage Bay Dist (ft)	700	700			500	500	220	220			340	340
Storage Blk Time (%)												
Queuing Penalty (veh)												

Intersection: 2: Redwood Road & Crossroads Blvd, Interval #2

Movement	NB	NB	NB	NB	NB	SB	SB	SB	SB	SB
Directions Served	L	L	T	T	R	L	L	T	T	R
Maximum Queue (ft)	163	255	360	336	44	202	182	436	441	183
Average Queue (ft)	96	154	252	241	23	136	111	268	283	96
95th Queue (ft)	184	287	385	364	43	214	196	463	470	193
Link Distance (ft)			1242	1242				1013	1013	1013
Upstream Blk Time (%)										
Queuing Penalty (veh)										
Storage Bay Dist (ft)	200	200			300	450	450			
Storage Blk Time (%)	0	1	18	3				1		
Queuing Penalty (veh)	0	4	47	4				4		

Intersection: 2: Redwood Road & Crossroads Blvd, Interval #3

Movement	EB	EB	EB	EB	EB	EB	WB	WB	WB	WB	WB	WB
Directions Served	L	L	T	T	T	R	L	L	T	T	T	R
Maximum Queue (ft)	196	208	126	93	24	34	122	141	143	143	123	106
Average Queue (ft)	138	160	87	39	7	11	73	90	95	102	77	57
95th Queue (ft)	208	228	139	101	27	35	130	148	145	147	138	107
Link Distance (ft)			1586	1586					901	901		
Upstream Blk Time (%)												
Queuing Penalty (veh)												
Storage Bay Dist (ft)	700	700			500	500	220	220			340	340
Storage Blk Time (%)									0			
Queuing Penalty (veh)									0			

Intersection: 2: Redwood Road & Crossroads Blvd, Interval #3

Movement	NB	NB	NB	NB	NB	SB	SB	SB	SB	SB
Directions Served	L	L	T	T	R	L	L	T	T	R
Maximum Queue (ft)	159	203	285	284	40	190	249	460	460	169
Average Queue (ft)	94	140	216	203	22	130	144	291	306	80
95th Queue (ft)	181	219	301	294	44	198	361	554	564	175
Link Distance (ft)			1242	1242				1013	1013	1013
Upstream Blk Time (%)										
Queuing Penalty (veh)										
Storage Bay Dist (ft)	200	200			300	450	450			
Storage Blk Time (%)	0	2	12	1				3		
Queuing Penalty (veh)	0	7	28	1				9		

Intersection: 2: Redwood Road & Crossroads Blvd, Interval #4

Movement	EB	EB	EB	EB	EB	EB	WB	WB	WB	WB	WB	WB
Directions Served	L	L	T	T	T	R	L	L	T	T	T	R
Maximum Queue (ft)	194	232	127	107	25	30	112	124	121	130	127	104
Average Queue (ft)	145	169	84	44	5	11	78	91	88	95	79	60
95th Queue (ft)	217	243	133	103	20	36	121	134	127	141	138	103
Link Distance (ft)			1586	1586					901	901		
Upstream Blk Time (%)												
Queuing Penalty (veh)												
Storage Bay Dist (ft)	700	700			500	500	220	220			340	340
Storage Blk Time (%)												
Queuing Penalty (veh)												

Intersection: 2: Redwood Road & Crossroads Blvd, Interval #4

Movement	NB	NB	NB	NB	NB	SB	SB	SB	SB	SB
Directions Served	L	L	T	T	R	L	L	T	T	R
Maximum Queue (ft)	150	236	314	302	40	171	160	452	473	158
Average Queue (ft)	78	141	221	212	22	124	104	269	295	80
95th Queue (ft)	166	237	332	334	42	181	168	500	516	152
Link Distance (ft)			1242	1242				1013	1013	1013
Upstream Blk Time (%)										
Queuing Penalty (veh)										
Storage Bay Dist (ft)	200	200			300	450	450			
Storage Blk Time (%)	0	1	13	2				1		
Queuing Penalty (veh)	0	4	30	2				5		

Intersection: 2: Redwood Road & Crossroads Blvd, All Intervals

Movement	EB	EB	EB	EB	EB	EB	WB	WB	WB	WB	WB	WB
Directions Served	L	L	T	T	T	R	L	L	T	T	T	R
Maximum Queue (ft)	238	270	150	135	36	61	137	160	157	160	156	157
Average Queue (ft)	145	171	88	43	7	12	71	88	92	97	75	62
95th Queue (ft)	219	245	141	105	26	38	123	140	137	144	136	119
Link Distance (ft)			1586	1586					901	901		
Upstream Blk Time (%)												
Queuing Penalty (veh)												
Storage Bay Dist (ft)	700	700			500	500	220	220			340	340
Storage Blk Time (%)								0	0			
Queuing Penalty (veh)								0	0			

Intersection: 2: Redwood Road & Crossroads Blvd, All Intervals

Movement	NB	NB	NB	NB	NB	SB	SB	SB	SB	SB
Directions Served	L	L	T	T	R	L	L	T	T	R
Maximum Queue (ft)	182	295	385	371	52	223	291	547	551	226
Average Queue (ft)	90	143	230	218	23	130	118	270	289	84
95th Queue (ft)	177	239	342	332	44	202	256	493	504	172
Link Distance (ft)			1242	1242				1013	1013	1013
Upstream Blk Time (%)										
Queuing Penalty (veh)										
Storage Bay Dist (ft)	200	200			300	450	450			
Storage Blk Time (%)	0	1	14	2				2		
Queuing Penalty (veh)	0	4	34	2				5		

Intersection: 3: Redwood Road & Commerce Drive, Interval #1

Movement	EB	EB	EB	WB	WB	WB	NB	NB	NB	NB	SB	SB
Directions Served	L	T	R	L	T	R	L	T	T	R	L	T
Maximum Queue (ft)	177	72	76	59	66	71	135	468	419	11	195	427
Average Queue (ft)	119	38	46	23	30	37	52	294	303	3	99	299
95th Queue (ft)	181	76	86	62	71	74	153	491	438	14	195	488
Link Distance (ft)		1102			583			1013	1013			503
Upstream Blk Time (%)								0				0
Queuing Penalty (veh)								0				5
Storage Bay Dist (ft)	110		150	105		105	250			250	300	
Storage Blk Time (%)	19	0		0	0	0		10	13			8
Queuing Penalty (veh)	24	0		0	0	0		8	3			10

Intersection: 3: Redwood Road & Commerce Drive, Interval #1

Movement	SB	SB
Directions Served	T	R
Maximum Queue (ft)	466	250
Average Queue (ft)	338	162
95th Queue (ft)	527	336
Link Distance (ft)	503	
Upstream Blk Time (%)	1	
Queuing Penalty (veh)	11	
Storage Bay Dist (ft)		150
Storage Blk Time (%)	22	0
Queuing Penalty (veh)	81	0

Intersection: 3: Redwood Road & Commerce Drive, Interval #2

Movement	EB	EB	EB	WB	WB	WB	NB	NB	NB	NB	SB	SB
Directions Served	L	T	R	L	T	R	L	T	T	R	L	T
Maximum Queue (ft)	173	180	105	65	72	66	273	455	458	130	348	504
Average Queue (ft)	111	56	49	22	34	32	83	329	342	22	125	385
95th Queue (ft)	179	173	104	61	81	65	240	474	474	151	314	557
Link Distance (ft)		1102			583			1013	1013			503
Upstream Blk Time (%)												2
Queuing Penalty (veh)												30
Storage Bay Dist (ft)	110		150	105		105	250			250	300	
Storage Blk Time (%)	21	0			0	0		14	17			16
Queuing Penalty (veh)	29	1			0	0		12	4			21

Intersection: 3: Redwood Road & Commerce Drive, Interval #2

Movement	SB	SB
Directions Served	T	R
Maximum Queue (ft)	518	250
Average Queue (ft)	415	189
95th Queue (ft)	587	346
Link Distance (ft)	503	
Upstream Blk Time (%)	5	
Queuing Penalty (veh)	61	
Storage Bay Dist (ft)		150
Storage Blk Time (%)	26	0
Queuing Penalty (veh)	104	4

Intersection: 3: Redwood Road & Commerce Drive, Interval #3

Movement	EB	EB	EB	WB	WB	WB	NB	NB	NB	NB	SB	SB
Directions Served	L	T	R	L	T	R	L	T	T	R	L	T
Maximum Queue (ft)	185	170	123	50	71	77	138	403	403	16	436	521
Average Queue (ft)	116	52	58	20	28	37	47	298	311	4	197	450
95th Queue (ft)	196	169	124	54	76	82	128	430	436	15	469	617
Link Distance (ft)		1102			583			1013	1013			503
Upstream Blk Time (%)												7
Queuing Penalty (veh)												84
Storage Bay Dist (ft)	110		150	105		105	250			250	300	
Storage Blk Time (%)	22	0	0		0	1		11	14		0	21
Queuing Penalty (veh)	28	1	0		0	1		9	3		2	27

Intersection: 3: Redwood Road & Commerce Drive, Interval #3

Movement	SB	SB
Directions Served	T	R
Maximum Queue (ft)	534	250
Average Queue (ft)	471	202
95th Queue (ft)	627	338
Link Distance (ft)	503	
Upstream Blk Time (%)	10	
Queuing Penalty (veh)	127	
Storage Bay Dist (ft)		150
Storage Blk Time (%)	28	1
Queuing Penalty (veh)	103	6

Intersection: 3: Redwood Road & Commerce Drive, Interval #4

Movement	EB	EB	EB	WB	WB	WB	NB	NB	NB	NB	SB	SB
Directions Served	L	T	R	L	T	R	L	T	T	R	L	T
Maximum Queue (ft)	177	164	109	45	54	66	217	413	426	50	375	493
Average Queue (ft)	115	47	45	18	19	33	77	303	309	9	169	395
95th Queue (ft)	180	134	100	49	54	72	228	446	458	84	405	605
Link Distance (ft)		1102			583			1013	1013			503
Upstream Blk Time (%)												3
Queuing Penalty (veh)												43
Storage Bay Dist (ft)	110		150	105		105	250			250	300	
Storage Blk Time (%)	19	1	0		1	1		10	12			15
Queuing Penalty (veh)	24	2	0		0	0		8	3			19

Intersection: 3: Redwood Road & Commerce Drive, Interval #4

Movement	SB	SB
Directions Served	T	R
Maximum Queue (ft)	506	250
Average Queue (ft)	420	168
95th Queue (ft)	610	334
Link Distance (ft)	503	
Upstream Blk Time (%)	5	
Queuing Penalty (veh)	60	
Storage Bay Dist (ft)		150
Storage Blk Time (%)	25	0
Queuing Penalty (veh)	90	0

Intersection: 3: Redwood Road & Commerce Drive, All Intervals

Movement	EB	EB	EB	WB	WB	WB	NB	NB	NB	NB	SB	SB
Directions Served	L	T	R	L	T	R	L	T	T	R	L	T
Maximum Queue (ft)	204	259	174	75	91	85	334	535	488	170	438	528
Average Queue (ft)	115	48	49	21	28	35	65	306	316	10	147	382
95th Queue (ft)	185	144	105	57	72	74	194	464	454	85	365	588
Link Distance (ft)		1102			583			1013	1013			503
Upstream Blk Time (%)								0				3
Queuing Penalty (veh)								0				40
Storage Bay Dist (ft)	110		150	105		105	250			250	300	
Storage Blk Time (%)	20	0	0	0	0	1		11	14		0	15
Queuing Penalty (veh)	26	1	0	0	0	0		10	3		0	19

Intersection: 3: Redwood Road & Commerce Drive, All Intervals

Movement	SB	SB
Directions Served	T	R
Maximum Queue (ft)	537	250
Average Queue (ft)	411	180
95th Queue (ft)	605	341
Link Distance (ft)	503	
Upstream Blk Time (%)	5	
Queuing Penalty (veh)	65	
Storage Bay Dist (ft)		150
Storage Blk Time (%)	25	0
Queuing Penalty (veh)	94	2

Intersection: 11: Redwood Road & Aspen Hills Blvd, Interval #1

Movement	EB	EB	WB	WB	WB	WB	NB	NB	NB	NB	SB	SB
Directions Served	L	R	L	L	T	R	L	T	T	R	L	T
Maximum Queue (ft)	23	38	195	220	122	160	74	254	253	88	262	297
Average Queue (ft)	6	15	133	170	34	105	33	157	158	30	169	201
95th Queue (ft)	21	39	241	268	163	175	94	258	264	95	322	317
Link Distance (ft)					774			1024	1024			1500
Upstream Blk Time (%)												
Queuing Penalty (veh)												
Storage Bay Dist (ft)	100	100	200	200		100	100			150	200	
Storage Blk Time (%)			1	9	0	12	3	17	9		12	3
Queuing Penalty (veh)			2	23	2	32	18	4	14		139	9

Intersection: 11: Redwood Road & Aspen Hills Blvd, Interval #1

Movement	SB	SB
Directions Served	T	R
Maximum Queue (ft)	308	14
Average Queue (ft)	216	3
95th Queue (ft)	315	13
Link Distance (ft)	1500	
Upstream Blk Time (%)		
Queuing Penalty (veh)		
Storage Bay Dist (ft)		200
Storage Blk Time (%)	6	
Queuing Penalty (veh)	3	

Intersection: 11: Redwood Road & Aspen Hills Blvd, Interval #2

Movement	EB	EB	WB	WB	WB	WB	NB	NB	NB	NB	SB	SB
Directions Served	L	R	L	L	T	R	L	T	T	R	L	T
Maximum Queue (ft)	18	45	212	261	165	172	138	312	328	206	310	490
Average Queue (ft)	7	19	148	181	35	104	50	198	211	48	200	274
95th Queue (ft)	24	48	234	273	166	182	147	322	336	169	374	569
Link Distance (ft)					774			1024	1024			1500
Upstream Blk Time (%)												0
Queuing Penalty (veh)												0
Storage Bay Dist (ft)	100	100	200	200		100	100			150	200	
Storage Blk Time (%)			3	9	1	15	6	23	16		18	7
Queuing Penalty (veh)			9	26	8	43	46	5	27		233	21

Intersection: 11: Redwood Road & Aspen Hills Blvd, Interval #2

Movement	SB	SB
Directions Served	T	R
Maximum Queue (ft)	524	61
Average Queue (ft)	296	4
95th Queue (ft)	569	17
Link Distance (ft)	1500	
Upstream Blk Time (%)	0	
Queuing Penalty (veh)	0	
Storage Bay Dist (ft)		200
Storage Blk Time (%)	11	
Queuing Penalty (veh)	6	

Intersection: 11: Redwood Road & Aspen Hills Blvd, Interval #3

Movement	EB	EB	WB	WB	WB	WB	NB	NB	NB	NB	SB	SB
Directions Served	L	R	L	L	T	R	L	T	T	R	L	T
Maximum Queue (ft)	21	40	206	261	226	185	78	279	282	131	319	420
Average Queue (ft)	4	14	144	186	71	120	38	185	187	37	215	288
95th Queue (ft)	20	41	281	332	269	213	91	298	315	132	370	535
Link Distance (ft)					774			1024	1024			1500
Upstream Blk Time (%)												
Queuing Penalty (veh)												
Storage Bay Dist (ft)	100	100	200	200		100	100			150	200	
Storage Blk Time (%)			11	18	1	25	5	21	13		19	8
Queuing Penalty (veh)			28	49	6	65	38	5	20		220	25

Intersection: 11: Redwood Road & Aspen Hills Blvd, Interval #3

Movement	SB	SB
Directions Served	T	R
Maximum Queue (ft)	554	100
Average Queue (ft)	335	15
95th Queue (ft)	668	137
Link Distance (ft)	1500	
Upstream Blk Time (%)	0	
Queuing Penalty (veh)	0	
Storage Bay Dist (ft)		200
Storage Blk Time (%)	13	
Queuing Penalty (veh)	6	

Intersection: 11: Redwood Road & Aspen Hills Blvd, Interval #4

Movement	EB	EB	WB	WB	WB	WB	NB	NB	NB	NB	SB	SB
Directions Served	L	R	L	L	T	R	L	T	T	R	L	T
Maximum Queue (ft)	30	36	220	250	267	186	80	258	276	127	312	409
Average Queue (ft)	7	15	158	199	85	104	46	173	174	41	216	237
95th Queue (ft)	33	39	282	324	319	190	139	275	288	137	370	464
Link Distance (ft)					774			1024	1024			1500
Upstream Blk Time (%)												
Queuing Penalty (veh)												
Storage Bay Dist (ft)	100	100	200	200		100	100			150	200	
Storage Blk Time (%)			9	19	2	16	13	17	9		21	6
Queuing Penalty (veh)			25	50	8	43	88	4	15		248	17

Intersection: 11: Redwood Road & Aspen Hills Blvd, Interval #4

Movement	SB	SB
Directions Served	T	R
Maximum Queue (ft)	430	59
Average Queue (ft)	264	10
95th Queue (ft)	486	99
Link Distance (ft)	1500	
Upstream Blk Time (%)		
Queuing Penalty (veh)		
Storage Bay Dist (ft)		200
Storage Blk Time (%)	10	
Queuing Penalty (veh)	5	

Intersection: 11: Redwood Road & Aspen Hills Blvd, All Intervals

Movement	EB	EB	WB	WB	WB	WB	NB	NB	NB	NB	SB	SB
Directions Served	L	R	L	L	T	R	L	T	T	R	L	T
Maximum Queue (ft)	40	52	249	309	326	199	172	330	344	276	386	597
Average Queue (ft)	6	16	146	184	56	108	42	178	182	39	200	250
95th Queue (ft)	25	42	262	302	239	191	121	291	305	136	362	487
Link Distance (ft)					774			1024	1024			1500
Upstream Blk Time (%)												0
Queuing Penalty (veh)												0
Storage Bay Dist (ft)	100	100	200	200		100	100			150	200	
Storage Blk Time (%)			6	14	1	17	7	19	12		17	6
Queuing Penalty (veh)			16	37	6	45	47	5	19		210	18

Intersection: 11: Redwood Road & Aspen Hills Blvd, All Intervals

Movement	SB	SB
Directions Served	T	R
Maximum Queue (ft)	728	195
Average Queue (ft)	277	8
95th Queue (ft)	535	85
Link Distance (ft)	1500	
Upstream Blk Time (%)	0	
Queuing Penalty (veh)	0	
Storage Bay Dist (ft)		200
Storage Blk Time (%)	10	
Queuing Penalty (veh)	5	

Intersection: 13: Redwood Road & Sergeant Court Drive, Interval #1

Movement	EB	EB	WB	WB	NB	NB	NB	SB	SB	SB	SB
Directions Served	LT	R	LT	R	L	T	TR	L	T	T	R
Maximum Queue (ft)	108	50	42	116	49	19	22	126	91	81	2
Average Queue (ft)	45	26	17	72	25	3	4	77	18	17	0
95th Queue (ft)	138	57	53	126	65	29	22	129	86	104	5
Link Distance (ft)	820		637			503	503		1024	1024	
Upstream Blk Time (%)											
Queuing Penalty (veh)											
Storage Bay Dist (ft)		25		150	50			150			100
Storage Blk Time (%)	45	57	0	0	20			1	0	1	
Queuing Penalty (veh)	12	3	0	0	144			9	0	0	

Intersection: 13: Redwood Road & Sergeant Court Drive, Interval #2

Movement	EB	EB	WB	WB	NB	NB	NB	SB	SB	SB	SB
Directions Served	LT	R	LT	R	L	T	TR	L	T	T	R
Maximum Queue (ft)	212	36	93	144	54	45	15	152	287	292	73
Average Queue (ft)	133	22	55	82	27	10	4	99	82	93	7
95th Queue (ft)	290	58	130	155	73	60	18	170	283	319	74
Link Distance (ft)	820		637			503	503		1024	1024	
Upstream Blk Time (%)											
Queuing Penalty (veh)											
Storage Bay Dist (ft)		25		150	50			150			100
Storage Blk Time (%)	64	51	5	3	28	0		2	3	7	
Queuing Penalty (veh)	17	3	8	0	208	0		32	5	1	

Intersection: 13: Redwood Road & Sergeant Court Drive, Interval #3

Movement	EB	EB	WB	WB	NB	NB	NB	SB	SB	SB	SB
Directions Served	LT	R	LT	R	L	T	TR	L	T	T	R
Maximum Queue (ft)	210	49	142	135	46	17	17	225	617	641	52
Average Queue (ft)	132	26	102	76	24	2	3	109	288	323	11
95th Queue (ft)	329	62	206	140	62	27	17	246	786	819	94
Link Distance (ft)	820		637			503	503		1024	1024	
Upstream Blk Time (%)										0	
Queuing Penalty (veh)										1	
Storage Bay Dist (ft)		25		150	50			150			100
Storage Blk Time (%)	57	42	20	1	20	0		2	9	15	
Queuing Penalty (veh)	15	2	31	0	142	0		23	14	3	

Intersection: 13: Redwood Road & Sergeant Court Drive, Interval #4

Movement	EB	EB	WB	WB	NB	NB	NB	SB	SB	SB	SB
Directions Served	LT	R	LT	R	L	T	TR	L	T	T	R
Maximum Queue (ft)	152	36	190	101	42	24	14	185	377	415	25
Average Queue (ft)	113	20	162	61	19	7	3	99	162	182	7
95th Queue (ft)	343	50	280	99	55	51	14	215	563	629	76
Link Distance (ft)	820		637			503	503		1024	1024	
Upstream Blk Time (%)											
Queuing Penalty (veh)											
Storage Bay Dist (ft)		25		150	50			150			100
Storage Blk Time (%)	36	37	47	0	16	0		1	5	8	
Queuing Penalty (veh)	9	2	74	0	114	0		18	8	1	

Intersection: 13: Redwood Road & Sergeant Court Drive, All Intervals

Movement	EB	EB	WB	WB	NB	NB	NB	SB	SB	SB	SB
Directions Served	LT	R	LT	R	L	T	TR	L	T	T	R
Maximum Queue (ft)	284	55	192	160	70	75	33	238	656	693	101
Average Queue (ft)	106	24	84	73	24	5	3	96	138	154	6
95th Queue (ft)	292	57	210	133	64	44	18	198	513	555	70
Link Distance (ft)	820		637			503	503		1024	1024	
Upstream Blk Time (%)										0	
Queuing Penalty (veh)										0	
Storage Bay Dist (ft)		25		150	50			150			100
Storage Blk Time (%)	50	47	18	1	21	0		2	4	8	
Queuing Penalty (veh)	13	2	28	0	152	0		20	7	1	

Intersection: 19: 3600 West & 2100 North WB, Interval #1

Movement	WB	NB	SB
Directions Served	L	LT	TR
Maximum Queue (ft)	7	63	39
Average Queue (ft)	0	31	14
95th Queue (ft)	5	68	39
Link Distance (ft)	95	255	760
Upstream Blk Time (%)			
Queuing Penalty (veh)			
Storage Bay Dist (ft)			
Storage Blk Time (%)			
Queuing Penalty (veh)			

Intersection: 19: 3600 West & 2100 North WB, Interval #2

Movement	WB	NB	SB
Directions Served	L	LT	TR
Maximum Queue (ft)	7	66	34
Average Queue (ft)	1	36	15
95th Queue (ft)	10	70	40
Link Distance (ft)	95	255	760
Upstream Blk Time (%)			
Queuing Penalty (veh)			
Storage Bay Dist (ft)			
Storage Blk Time (%)			
Queuing Penalty (veh)			

Intersection: 19: 3600 West & 2100 North WB, Interval #3

Movement	WB	NB	SB
Directions Served	L	LT	TR
Maximum Queue (ft)	12	51	36
Average Queue (ft)	2	28	16
95th Queue (ft)	21	59	41
Link Distance (ft)	95	255	760
Upstream Blk Time (%)	1		
Queuing Penalty (veh)	3		
Storage Bay Dist (ft)			
Storage Blk Time (%)			
Queuing Penalty (veh)			

Intersection: 19: 3600 West & 2100 North WB, Interval #4

Movement	WB	NB	SB
Directions Served	L	LT	TR
Maximum Queue (ft)	10	68	41
Average Queue (ft)	3	38	17
95th Queue (ft)	31	78	46
Link Distance (ft)	95	255	760
Upstream Blk Time (%)	1		
Queuing Penalty (veh)	3		
Storage Bay Dist (ft)			
Storage Blk Time (%)			
Queuing Penalty (veh)			

Intersection: 19: 3600 West & 2100 North WB, All Intervals

Movement	WB	NB	SB
Directions Served	L	LT	TR
Maximum Queue (ft)	32	78	56
Average Queue (ft)	2	33	15
95th Queue (ft)	19	70	41
Link Distance (ft)	95	255	760
Upstream Blk Time (%)	0		
Queuing Penalty (veh)	2		
Storage Bay Dist (ft)			
Storage Blk Time (%)			
Queuing Penalty (veh)			

Intersection: 20: 3600 West & 2100 North EB, Interval #1

Movement	EB	NB	NB	SB
Directions Served	R	T	R	LT
Maximum Queue (ft)	2	68	66	151
Average Queue (ft)	1	26	43	97
95th Queue (ft)	5	75	74	174
Link Distance (ft)	105	2312		255
Upstream Blk Time (%)				0
Queuing Penalty (veh)				1
Storage Bay Dist (ft)			50	
Storage Blk Time (%)		0	6	
Queuing Penalty (veh)		1	2	

Intersection: 20: 3600 West & 2100 North EB, Interval #2

Movement	EB	EB	NB	NB	SB
Directions Served	T	R	T	R	LT
Maximum Queue (ft)	2	2	74	68	200
Average Queue (ft)	0	0	31	46	129
95th Queue (ft)	4	4	87	75	236
Link Distance (ft)	105	105	2312		255
Upstream Blk Time (%)					0
Queuing Penalty (veh)					1
Storage Bay Dist (ft)				50	
Storage Blk Time (%)			1	7	
Queuing Penalty (veh)			1	3	

Intersection: 20: 3600 West & 2100 North EB, Interval #3

Movement	EB	EB	NB	NB	SB
Directions Served	T	R	T	R	LT
Maximum Queue (ft)	2	2	57	69	182
Average Queue (ft)	0	0	24	46	116
95th Queue (ft)	4	4	62	76	204
Link Distance (ft)	105	105	2312		255
Upstream Blk Time (%)					1
Queuing Penalty (veh)					3
Storage Bay Dist (ft)				50	
Storage Blk Time (%)			1	6	
Queuing Penalty (veh)			2	2	

Intersection: 20: 3600 West & 2100 North EB, Interval #4

Movement	EB	NB	NB	SB
Directions Served	T	T	R	LT
Maximum Queue (ft)	2	74	66	178
Average Queue (ft)	0	28	42	107
95th Queue (ft)	4	80	71	203
Link Distance (ft)	105	2312		255
Upstream Blk Time (%)				2
Queuing Penalty (veh)				6
Storage Bay Dist (ft)			50	
Storage Blk Time (%)		1	6	
Queuing Penalty (veh)		2	2	

Intersection: 20: 3600 West & 2100 North EB, All Intervals

Movement	EB	EB	NB	NB	SB
Directions Served	T	R	T	R	LT
Maximum Queue (ft)	6	6	130	76	239
Average Queue (ft)	0	0	27	44	112
95th Queue (ft)	4	4	77	74	207
Link Distance (ft)	105	105	2312		255
Upstream Blk Time (%)					1
Queuing Penalty (veh)					3
Storage Bay Dist (ft)				50	
Storage Blk Time (%)			1	6	
Queuing Penalty (veh)			1	3	

Intersection: 22: 2100 North WB, Interval #1

Movement
Directions Served
Maximum Queue (ft)
Average Queue (ft)
95th Queue (ft)
Link Distance (ft)
Upstream Blk Time (%)
Queuing Penalty (veh)
Storage Bay Dist (ft)
Storage Blk Time (%)
Queuing Penalty (veh)

Intersection: 22: 2100 North WB, Interval #2

Movement	
Directions Served	
Maximum Queue (ft)	
Average Queue (ft)	
95th Queue (ft)	
Link Distance (ft)	
Upstream Blk Time (%)	
Queuing Penalty (veh)	
Storage Bay Dist (ft)	
Storage Blk Time (%)	
Queuing Penalty (veh)	

Intersection: 22: 2100 North WB, Interval #3

Movement	WB
Directions Served	LT
Maximum Queue (ft)	7
Average Queue (ft)	1
95th Queue (ft)	15
Link Distance (ft)	
Upstream Blk Time (%)	
Queuing Penalty (veh)	
Storage Bay Dist (ft)	100
Storage Blk Time (%)	
Queuing Penalty (veh)	

Intersection: 22: 2100 North WB, Interval #4

Movement	WB
Directions Served	LT
Maximum Queue (ft)	5
Average Queue (ft)	1
95th Queue (ft)	13
Link Distance (ft)	
Upstream Blk Time (%)	
Queuing Penalty (veh)	
Storage Bay Dist (ft)	100
Storage Blk Time (%)	
Queuing Penalty (veh)	

Intersection: 22: 2100 North WB, All Intervals

Movement	WB
Directions Served	LT
Maximum Queue (ft)	12
Average Queue (ft)	1
95th Queue (ft)	10
Link Distance (ft)	
Upstream Blk Time (%)	
Queuing Penalty (veh)	
Storage Bay Dist (ft)	100
Storage Blk Time (%)	
Queuing Penalty (veh)	

Intersection: 23: 2100 North EB, Interval #1

Movement	SE
Directions Served	L
Maximum Queue (ft)	21
Average Queue (ft)	5
95th Queue (ft)	22
Link Distance (ft)	271
Upstream Blk Time (%)	
Queuing Penalty (veh)	
Storage Bay Dist (ft)	
Storage Blk Time (%)	
Queuing Penalty (veh)	

Intersection: 23: 2100 North EB, Interval #2

Movement	SE
Directions Served	L
Maximum Queue (ft)	18
Average Queue (ft)	4
95th Queue (ft)	20
Link Distance (ft)	271
Upstream Blk Time (%)	
Queuing Penalty (veh)	
Storage Bay Dist (ft)	
Storage Blk Time (%)	
Queuing Penalty (veh)	

Intersection: 23: 2100 North EB, Interval #3

Movement	SE
Directions Served	L
Maximum Queue (ft)	15
Average Queue (ft)	3
95th Queue (ft)	17
Link Distance (ft)	271
Upstream Blk Time (%)	
Queuing Penalty (veh)	
Storage Bay Dist (ft)	
Storage Blk Time (%)	
Queuing Penalty (veh)	

Intersection: 23: 2100 North EB, Interval #4

Movement	EB	SE
Directions Served	T	L
Maximum Queue (ft)	2	26
Average Queue (ft)	0	7
95th Queue (ft)	5	26
Link Distance (ft)	83	271
Upstream Blk Time (%)		
Queuing Penalty (veh)		
Storage Bay Dist (ft)		
Storage Blk Time (%)		
Queuing Penalty (veh)		

Intersection: 23: 2100 North EB, All Intervals

Movement	EB	SE
Directions Served	T	L
Maximum Queue (ft)	2	30
Average Queue (ft)	0	5
95th Queue (ft)	2	22
Link Distance (ft)	83	271
Upstream Blk Time (%)		
Queuing Penalty (veh)		
Storage Bay Dist (ft)		
Storage Blk Time (%)		
Queuing Penalty (veh)		

Intersection: 24: 2100 North EB, Interval #1

Movement
Directions Served
Maximum Queue (ft)
Average Queue (ft)
95th Queue (ft)
Link Distance (ft)
Upstream Blk Time (%)
Queuing Penalty (veh)
Storage Bay Dist (ft)
Storage Blk Time (%)
Queuing Penalty (veh)

Intersection: 24: 2100 North EB, Interval #2

Movement
Directions Served
Maximum Queue (ft)
Average Queue (ft)
95th Queue (ft)
Link Distance (ft)
Upstream Blk Time (%)
Queuing Penalty (veh)
Storage Bay Dist (ft)
Storage Blk Time (%)
Queuing Penalty (veh)

Intersection: 24: 2100 North EB, Interval #3

Movement
Directions Served
Maximum Queue (ft)
Average Queue (ft)
95th Queue (ft)
Link Distance (ft)
Upstream Blk Time (%)
Queuing Penalty (veh)
Storage Bay Dist (ft)
Storage Blk Time (%)
Queuing Penalty (veh)

Intersection: 24: 2100 North EB, Interval #4

Movement
Directions Served
Maximum Queue (ft)
Average Queue (ft)
95th Queue (ft)
Link Distance (ft)
Upstream Blk Time (%)
Queuing Penalty (veh)
Storage Bay Dist (ft)
Storage Blk Time (%)
Queuing Penalty (veh)

Intersection: 24: 2100 North EB, All Intervals

Movement
Directions Served
Maximum Queue (ft)
Average Queue (ft)
95th Queue (ft)
Link Distance (ft)
Upstream Blk Time (%)
Queuing Penalty (veh)
Storage Bay Dist (ft)
Storage Blk Time (%)
Queuing Penalty (veh)

Intersection: 25: 2100 North WB, Interval #1

Movement	NW
Directions Served	L
Maximum Queue (ft)	6
Average Queue (ft)	0
95th Queue (ft)	6
Link Distance (ft)	273
Upstream Blk Time (%)	
Queuing Penalty (veh)	
Storage Bay Dist (ft)	
Storage Blk Time (%)	
Queuing Penalty (veh)	

Intersection: 25: 2100 North WB, Interval #2

Movement	NW
Directions Served	L
Maximum Queue (ft)	10
Average Queue (ft)	1
95th Queue (ft)	9
Link Distance (ft)	273
Upstream Blk Time (%)	
Queuing Penalty (veh)	
Storage Bay Dist (ft)	
Storage Blk Time (%)	
Queuing Penalty (veh)	

Intersection: 25: 2100 North WB, Interval #3

Movement
Directions Served
Maximum Queue (ft)
Average Queue (ft)
95th Queue (ft)
Link Distance (ft)
Upstream Blk Time (%)
Queuing Penalty (veh)
Storage Bay Dist (ft)
Storage Blk Time (%)
Queuing Penalty (veh)

Intersection: 25: 2100 North WB, Interval #4

Movement	NW
Directions Served	L
Maximum Queue (ft)	3
Average Queue (ft)	0
95th Queue (ft)	6
Link Distance (ft)	273
Upstream Blk Time (%)	
Queuing Penalty (veh)	
Storage Bay Dist (ft)	
Storage Blk Time (%)	
Queuing Penalty (veh)	

Intersection: 25: 2100 North WB, All Intervals

Movement	NW
Directions Served	L
Maximum Queue (ft)	14
Average Queue (ft)	0
95th Queue (ft)	6
Link Distance (ft)	273
Upstream Blk Time (%)	
Queuing Penalty (veh)	
Storage Bay Dist (ft)	
Storage Blk Time (%)	
Queuing Penalty (veh)	

Intersection: 29: , Interval #1

Movement
Directions Served
Maximum Queue (ft)
Average Queue (ft)
95th Queue (ft)
Link Distance (ft)
Upstream Blk Time (%)
Queuing Penalty (veh)
Storage Bay Dist (ft)
Storage Blk Time (%)
Queuing Penalty (veh)

Intersection: 29: , Interval #2

Movement
Directions Served
Maximum Queue (ft)
Average Queue (ft)
95th Queue (ft)
Link Distance (ft)
Upstream Blk Time (%)
Queuing Penalty (veh)
Storage Bay Dist (ft)
Storage Blk Time (%)
Queuing Penalty (veh)

Intersection: 29: , Interval #3

Movement
Directions Served
Maximum Queue (ft)
Average Queue (ft)
95th Queue (ft)
Link Distance (ft)
Upstream Blk Time (%)
Queuing Penalty (veh)
Storage Bay Dist (ft)
Storage Blk Time (%)
Queuing Penalty (veh)

Intersection: 29: , Interval #4

Movement
Directions Served
Maximum Queue (ft)
Average Queue (ft)
95th Queue (ft)
Link Distance (ft)
Upstream Blk Time (%)
Queuing Penalty (veh)
Storage Bay Dist (ft)
Storage Blk Time (%)
Queuing Penalty (veh)

Intersection: 29: , All Intervals

Movement
Directions Served
Maximum Queue (ft)
Average Queue (ft)
95th Queue (ft)
Link Distance (ft)
Upstream Blk Time (%)
Queuing Penalty (veh)
Storage Bay Dist (ft)
Storage Blk Time (%)
Queuing Penalty (veh)

Intersection: 31: 400 East & Crossroads Blvd, Interval #1

Movement	EB	EB	WB	NB	SB
Directions Served	LT	R	LT	LTR	LTR
Maximum Queue (ft)	98	2	102	29	99
Average Queue (ft)	32	0	24	14	49
95th Queue (ft)	112	4	93	34	97
Link Distance (ft)	662		1678	460	746
Upstream Blk Time (%)					
Queuing Penalty (veh)					
Storage Bay Dist (ft)		150			
Storage Blk Time (%)	0		1		
Queuing Penalty (veh)	0		0		

Intersection: 31: 400 East & Crossroads Blvd, Interval #2

Movement	EB	WB	WB	NB	SB
Directions Served	LT	LT	R	LTR	LTR
Maximum Queue (ft)	157	113	2	38	104
Average Queue (ft)	46	37	0	18	58
95th Queue (ft)	158	132	4	41	115
Link Distance (ft)	662	1678		460	746
Upstream Blk Time (%)					
Queuing Penalty (veh)					
Storage Bay Dist (ft)			100		
Storage Blk Time (%)	1	1			
Queuing Penalty (veh)	0	1			

Intersection: 31: 400 East & Crossroads Blvd, Interval #3

Movement	EB	EB	WB	WB	NB	SB
Directions Served	LT	R	LT	R	LTR	LTR
Maximum Queue (ft)	108	2	130	2	34	132
Average Queue (ft)	31	0	24	0	17	57
95th Queue (ft)	102	4	121	0	38	126
Link Distance (ft)	662		1678		460	746
Upstream Blk Time (%)						
Queuing Penalty (veh)						
Storage Bay Dist (ft)		150		100		
Storage Blk Time (%)	0		1			
Queuing Penalty (veh)	0		0			

Intersection: 31: 400 East & Crossroads Blvd, Interval #4

Movement	EB	EB	WB	NB	SB
Directions Served	LT	R	LT	LTR	LTR
Maximum Queue (ft)	85	2	106	39	86
Average Queue (ft)	25	0	28	19	43
95th Queue (ft)	98	4	106	44	87
Link Distance (ft)	662		1678	460	746
Upstream Blk Time (%)					
Queuing Penalty (veh)					
Storage Bay Dist (ft)		150			
Storage Blk Time (%)	0		1		
Queuing Penalty (veh)	0		0		

Intersection: 31: 400 East & Crossroads Blvd, All Intervals

Movement	EB	EB	WB	WB	NB	SB
Directions Served	LT	R	LT	R	LTR	LTR
Maximum Queue (ft)	187	6	197	4	50	144
Average Queue (ft)	34	0	28	0	17	51
95th Queue (ft)	120	3	114	2	40	108
Link Distance (ft)	662		1678		460	746
Upstream Blk Time (%)						
Queuing Penalty (veh)						
Storage Bay Dist (ft)		150		100		
Storage Blk Time (%)	1		1			
Queuing Penalty (veh)	0		0			

Intersection: 34: Crossroads Blvd, Interval #1

Movement	EB	NB
Directions Served	T	R
Maximum Queue (ft)	86	4
Average Queue (ft)	12	1
95th Queue (ft)	181	6
Link Distance (ft)	901	242
Upstream Blk Time (%)		
Queuing Penalty (veh)		
Storage Bay Dist (ft)		
Storage Blk Time (%)		
Queuing Penalty (veh)		

Intersection: 34: Crossroads Blvd, Interval #2

Movement	
Directions Served	
Maximum Queue (ft)	
Average Queue (ft)	
95th Queue (ft)	
Link Distance (ft)	
Upstream Blk Time (%)	
Queuing Penalty (veh)	
Storage Bay Dist (ft)	
Storage Blk Time (%)	
Queuing Penalty (veh)	

Intersection: 34: Crossroads Blvd, Interval #3

Movement	NB
Directions Served	R
Maximum Queue (ft)	8
Average Queue (ft)	1
95th Queue (ft)	9
Link Distance (ft)	242
Upstream Blk Time (%)	
Queuing Penalty (veh)	
Storage Bay Dist (ft)	
Storage Blk Time (%)	
Queuing Penalty (veh)	

Intersection: 34: Crossroads Blvd, Interval #4

Movement	NB
Directions Served	R
Maximum Queue (ft)	8
Average Queue (ft)	1
95th Queue (ft)	8
Link Distance (ft)	242
Upstream Blk Time (%)	
Queuing Penalty (veh)	
Storage Bay Dist (ft)	
Storage Blk Time (%)	
Queuing Penalty (veh)	

Intersection: 34: Crossroads Blvd, All Intervals

Movement	EB	NB
Directions Served	T	R
Maximum Queue (ft)	86	15
Average Queue (ft)	3	1
95th Queue (ft)	88	7
Link Distance (ft)	901	242
Upstream Blk Time (%)		
Queuing Penalty (veh)		
Storage Bay Dist (ft)		
Storage Blk Time (%)		
Queuing Penalty (veh)		

Intersection: 38: , Interval #1

Movement	EB	EB	NB	NB	NB	SB	SB	SB
Directions Served	L	R	L	T	T	T	T	R
Maximum Queue (ft)	309	291	228	65	102	309	288	37
Average Queue (ft)	205	197	154	20	33	121	107	8
95th Queue (ft)	380	342	258	68	100	337	307	34
Link Distance (ft)	951	951		1500	1500	2142	2142	
Upstream Blk Time (%)								
Queuing Penalty (veh)								
Storage Bay Dist (ft)			400					150
Storage Blk Time (%)							4	
Queuing Penalty (veh)							4	

Intersection: 38: , Interval #2

Movement	EB	EB	NB	NB	NB	SB	SB	SB
Directions Served	L	R	L	T	T	T	T	R
Maximum Queue (ft)	566	508	336	219	130	430	436	126
Average Queue (ft)	454	358	247	75	49	210	209	23
95th Queue (ft)	702	637	422	286	135	479	485	139
Link Distance (ft)	951	951		1500	1500	2142	2142	
Upstream Blk Time (%)								
Queuing Penalty (veh)								
Storage Bay Dist (ft)			400					150
Storage Blk Time (%)			8	0			9	
Queuing Penalty (veh)			64	0			9	

Intersection: 38: , Interval #3

Movement	EB	EB	NB	NB	NB	SB	SB	SB
Directions Served	L	R	L	T	T	T	T	R
Maximum Queue (ft)	860	762	458	387	208	364	340	67
Average Queue (ft)	726	615	357	139	60	173	166	14
95th Queue (ft)	1034	963	562	439	216	385	368	85
Link Distance (ft)	951	951		1500	1500	2142	2142	
Upstream Blk Time (%)	11	8						
Queuing Penalty (veh)	0	0						
Storage Bay Dist (ft)			400					150
Storage Blk Time (%)			30	0			5	
Queuing Penalty (veh)			231	0			5	

Intersection: 38: , Interval #4

Movement	EB	EB	NB	NB	NB	SB	SB	SB
Directions Served	L	R	L	T	T	T	T	R
Maximum Queue (ft)	950	923	511	499	364	378	382	108
Average Queue (ft)	911	782	433	275	161	181	189	19
95th Queue (ft)	1070	1206	722	796	641	437	448	117
Link Distance (ft)	951	951		1500	1500	2142	2142	
Upstream Blk Time (%)	67	51						
Queuing Penalty (veh)	0	0						
Storage Bay Dist (ft)			400					150
Storage Blk Time (%)			53	0			8	
Queuing Penalty (veh)			405	0			8	

Intersection: 38: , All Intervals

Movement	EB	EB	NB	NB	NB	SB	SB	SB
Directions Served	L	R	L	T	T	T	T	R
Maximum Queue (ft)	950	927	518	536	407	458	472	205
Average Queue (ft)	574	488	298	127	75	171	168	16
95th Queue (ft)	1072	977	567	483	347	417	413	101
Link Distance (ft)	951	951		1500	1500	2142	2142	
Upstream Blk Time (%)	19	15						
Queuing Penalty (veh)	0	0						
Storage Bay Dist (ft)			400					150
Storage Blk Time (%)			23	0			7	
Queuing Penalty (veh)			175	0			7	

Network Summary

Network wide Queuing Penalty, Interval #1: 603
Network wide Queuing Penalty, Interval #2: 1106
Network wide Queuing Penalty, Interval #3: 1374
Network wide Queuing Penalty, Interval #4: 1446
Network wide Queuing Penalty, All Intervals: 1132

HALES ENGINEERING
innovative transportation solutions

SimTraffic LOS Report

Project: Saratoga Springs - Cold Spring Ranch
Analysis Period: *Existing (2016) Plus Project*
Time Period: *Evening Peak Hour* **Project #:** *UT16-928*

Intersection: Redwood Road & Crossroads Blvd
Type: Signalized

Approach	Movement	Demand Volume	Volume Served		Delay/Veh (sec)	
			Avg	%	Avg	LOS
NB	L	241	240	99	61.7	*E*
	T	860	878	102	34.4	*C*
	R	132	131	99	4.9	*A*
	Subtotal	1,233	1,249	101	36.6	*D*
SB	L	310	268	86	72.6	*E*
	T	1,314	1,196	91	27.8	*C*
	R	605	530	88	12.1	*B*
	Subtotal	2,229	1,994	89	29.6	*C*
EB	L	410	412	100	52.1	*D*
	T	215	212	99	41.7	*D*
	R	25	26	103	13.8	*B*
	Subtotal	650	650	100	47.2	*D*
WB	L	200	202	101	56.7	*E*
	T	368	372	101	53.2	*D*
	R	180	175	97	17.4	*B*
	Subtotal	748	749	100	45.8	*D*
Total		4,861	4,642	95	36.7	*D*

Intersection: Redwood Road & Commerce Drive
Type: Signalized

Approach	Movement	Demand Volume	Volume Served		Delay/Veh (sec)	
			Avg	%	Avg	LOS
NB	L	83	76	91	41.2	*D*
	T	1,396	1,403	101	26.2	*C*
	R	24	26	107	9.1	*A*
	Subtotal	1,503	1,505	100	26.7	*C*
SB	L	129	110	85	61.8	*E*
	T	2,134	1,879	88	17.9	*B*
	R	372	326	88	10.0	*A*
	Subtotal	2,635	2,315	88	18.9	*B*
EB	L	162	158	98	60.1	*E*
	T	42	38	91	44.8	*D*
	R	90	92	103	18.7	*B*
	Subtotal	294	288	98	44.9	*D*
WB	L	22	20	90	54.3	*D*
	T	34	34	101	48.5	*D*
	R	78	83	106	18.4	*B*
	Subtotal	134	137	102	31.1	*C*
Total		4,566	4,245	93	23.9	*C*

HALES ENGINEERING
innovative transportation solutions

SimTraffic LOS Report

Project: Saratoga Springs - Cold Spring Ranch
Analysis Period: *Existing (2016) Plus Project*
Time Period: *Evening Peak Hour* **Project #:** *UT16-928*

Intersection: Redwood Road & Aspen Hills Blvd
Type: Unsignalized

Approach	Movement	Demand Volume	Volume Served		Delay/Veh (sec)	
			Avg	%	Avg	LOS
NB	L	23	19	82	270.3	*F*
	T	1,414	1,297	92	2.4	*A*
	R	161	145	90	3.3	*A*
	Subtotal	1,598	1,461	91	6.0	*A*
SB	L	270	272	101	69.0	*F*
	T	2,435	2,403	99	18.8	*C*
	R	50	52	104	16.6	*C*
	Subtotal	2,755	2,727	99	23.8	*C*
EB	L	9	0	0	1854.6	*F*
	R	24	2	8	1545.9	*F*
	Subtotal	33	2	6	1545.9	*F*
WB	L	168	0	0	3565.5	*F*
	R	270	5	2	2636.7	*F*
	Subtotal	***438***	***5***	***1***	***2636.7***	***F***
Total		4,823	4,195	87	59.6	*F*

Intersection: Redwood Road & Sergeant Court Drive
Type: Unsignalized

Approach	Movement	Demand Volume	Volume Served		Delay/Veh (sec)	
			Avg	%	Avg	LOS
NB	L	15	14	92	309.8	*F*
	T	1,488	1,497	101	6.3	*A*
	R	124	126	101	4.8	*A*
	Subtotal	1,627	1,637	101	8.8	*A*
SB	L	190	175	92	38.7	*E*
	T	2,420	2,214	91	6.7	*A*
	R	17	16	93	5.0	*A*
	Subtotal	2,627	2,405	92	9.0	*A*
EB	L	5	2	40	1557.8	*F*
	R	26	16	61	882.0	*F*
	Subtotal	31	18	58	957.1	*F*
WB	L	107	2	2	3069.7	*F*
	R	160	16	10	1387.4	*F*
	Subtotal	***267***	***18***	***7***	***1574.3***	***F***
Total		4,553	4,078	90	39.3	*E*

HALES ENGINEERING
innovative transportation solutions

SimTraffic LOS Report

Project: Saratoga Springs - Cold Spring Ranch
Analysis Period: *Existing (2016) Plus Project*
Time Period: *Evening Peak Hour* **Project #:** *UT16-928*

Intersection: 3600 West & 2100 North WB
Type: Unsignalized

Approach	Movement	Demand Volume	Volume Served		Delay/Veh (sec)	
			Avg	%	Avg	LOS
NB	L	43	41	96	42.6	*E*
	T	1	1	100	63.9	*F*
	Subtotal	44	42	95	43.1	*E*
SB	T	21	19	89	48.7	*E*
	R	1	2	200	30.0	*D*
	Subtotal	***22***	***21***	***95***	***46.9***	***E***
WB	L	234	240	103	0.3	*A*
	T	1,750	1,747	100	0.2	*A*
	R	4	5	125	0.0	*A*
	Subtotal	1,988	1,992	100	0.2	*A*
Total		2,054	2,055	100	1.6	*A*

Intersection: 3600 West & 2100 North EB
Type: Unsignalized

Approach	Movement	Demand Volume	Volume Served		Delay/Veh (sec)	
			Avg	%	Avg	LOS
NB	T	43	42	98	62.1	*F*
	R	182	169	93	80.5	*F*
	Subtotal	***225***	***211***	***94***	***76.8***	***F***
SB	L	13	13	98	30.3	*D*
	T	242	246	102	31.9	*D*
	Subtotal	255	259	102	31.8	*D*
EB	L	1	1	100	0.0	*A*
	T	954	977	102	0.4	*A*
	R	10	12	117	0.1	*A*
	Subtotal	965	990	103	0.4	*A*
Total		1,446	1,460	101	17.9	*C*

HALES ENGINEERING
innovative transportation solutions

SimTraffic LOS Report

Project: **Saratoga Springs - Cold Spring Ranch**
Analysis Period: ***Existing (2016) Plus Project***
Time Period: ***Evening Peak Hour*** **Project #:** ***UT16-928***

Intersection: **400 East & Crossroads Blvd**
Type: **Unsignalized**

Approach	Movement	Demand Volume	Volume Served		Delay/Veh (sec)	
			Avg	%	Avg	LOS
NB	L	8	8	100	22.4	*C*
	T	3	4	133	21.3	*C*
	R	16	17	105	6.1	*A*
	Subtotal	27	29	107	12.7	*B*
SB	L	38	38	101	29.2	*D*
	T	14	15	105	27.4	*D*
	R	53	53	100	15.9	*C*
	Subtotal	***105***	***106***	***101***	***22.3***	***C***
EB	L	36	31	87	7.7	*A*
	T	592	552	93	2.9	*A*
	R	10	9	88	0.8	*A*
	Subtotal	638	592	93	3.1	*A*
WB	L	31	31	101	6.7	*A*
	T	687	697	101	3.3	*A*
	R	45	47	105	2.2	*A*
	Subtotal	763	775	102	3.4	*A*
Total		1,533	1,502	98	4.8	*A*

2: Redwood Road & Crossroads Blvd Performance by movement Interval #1 5:00

Movement	EBL	EBT	EBR	WBL	WBT	WBR	NBL	NBT	NBR	SBL	SBT	SBR
Denied Delay (hr)	0.1	0.0	0.0	0.0	0.0	0.0	0.0	0.0	0.0	0.0	0.0	0.0
Denied Del/Veh (s)	2.6	0.3	3.2	0.0	0.0	0.0	2.6	0.4	2.6	0.2	0.0	0.0
Total Delay (hr)	1.5	0.6	0.0	0.8	1.4	0.2	0.9	1.9	0.0	1.3	2.1	0.4
Total Del/Veh (s)	51.0	41.6	15.0	54.3	50.2	16.8	54.2	29.8	4.3	67.2	24.7	10.3
Vehicles Entered	103	53	7	51	94	40	57	214	30	66	289	126
Vehicles Exited	102	53	7	53	94	40	58	218	30	58	284	126
Hourly Exit Rate	408	212	28	212	376	160	232	872	120	232	1136	504
Input Volume	403	211	25	196	362	177	237	845	130	305	1291	594
% of Volume	101	100	112	108	104	90	98	103	92	76	88	85

2: Redwood Road & Crossroads Blvd Performance by movement Interval #1 5:00

Movement	All
Denied Delay (hr)	0.2
Denied Del/Veh (s)	0.6
Total Delay (hr)	11.3
Total Del/Veh (s)	33.9
Vehicles Entered	1130
Vehicles Exited	1123
Hourly Exit Rate	4492
Input Volume	4776
% of Volume	94

2: Redwood Road & Crossroads Blvd Performance by movement Interval #2 5:15

Movement	EBL	EBT	EBR	WBL	WBT	WBR	NBL	NBT	NBR	SBL	SBT	SBR
Denied Delay (hr)	0.1	0.0	0.0	0.0	0.0	0.0	0.0	0.0	0.0	0.0	0.0	0.0
Denied Del/Veh (s)	2.7	0.3	2.7	0.0	0.0	0.0	2.4	0.5	2.5	0.3	0.0	0.0
Total Delay (hr)	1.6	0.7	0.0	0.9	1.5	0.2	1.1	2.4	0.1	1.4	2.6	0.5
Total Del/Veh (s)	49.4	43.3	12.6	56.0	53.3	19.0	58.8	34.8	5.2	63.9	28.8	12.9
Vehicles Entered	112	56	7	53	95	45	64	227	35	67	304	137
Vehicles Exited	103	51	6	54	99	46	64	233	35	72	314	138
Hourly Exit Rate	412	204	24	216	396	184	256	932	140	288	1256	552
Input Volume	432	226	26	211	387	189	254	905	139	326	1383	637
% of Volume	95	90	92	102	102	97	101	103	101	88	91	87

2: Redwood Road & Crossroads Blvd Performance by movement Interval #2 5:15

Movement	All
Denied Delay (hr)	0.2
Denied Del/Veh (s)	0.6
Total Delay (hr)	13.0
Total Del/Veh (s)	36.4
Vehicles Entered	1202
Vehicles Exited	1215
Hourly Exit Rate	4860
Input Volume	5115
% of Volume	95

2: Redwood Road & Crossroads Blvd Performance by movement Interval #3 5:30

Movement	EBL	EBT	EBR	WBL	WBT	WBR	NBL	NBT	NBR	SBL	SBT	SBR
Denied Delay (hr)	0.1	0.0	0.0	0.0	0.0	0.0	0.0	0.0	0.0	0.0	0.0	0.0
Denied Del/Veh (s)	2.6	0.3	3.4	0.0	0.0	0.0	2.5	0.5	2.4	0.1	0.0	0.0
Total Delay (hr)	1.4	0.6	0.0	0.8	1.4	0.2	1.1	2.1	0.0	1.5	2.4	0.5
Total Del/Veh (s)	43.7	35.7	10.8	55.8	51.7	16.7	60.7	33.1	4.5	70.4	28.1	11.9
Vehicles Entered	98	55	6	50	93	45	62	215	32	71	298	134
Vehicles Exited	99	55	7	45	82	42	62	220	31	73	303	136
Hourly Exit Rate	396	220	28	180	328	168	248	880	124	292	1212	544
Input Volume	403	211	25	196	362	177	237	845	130	305	1291	594
% of Volume	98	104	112	92	91	95	105	104	95	96	94	92

2: Redwood Road & Crossroads Blvd Performance by movement Interval #3 5:30

Movement	All
Denied Delay (hr)	0.2
Denied Del/Veh (s)	0.6
Total Delay (hr)	12.0
Total Del/Veh (s)	35.3
Vehicles Entered	1159
Vehicles Exited	1155
Hourly Exit Rate	4620
Input Volume	4776
% of Volume	97

2: Redwood Road & Crossroads Blvd Performance by movement Interval #4 5:45

Movement	EBL	EBT	EBR	WBL	WBT	WBR	NBL	NBT	NBR	SBL	SBT	SBR
Denied Delay (hr)	0.1	0.0	0.0	0.0	0.0	0.0	0.0	0.0	0.0	0.0	0.0	0.0
Denied Del/Veh (s)	2.5	0.3	2.8	0.0	0.0	0.0	2.5	0.4	2.6	0.2	0.0	0.0
Total Delay (hr)	1.6	0.6	0.0	0.8	1.4	0.2	1.1	2.2	0.0	1.3	2.2	0.5
Total Del/Veh (s)	47.4	35.1	15.0	49.7	46.8	14.7	61.4	34.9	5.1	64.8	25.7	12.2
Vehicles Entered	104	50	7	50	95	46	61	216	34	66	298	133
Vehicles Exited	109	53	7	50	98	46	56	207	34	65	295	130
Hourly Exit Rate	436	212	28	200	392	184	224	828	136	260	1180	520
Input Volume	403	211	25	196	362	177	237	845	130	305	1291	594
% of Volume	108	100	112	102	108	104	95	98	105	85	91	88

2: Redwood Road & Crossroads Blvd Performance by movement Interval #4 5:45

Movement	All
Denied Delay (hr)	0.2
Denied Del/Veh (s)	0.6
Total Delay (hr)	11.8
Total Del/Veh (s)	34.4
Vehicles Entered	1160
Vehicles Exited	1150
Hourly Exit Rate	4600
Input Volume	4776
% of Volume	96

2: Redwood Road & Crossroads Blvd Performance by movement Entire Run

Movement	EBL	EBT	EBR	WBL	WBT	WBR	NBL	NBT	NBR	SBL	SBT	SBR
Denied Delay (hr)	0.3	0.0	0.0	0.0	0.0	0.0	0.2	0.1	0.1	0.0	0.0	0.0
Denied Del/Veh (s)	2.6	0.3	3.0	0.0	0.0	0.0	2.5	0.4	2.5	0.2	0.0	0.0
Total Delay (hr)	6.1	2.5	0.1	3.3	5.7	0.9	4.3	8.5	0.2	5.5	9.3	1.8
Total Del/Veh (s)	52.1	41.7	13.8	56.7	53.2	17.4	61.7	34.4	4.9	72.6	27.8	12.1
Vehicles Entered	417	214	27	203	378	176	245	872	131	271	1189	530
Vehicles Exited	412	212	26	202	372	175	240	878	131	268	1196	530
Hourly Exit Rate	412	212	26	202	372	175	240	878	131	268	1196	530
Input Volume	410	215	25	200	368	180	241	860	132	310	1314	605
% of Volume	100	99	103	101	101	97	99	102	99	86	91	88

2: Redwood Road & Crossroads Blvd Performance by movement Entire Run

Movement	All
Denied Delay (hr)	0.7
Denied Del/Veh (s)	0.6
Total Delay (hr)	48.1
Total Del/Veh (s)	36.7
Vehicles Entered	4653
Vehicles Exited	4642
Hourly Exit Rate	4642
Input Volume	4861
% of Volume	95

3: Redwood Road & Commerce Drive Performance by movement Interval #1 5:00

Movement	EBL	EBT	EBR	WBL	WBT	WBR	NBL	NBT	NBR	SBL	SBT	SBR
Denied Delay (hr)	0.0	0.0	0.0	0.0	0.0	0.0	0.0	0.0	0.0	0.0	0.0	0.0
Denied Del/Veh (s)	2.8	0.9	2.7	4.0	0.6	3.8	0.0	0.0	0.0	0.0	0.2	0.1
Total Delay (hr)	0.7	0.1	0.1	0.1	0.1	0.1	0.2	2.4	0.0	0.5	2.1	0.2
Total Del/Veh (s)	57.5	44.4	17.7	43.6	42.5	16.1	37.1	24.3	9.0	61.9	16.3	8.0
Vehicles Entered	38	8	24	5	8	20	20	346	6	27	465	76
Vehicles Exited	40	9	25	5	8	20	20	334	6	28	452	76
Hourly Exit Rate	160	36	100	20	32	80	80	1336	24	112	1808	304
Input Volume	159	41	88	22	33	77	82	1371	24	127	2097	365
% of Volume	101	88	114	91	97	104	98	97	100	88	86	83

3: Redwood Road & Commerce Drive Performance by movement Interval #1 5:00

Movement	All
Denied Delay (hr)	0.1
Denied Del/Veh (s)	0.4
Total Delay (hr)	6.6
Total Del/Veh (s)	22.3
Vehicles Entered	1043
Vehicles Exited	1023
Hourly Exit Rate	4092
Input Volume	4486
% of Volume	91

3: Redwood Road & Commerce Drive Performance by movement Interval #2 5:15

Movement	EBL	EBT	EBR	WBL	WBT	WBR	NBL	NBT	NBR	SBL	SBT	SBR
Denied Delay (hr)	0.0	0.0	0.0	0.0	0.0	0.0	0.0	0.0	0.0	0.0	0.1	0.0
Denied Del/Veh (s)	2.8	0.7	3.0	4.3	0.5	3.8	0.0	0.0	0.4	0.0	0.6	0.6
Total Delay (hr)	0.7	0.1	0.1	0.1	0.1	0.1	0.3	2.9	0.0	0.5	2.7	0.3
Total Del/Veh (s)	56.2	36.9	20.4	45.6	48.2	19.1	43.7	27.2	9.3	62.0	19.1	11.2
Vehicles Entered	44	11	23	5	9	22	21	369	7	30	485	82
Vehicles Exited	45	11	24	5	9	22	20	356	7	29	479	81
Hourly Exit Rate	180	44	96	20	36	88	80	1424	28	116	1916	324
Input Volume	171	44	95	23	36	82	87	1470	25	136	2246	392
% of Volume	105	100	101	87	100	107	92	97	112	85	85	83

3: Redwood Road & Commerce Drive Performance by movement Interval #2 5:15

Movement	All
Denied Delay (hr)	0.2
Denied Del/Veh (s)	0.6
Total Delay (hr)	8.0
Total Del/Veh (s)	24.9
Vehicles Entered	1108
Vehicles Exited	1088
Hourly Exit Rate	4352
Input Volume	4807
% of Volume	91

3: Redwood Road & Commerce Drive Performance by movement Interval #3 5:30

Movement	EBL	EBT	EBR	WBL	WBT	WBR	NBL	NBT	NBR	SBL	SBT	SBR
Denied Delay (hr)	0.0	0.0	0.0	0.0	0.0	0.0	0.0	0.0	0.0	0.0	0.1	0.0
Denied Del/Veh (s)	2.8	0.5	3.0	4.4	0.3	3.9	0.1	0.0	0.0	0.0	0.6	0.1
Total Delay (hr)	0.6	0.1	0.1	0.1	0.1	0.1	0.2	2.6	0.0	0.5	2.4	0.3
Total Del/Veh (s)	54.5	44.3	15.6	52.8	48.7	18.6	37.5	25.1	10.0	56.3	17.7	10.5
Vehicles Entered	39	10	23	4	10	20	18	348	7	28	467	84
Vehicles Exited	37	11	23	5	10	21	18	356	7	27	478	85
Hourly Exit Rate	148	44	92	20	40	84	72	1424	28	108	1912	340
Input Volume	159	41	88	22	33	77	82	1371	24	127	2097	365
% of Volume	93	107	105	91	121	109	88	104	117	85	91	93

3: Redwood Road & Commerce Drive Performance by movement Interval #3 5:30

Movement	All
Denied Delay (hr)	0.2
Denied Del/Veh (s)	0.5
Total Delay (hr)	7.2
Total Del/Veh (s)	22.9
Vehicles Entered	1058
Vehicles Exited	1078
Hourly Exit Rate	4312
Input Volume	4486
% of Volume	96

3: Redwood Road & Commerce Drive Performance by movement Interval #4 5:45

Movement	EBL	EBT	EBR	WBL	WBT	WBR	NBL	NBT	NBR	SBL	SBT	SBR
Denied Delay (hr)	0.0	0.0	0.0	0.0	0.0	0.0	0.0	0.0	0.0	0.0	0.0	0.0
Denied Del/Veh (s)	2.7	0.5	2.6	4.3	0.4	3.9	0.2	0.0	0.0	0.0	0.3	0.2
Total Delay (hr)	0.7	0.1	0.1	0.1	0.1	0.1	0.2	2.4	0.0	0.4	2.2	0.2
Total Del/Veh (s)	59.8	46.7	20.0	57.4	43.4	17.0	36.3	22.9	8.1	54.5	16.4	9.2
Vehicles Entered	38	9	20	5	8	21	18	350	6	26	463	84
Vehicles Exited	36	8	19	4	7	20	18	356	6	26	470	84
Hourly Exit Rate	144	32	76	16	28	80	72	1424	24	104	1880	336
Input Volume	159	41	88	22	33	77	82	1371	24	127	2097	365
% of Volume	91	78	86	73	85	104	88	104	100	82	90	92

3: Redwood Road & Commerce Drive Performance by movement Interval #4 5:45

Movement	All
Denied Delay (hr)	0.1
Denied Del/Veh (s)	0.4
Total Delay (hr)	6.6
Total Del/Veh (s)	21.7
Vehicles Entered	1048
Vehicles Exited	1054
Hourly Exit Rate	4216
Input Volume	4486
% of Volume	94

3: Redwood Road & Commerce Drive Performance by movement Entire Run

Movement	EBL	EBT	EBR	WBL	WBT	WBR	NBL	NBT	NBR	SBL	SBT	SBR
Denied Delay (hr)	0.1	0.0	0.1	0.0	0.0	0.1	0.0	0.0	0.0	0.0	0.2	0.0
Denied Del/Veh (s)	2.8	0.7	2.8	4.0	0.4	3.9	0.1	0.0	0.1	0.0	0.4	0.3
Total Delay (hr)	2.7	0.5	0.5	0.3	0.5	0.4	0.9	10.3	0.1	1.9	9.4	0.9
Total Del/Veh (s)	60.1	44.8	18.7	54.3	48.5	18.4	41.2	26.2	9.1	61.8	17.9	10.0
Vehicles Entered	159	38	91	20	34	82	77	1413	26	112	1880	327
Vehicles Exited	158	38	92	20	34	83	76	1403	26	110	1879	326
Hourly Exit Rate	158	38	92	20	34	83	76	1403	26	110	1879	326
Input Volume	162	42	90	22	34	78	83	1396	24	129	2134	372
% of Volume	98	91	103	90	101	106	91	101	107	85	88	88

3: Redwood Road & Commerce Drive Performance by movement Entire Run

Movement	All
Denied Delay (hr)	0.6
Denied Del/Veh (s)	0.5
Total Delay (hr)	28.4
Total Del/Veh (s)	23.9
Vehicles Entered	4259
Vehicles Exited	4245
Hourly Exit Rate	4245
Input Volume	4566
% of Volume	93

11: Redwood Road & Aspen Hills Blvd Performance by movement Interval #1 5:00

Movement	EBL	EBR	WBL	WBR	NBL	NBT	NBR	SBL	SBT	SBR	All
Denied Delay (hr)	0.0	0.0	2.9	5.4	0.0	0.0	0.0	0.0	0.0	0.0	8.3
Denied Del/Veh (s)	0.1	0.2	283.3	278.0	0.0	0.0	0.0	0.0	0.0	0.0	26.0
Total Delay (hr)	0.3	0.5	4.6	3.6	0.2	0.2	0.0	1.4	2.7	0.1	13.5
Total Del/Veh (s)	547.8	308.2	865.4	587.5	125.1	2.2	2.9	66.7	15.5	14.5	43.0
Vehicles Entered	2	5	8	17	4	321	35	69	595	14	1070
Vehicles Exited	0	1	0	5	4	326	36	68	596	14	1050
Hourly Exit Rate	0	4	0	20	16	1304	144	272	2384	56	4200
Input Volume	9	24	165	265	23	1389	158	265	2392	49	4739
% of Volume	0	17	0	8	70	94	91	103	100	114	89

11: Redwood Road & Aspen Hills Blvd Performance by movement Interval #2 5:15

Movement	EBL	EBR	WBL	WBR	NBL	NBT	NBR	SBL	SBT	SBR	All
Denied Delay (hr)	0.0	0.0	12.9	22.7	0.0	0.0	0.0	0.0	0.0	0.0	35.6
Denied Del/Veh (s)	0.2	0.1	626.8	644.6	0.0	0.0	0.0	0.0	0.0	0.0	99.6
Total Delay (hr)	1.0	1.8	4.8	4.2	0.4	0.2	0.0	1.1	3.1	0.1	16.7
Total Del/Veh (s)	628.8	582.7	900.1	883.7	214.7	2.6	3.3	51.5	17.3	14.9	51.5
Vehicles Entered	3	6	0	0	6	329	37	71	620	15	1087
Vehicles Exited	0	0	0	0	4	327	37	68	614	15	1065
Hourly Exit Rate	0	0	0	0	16	1308	148	272	2456	60	4260
Input Volume	9	24	177	284	24	1488	169	284	2563	53	5075
% of Volume	0	0	0	0	67	88	88	96	96	113	84

11: Redwood Road & Aspen Hills Blvd Performance by movement Interval #3 5:30

Movement	EBL	EBR	WBL	WBR	NBL	NBT	NBR	SBL	SBT	SBR	All
Denied Delay (hr)	0.0	0.0	23.3	39.9	0.0	0.0	0.0	0.0	0.0	0.0	63.2
Denied Del/Veh (s)	0.3	0.1	736.9	736.0	0.0	0.0	0.0	0.0	0.0	0.0	168.0
Total Delay (hr)	1.6	3.3	4.8	4.2	0.7	0.2	0.0	1.4	3.1	0.0	19.3
Total Del/Veh (s)	741.9	737.6	900.0	884.1	368.1	2.6	3.5	62.9	17.7	14.0	60.6
Vehicles Entered	2	6	0	0	4	325	35	69	593	11	1045
Vehicles Exited	0	0	0	0	5	324	34	68	597	12	1040
Hourly Exit Rate	0	0	0	0	20	1296	136	272	2388	48	4160
Input Volume	9	24	165	265	23	1389	158	265	2392	49	4739
% of Volume	0	0	0	0	87	93	86	103	100	98	88

11: Redwood Road & Aspen Hills Blvd Performance by movement Interval #4 5:45

Movement	EBL	EBR	WBL	WBR	NBL	NBT	NBR	SBL	SBT	SBR	All
Denied Delay (hr)	0.0	0.0	33.3	56.5	0.0	0.0	0.0	0.0	0.0	0.0	89.8
Denied Del/Veh (s)	0.1	0.1	773.7	785.1	0.0	0.0	0.0	0.0	0.0	0.0	222.3
Total Delay (hr)	2.2	4.7	4.8	4.2	0.3	0.2	0.0	1.5	3.8	0.1	21.7
Total Del/Veh (s)	774.2	774.5	900.0	884.1	121.3	2.3	3.3	73.6	22.3	21.4	68.2
Vehicles Entered	2	6	0	0	6	322	37	65	590	12	1040
Vehicles Exited	0	0	0	0	7	320	38	68	597	12	1042
Hourly Exit Rate	0	0	0	0	28	1280	152	272	2388	48	4168
Input Volume	9	24	165	265	23	1389	158	265	2392	49	4739
% of Volume	0	0	0	0	122	92	96	103	100	98	88

11: Redwood Road & Aspen Hills Blvd Performance by movement Entire Run

Movement	EBL	EBR	WBL	WBR	NBL	NBT	NBR	SBL	SBT	SBR	All
Denied Delay (hr)	0.0	0.0	72.4	124.5	0.0	0.0	0.0	0.0	0.0	0.0	196.9
Denied Del/Veh (s)	0.2	0.1	1599.9	1623.9	0.0	0.0	0.0	0.0	0.0	0.0	152.3
Total Delay (hr)	5.2	10.3	18.8	16.1	1.6	0.9	0.1	5.3	12.7	0.2	71.2
Total Del/Veh (s)	1854.6	1545.9	3565.5	2636.7	270.3	2.4	3.3	69.0	18.8	16.6	59.6
Vehicles Entered	9	23	8	17	20	1297	144	274	2398	51	4241
Vehicles Exited	0	2	0	5	19	1297	145	272	2403	52	4195
Hourly Exit Rate	0	2	0	5	19	1297	145	272	2403	52	4195
Input Volume	9	24	168	270	23	1414	161	270	2435	50	4823
% of Volume	0	8	0	2	82	92	90	101	99	104	87

13: Redwood Road & Sergeant Court Drive Performance by movement Interval #1 5:00

Movement	EBL	EBR	WBL	WBR	NBL	NBT	NBR	SBL	SBT	SBR	All
Denied Delay (hr)	0.0	0.0	0.8	1.3	0.0	0.0	0.0	0.0	0.0	0.0	2.1
Denied Del/Veh (s)	0.1	3.4	125.3	111.6	0.4	0.0	0.1	0.0	0.0	0.0	7.0
Total Delay (hr)	0.1	0.6	3.4	1.8	0.2	0.5	0.0	0.4	0.8	0.0	7.8
Total Del/Veh (s)	456.6	225.8	670.2	263.3	151.5	4.9	4.0	33.3	5.2	4.1	26.3
Vehicles Entered	1	8	12	24	3	361	29	44	550	4	1036
Vehicles Exited	0	5	1	13	3	359	29	44	543	4	1001
Hourly Exit Rate	0	20	4	52	12	1436	116	176	2172	16	4004
Input Volume	5	26	105	157	15	1462	122	187	2378	17	4474
% of Volume	0	77	4	33	80	98	95	94	91	94	89

13: Redwood Road & Sergeant Court Drive Performance by movement Interval #2 5:15

Movement	EBL	EBR	WBL	WBR	NBL	NBT	NBR	SBL	SBT	SBR	All
Denied Delay (hr)	0.0	0.0	5.9	9.8	0.0	0.0	0.0	0.0	0.0	0.0	15.7
Denied Del/Veh (s)	0.1	3.4	563.3	576.8	0.1	0.0	0.3	0.0	0.0	0.0	49.8
Total Delay (hr)	0.4	1.3	4.2	3.0	0.4	0.7	0.1	0.5	1.2	0.0	11.7
Total Del/Veh (s)	646.3	433.6	899.8	899.7	235.6	6.7	5.3	37.1	7.2	5.1	38.2
Vehicles Entered	1	7	0	0	4	379	34	44	565	5	1039
Vehicles Exited	0	4	0	0	3	385	34	43	570	5	1044
Hourly Exit Rate	0	16	0	0	12	1540	136	172	2280	20	4176
Input Volume	5	27	113	168	16	1564	131	200	2547	18	4789
% of Volume	0	59	0	0	75	98	104	86	90	111	87

13: Redwood Road & Sergeant Court Drive Performance by movement Interval #3 5:30

Movement	EBL	EBR	WBL	WBR	NBL	NBT	NBR	SBL	SBT	SBR	All
Denied Delay (hr)	0.0	0.0	13.0	20.2	0.0	0.0	0.0	0.0	0.0	0.0	33.2
Denied Del/Veh (s)	0.4	3.9	711.4	711.9	0.0	0.0	0.1	0.1	0.0	0.0	101.2
Total Delay (hr)	0.5	2.0	4.3	3.0	0.5	0.8	0.0	0.6	1.2	0.0	12.9
Total Del/Veh (s)	652.8	560.7	856.3	829.1	273.7	7.4	5.1	44.1	7.6	5.5	43.0
Vehicles Entered	1	6	1	1	4	375	31	43	550	4	1016
Vehicles Exited	1	4	0	1	5	376	31	44	553	4	1019
Hourly Exit Rate	4	16	0	4	20	1504	124	176	2212	16	4076
Input Volume	5	26	105	157	15	1462	122	187	2378	17	4474
% of Volume	80	62	0	3	133	103	102	94	93	94	91

13: Redwood Road & Sergeant Court Drive Performance by movement Interval #4 5:45

Movement	EBL	EBR	WBL	WBR	NBL	NBT	NBR	SBL	SBT	SBR	All
Denied Delay (hr)	0.0	0.0	19.8	29.9	0.0	0.0	0.0	0.0	0.0	0.0	49.7
Denied Del/Veh (s)		3.4	764.6	786.1	0.1	0.0	0.1	0.0	0.0	0.0	143.9
Total Delay (hr)	0.7	2.5	4.3	3.0	0.3	0.6	0.0	0.5	1.0	0.0	12.8
Total Del/Veh (s)	841.2	631.5	863.9	822.3	246.1	5.7	4.2	34.5	6.1	5.0	42.7
Vehicles Entered	0	5	1	1	3	376	31	45	550	3	1015
Vehicles Exited	0	4	1	1	4	376	31	44	548	3	1012
Hourly Exit Rate	0	16	4	4	16	1504	124	176	2192	12	4048
Input Volume	5	26	105	157	15	1462	122	187	2378	17	4474
% of Volume	0	62	4	3	107	103	102	94	92	71	90

13: Redwood Road & Sergeant Court Drive Performance by movement Entire Run

Movement	EBL	EBR	WBL	WBR	NBL	NBT	NBR	SBL	SBT	SBR	All
Denied Delay (hr)	0.0	0.0	39.5	61.1	0.0	0.0	0.0	0.0	0.0	0.0	100.7
Denied Del/Veh (s)	0.2	3.7	1355.7	1358.4	0.1	0.0	0.1	0.0	0.0	0.0	83.6
Total Delay (hr)	1.7	6.4	16.2	10.8	1.3	2.6	0.2	1.9	4.1	0.0	45.2
Total Del/Veh (s)	1557.8	882.0	3069.7	1387.4	309.8	6.3	4.8	38.7	6.7	5.0	39.3
Vehicles Entered	4	25	13	26	15	1492	125	176	2215	16	4107
Vehicles Exited	2	16	2	16	14	1497	126	175	2214	16	4078
Hourly Exit Rate	2	16	2	16	14	1497	126	175	2214	16	4078
Input Volume	5	26	107	160	15	1488	124	190	2420	17	4553
% of Volume	40	61	2	10	92	101	101	92	91	93	90

19: 3600 West & 2100 North WB Performance by movement Interval #1 5:00

Movement	WBL	WBT	WBR	NBL	NBT	SBT	SBR	All
Denied Delay (hr)	0.0	0.0	0.0	0.0	0.0	0.0	0.0	0.0
Denied Del/Veh (s)	0.0	0.0		0.0		0.1	0.1	0.0
Total Delay (hr)	0.0	0.0	0.0	0.1	0.0	0.1	0.0	0.2
Total Del/Veh (s)	0.2	0.2		40.0		40.1	4.6	1.6
Vehicles Entered	61	424	0	12	0	4	1	502
Vehicles Exited	61	424	0	11	0	4	1	501
Hourly Exit Rate	244	1696	0	44	0	16	4	2004
Input Volume	230	1719	4	42	1	21	1	2018
% of Volume	106	99	0	105	0	76	400	99

19: 3600 West & 2100 North WB Performance by movement Interval #2 5:15

Movement	WBL	WBT	WBR	NBL	NBT	SBT	SBR	All
Denied Delay (hr)	0.0	0.0	0.0	0.0	0.0	0.0	0.0	0.0
Denied Del/Veh (s)	0.0	0.0	0.0	0.0		0.1		0.0
Total Delay (hr)	0.0	0.0	0.0	0.2	0.0	0.1	0.0	0.3
Total Del/Veh (s)	0.2	0.2	0.0	50.3		58.3		2.1
Vehicles Entered	61	455	1	12	0	5	0	534
Vehicles Exited	61	456	1	11	0	5	0	534
Hourly Exit Rate	244	1824	4	44	0	20	0	2136
Input Volume	246	1843	4	45	1	22	1	2162
% of Volume	99	99	100	98	0	91	0	99

19: 3600 West & 2100 North WB Performance by movement Interval #3 5:30

Movement	WBL	WBT	WBR	NBL	NBT	SBT	SBR	All
Denied Delay (hr)	0.0	0.0	0.0	0.0	0.0	0.0	0.0	0.0
Denied Del/Veh (s)	0.0	0.0	0.0	0.0		0.1		0.0
Total Delay (hr)	0.0	0.0	0.0	0.1	0.0	0.1	0.0	0.2
Total Del/Veh (s)	0.1	0.2	0.0	31.4		36.0		1.4
Vehicles Entered	60	431	1	10	0	5	0	507
Vehicles Exited	60	431	1	11	0	5	0	508
Hourly Exit Rate	240	1724	4	44	0	20	0	2032
Input Volume	230	1719	4	42	1	21	1	2018
% of Volume	104	100	100	105	0	95	0	101

19: 3600 West & 2100 North WB Performance by movement Interval #4 5:45

Movement	WBL	WBT	WBR	NBL	NBT	SBT	SBR	All
Denied Delay (hr)	0.0	0.0	0.0	0.0	0.0	0.0	0.0	0.0
Denied Del/Veh (s)	0.0	0.0	0.0	0.0		0.1		0.0
Total Delay (hr)	0.0	0.0	0.0	0.1	0.0	0.1	0.0	0.2
Total Del/Veh (s)	0.8	0.2	0.0	34.3		44.4		1.4
Vehicles Entered	59	436	2	8	0	5	0	510
Vehicles Exited	59	437	2	8	0	6	0	512
Hourly Exit Rate	236	1748	8	32	0	24	0	2048
Input Volume	230	1719	4	42	1	21	1	2018
% of Volume	103	102	200	76	0	114	0	101

19: 3600 West & 2100 North WB Performance by movement Entire Run

Movement	WBL	WBT	WBR	NBL	NBT	SBT	SBR	All
Denied Delay (hr)	0.0	0.0	0.0	0.0	0.0	0.0	0.0	0.0
Denied Del/Veh (s)	0.0	0.0	0.0	0.0	0.0	0.1	0.1	0.0
Total Delay (hr)	0.0	0.1	0.0	0.5	0.0	0.3	0.0	0.9
Total Del/Veh (s)	0.3	0.2	0.0	42.6	63.9	48.7	30.0	1.6
Vehicles Entered	241	1747	5	42	1	19	2	2057
Vehicles Exited	240	1747	5	41	1	19	2	2055
Hourly Exit Rate	240	1747	5	41	1	19	2	2055
Input Volume	234	1750	4	43	1	21	1	2054
% of Volume	103	100	125	96	100	89	200	100

20: 3600 West & 2100 North EB Performance by movement Interval #1 5:00

Movement	EBL	EBT	EBR	NBT	NBR	SBL	SBT	All
Denied Delay (hr)	0.0	0.0	0.0	0.0	0.0	0.0	0.0	0.0
Denied Del/Veh (s)		0.0	0.0	0.3	1.0	0.0	0.0	0.1
Total Delay (hr)	0.0	0.0	0.0	0.0	0.1	0.0	0.5	0.7
Total Del/Veh (s)		0.4	0.2	14.7	8.7	29.0	29.6	7.1
Vehicles Entered	0	242	3	12	42	4	61	364
Vehicles Exited	0	242	3	12	43	4	60	364
Hourly Exit Rate	0	968	12	48	172	16	240	1456
Input Volume	1	937	10	42	179	13	238	1420
% of Volume	0	103	120	114	96	123	101	103

20: 3600 West & 2100 North EB Performance by movement Interval #2 5:15

Movement	EBL	EBT	EBR	NBT	NBR	SBL	SBT	All
Denied Delay (hr)	0.0	0.0	0.0	0.0	0.0	0.0	0.0	0.0
Denied Del/Veh (s)		0.0	0.0	0.3	0.9	0.0	0.0	0.1
Total Delay (hr)	0.0	0.0	0.0	0.1	0.1	0.0	0.6	0.9
Total Del/Veh (s)		0.4	0.1	15.0	9.4	29.1	34.7	8.1
Vehicles Entered	0	252	3	12	50	4	62	383
Vehicles Exited	0	252	3	12	48	4	63	382
Hourly Exit Rate	0	1008	12	48	192	16	252	1528
Input Volume	1	1004	11	45	192	14	255	1522
% of Volume	0	100	109	107	100	114	99	100

20: 3600 West & 2100 North EB Performance by movement Interval #3 5:30

Movement	EBL	EBT	EBR	NBT	NBR	SBL	SBT	All
Denied Delay (hr)	0.0	0.0	0.0	0.0	0.0	0.0	0.0	0.0
Denied Del/Veh (s)		0.0	0.0	0.3	1.1	0.0	0.0	0.2
Total Delay (hr)	0.0	0.0	0.0	0.2	0.9	0.0	0.5	1.7
Total Del/Veh (s)		0.4	0.1	49.9	58.0	29.7	30.2	15.6
Vehicles Entered	0	241	3	10	52	3	63	372
Vehicles Exited	0	241	3	10	45	3	63	365
Hourly Exit Rate	0	964	12	40	180	12	252	1460
Input Volume	1	937	10	42	179	13	238	1420
% of Volume	0	103	120	95	101	92	106	103

20: 3600 West & 2100 North EB Performance by movement Interval #4 5:45

Movement	EBT	EBR	NBT	NBR	SBL	SBT	All
Denied Delay (hr)	0.0	0.0	0.0	0.0	0.0	0.0	0.0
Denied Del/Veh (s)	0.0	0.0	0.6	2.3	0.0	0.0	0.3
Total Delay (hr)	0.0	0.0	0.5	3.0	0.0	0.5	4.1
Total Del/Veh (s)	0.4	0.2	161.2	214.0	36.3	29.1	39.7
Vehicles Entered	242	3	11	40	2	62	360
Vehicles Exited	242	3	9	34	2	60	350
Hourly Exit Rate	968	12	36	136	8	240	1400
Input Volume	937	10	42	179	13	238	1420
% of Volume	103	120	86	76	62	101	99

20: 3600 West & 2100 North EB Performance by movement Entire Run

Movement	EBL	EBT	EBR	NBT	NBR	SBL	SBT	All
Denied Delay (hr)	0.0	0.0	0.0	0.0	0.1	0.0	0.0	0.1
Denied Del/Veh (s)	0.0	0.0	0.0	0.4	1.3	0.0	0.0	0.2
Total Delay (hr)	0.0	0.1	0.0	0.8	4.2	0.1	2.2	7.4
Total Del/Veh (s)	0.0	0.4	0.1	62.1	80.5	30.3	31.9	17.9
Vehicles Entered	1	977	12	45	184	13	247	1479
Vehicles Exited	1	977	12	42	169	13	246	1460
Hourly Exit Rate	1	977	12	42	169	13	246	1460
Input Volume	1	954	10	43	182	13	242	1446
% of Volume	100	102	117	98	93	98	102	101

22: 2100 North WB Performance by movement Interval #1 5:00

Movement	WBL	WBT	All
Denied Delay (hr)	0.0	0.1	0.1
Denied Del/Veh (s)	1.1	0.7	0.7
Total Delay (hr)	0.0	0.4	0.4
Total Del/Veh (s)	2.2	2.6	2.6
Vehicles Entered	2	483	485
Vehicles Exited	2	485	487
Hourly Exit Rate	8	1940	1948
Input Volume	6	1953	1959
% of Volume	133	99	99

22: 2100 North WB Performance by movement Interval #2 5:15

Movement	WBL	WBT	All
Denied Delay (hr)	0.0	0.1	0.1
Denied Del/Veh (s)	1.9	0.7	0.7
Total Delay (hr)	0.0	0.4	0.4
Total Del/Veh (s)	3.6	2.8	2.8
Vehicles Entered	1	519	520
Vehicles Exited	1	518	519
Hourly Exit Rate	4	2072	2076
Input Volume	6	2093	2099
% of Volume	67	99	99

22: 2100 North WB Performance by movement Interval #3 5:30

Movement	WBL	WBT	All
Denied Delay (hr)	0.0	0.1	0.1
Denied Del/Veh (s)	2.0	0.7	0.7
Total Delay (hr)	0.0	0.4	0.4
Total Del/Veh (s)	2.1	2.6	2.6
Vehicles Entered	1	491	492
Vehicles Exited	1	493	494
Hourly Exit Rate	4	1972	1976
Input Volume	6	1953	1959
% of Volume	67	101	101

22: 2100 North WB Performance by movement Interval #4 5:45

Movement	WBL	WBT	All
Denied Delay (hr)	0.0	0.1	0.1
Denied Del/Veh (s)	1.7	0.7	0.7
Total Delay (hr)	0.0	0.4	0.4
Total Del/Veh (s)	2.4	2.6	2.6
Vehicles Entered	1	496	497
Vehicles Exited	1	497	498
Hourly Exit Rate	4	1988	1992
Input Volume	6	1953	1959
% of Volume	67	102	102

22: 2100 North WB Performance by movement Entire Run

Movement	WBL	WBT	All
Denied Delay (hr)	0.0	0.4	0.4
Denied Del/Veh (s)	1.3	0.7	0.7
Total Delay (hr)	0.0	1.5	1.5
Total Del/Veh (s)	2.5	2.7	2.7
Vehicles Entered	6	1989	1995
Vehicles Exited	6	1992	1998
Hourly Exit Rate	6	1992	1998
Input Volume	6	1988	1994
% of Volume	100	100	100

23: 2100 North EB Performance by movement Interval #1 5:00

Movement	EBT	SEL	All
Denied Delay (hr)	0.0	0.0	0.0
Denied Del/Veh (s)	0.0	0.0	0.0
Total Delay (hr)	0.0	0.0	0.0
Total Del/Veh (s)	0.3	4.7	0.3
Vehicles Entered	288	2	290
Vehicles Exited	288	2	290
Hourly Exit Rate	1152	8	1160
Input Volume	1129	6	1135
% of Volume	102	133	102

23: 2100 North EB Performance by movement Interval #2 5:15

Movement	EBT	SEL	All
Denied Delay (hr)	0.0	0.0	0.0
Denied Del/Veh (s)	0.0	0.0	0.0
Total Delay (hr)	0.0	0.0	0.0
Total Del/Veh (s)	0.3	5.2	0.3
Vehicles Entered	304	1	305
Vehicles Exited	304	1	305
Hourly Exit Rate	1216	4	1220
Input Volume	1210	6	1216
% of Volume	100	67	100

23: 2100 North EB Performance by movement Interval #3 5:30

Movement	EBT	SEL	All
Denied Delay (hr)	0.0	0.0	0.0
Denied Del/Veh (s)	0.0	0.0	0.0
Total Delay (hr)	0.0	0.0	0.0
Total Del/Veh (s)	0.3	5.4	0.3
Vehicles Entered	289	1	290
Vehicles Exited	289	1	290
Hourly Exit Rate	1156	4	1160
Input Volume	1129	6	1135
% of Volume	102	67	102

23: 2100 North EB Performance by movement Interval #4 5:45

Movement	EBT	SEL	All
Denied Delay (hr)	0.0	0.0	0.0
Denied Del/Veh (s)	0.0	0.0	0.0
Total Delay (hr)	0.0	0.0	0.0
Total Del/Veh (s)	0.3	5.8	0.3
Vehicles Entered	278	1	279
Vehicles Exited	278	2	280
Hourly Exit Rate	1112	8	1120
Input Volume	1129	6	1135
% of Volume	98	133	99

23: 2100 North EB Performance by movement Entire Run

Movement	EBT	SEL	All
Denied Delay (hr)	0.0	0.0	0.0
Denied Del/Veh (s)	0.0	0.0	0.0
Total Delay (hr)	0.1	0.0	0.1
Total Del/Veh (s)	0.3	5.3	0.3
Vehicles Entered	1159	6	1165
Vehicles Exited	1159	6	1165
Hourly Exit Rate	1159	6	1165
Input Volume	1149	6	1155
% of Volume	101	100	101

24: 2100 North EB Performance by movement Interval #1 5:00

Movement	EBL	EBT	All
Denied Delay (hr)	0.0	0.0	0.0
Denied Del/Veh (s)		0.2	0.2
Total Delay (hr)	0.0	0.1	0.1
Total Del/Veh (s)		1.5	1.5
Vehicles Entered	0	245	245
Vehicles Exited	0	246	246
Hourly Exit Rate	0	984	984
Input Volume	1	948	949
% of Volume	0	104	104

24: 2100 North EB Performance by movement Interval #2 5:15

Movement	EBL	EBT	All
Denied Delay (hr)	0.0	0.0	0.0
Denied Del/Veh (s)		0.2	0.2
Total Delay (hr)	0.0	0.1	0.1
Total Del/Veh (s)		1.4	1.4
Vehicles Entered	0	254	254
Vehicles Exited	0	255	255
Hourly Exit Rate	0	1020	1020
Input Volume	1	1016	1017
% of Volume	0	100	100

24: 2100 North EB Performance by movement Interval #3 5:30

Movement	EBL	EBT	All
Denied Delay (hr)	0.0	0.0	0.0
Denied Del/Veh (s)		0.2	0.2
Total Delay (hr)	0.0	0.1	0.1
Total Del/Veh (s)		1.5	1.5
Vehicles Entered	0	245	245
Vehicles Exited	0	245	245
Hourly Exit Rate	0	980	980
Input Volume	1	948	949
% of Volume	0	103	103

24: 2100 North EB Performance by movement Interval #4 5:45

Movement	EBL	EBT	All
Denied Delay (hr)	0.0	0.0	0.0
Denied Del/Veh (s)		0.2	0.2
Total Delay (hr)	0.0	0.1	0.1
Total Del/Veh (s)		1.4	1.4
Vehicles Entered	0	244	244
Vehicles Exited	0	245	245
Hourly Exit Rate	0	980	980
Input Volume	1	948	949
% of Volume	0	103	103

24: 2100 North EB Performance by movement Entire Run

Movement	EBL	EBT	All
Denied Delay (hr)	0.0	0.1	0.1
Denied Del/Veh (s)		0.2	0.2
Total Delay (hr)	0.0	0.4	0.4
Total Del/Veh (s)		1.5	1.5
Vehicles Entered	0	989	989
Vehicles Exited	0	990	990
Hourly Exit Rate	0	990	990
Input Volume	1	965	966
% of Volume	0	103	102

25: 2100 North WB Performance by movement Interval #1 5:00

Movement	WBT	NWL	All
Denied Delay (hr)	0.0	0.0	0.0
Denied Del/Veh (s)	0.0		0.0
Total Delay (hr)	0.0	0.0	0.0
Total Del/Veh (s)	0.2		0.2
Vehicles Entered	436	0	436
Vehicles Exited	436	0	436
Hourly Exit Rate	1744	0	1744
Input Volume	1763	1	1764
% of Volume	99	0	99

25: 2100 North WB Performance by movement Interval #2 5:15

Movement	WBT	NWL	All
Denied Delay (hr)	0.0	0.0	0.0
Denied Del/Veh (s)	0.0		0.0
Total Delay (hr)	0.0	0.0	0.0
Total Del/Veh (s)	0.2		0.2
Vehicles Entered	467	0	467
Vehicles Exited	467	0	467
Hourly Exit Rate	1868	0	1868
Input Volume	1888	1	1889
% of Volume	99	0	99

25: 2100 North WB Performance by movement Interval #3 5:30

Movement	WBT	NWL	All
Denied Delay (hr)	0.0	0.0	0.0
Denied Del/Veh (s)	0.0		0.0
Total Delay (hr)	0.0	0.0	0.0
Total Del/Veh (s)	0.2		0.2
Vehicles Entered	442	0	442
Vehicles Exited	442	0	442
Hourly Exit Rate	1768	0	1768
Input Volume	1763	1	1764
% of Volume	100	0	100

25: 2100 North WB Performance by movement Interval #4 5:45

Movement	WBT	NWL	All
Denied Delay (hr)	0.0	0.0	0.0
Denied Del/Veh (s)	0.0		0.0
Total Delay (hr)	0.0	0.0	0.0
Total Del/Veh (s)	0.2		0.2
Vehicles Entered	445	0	445
Vehicles Exited	445	0	445
Hourly Exit Rate	1780	0	1780
Input Volume	1763	1	1764
% of Volume	101	0	101

25: 2100 North WB Performance by movement Entire Run

Movement	WBT	NWL	All
Denied Delay (hr)	0.0	0.0	0.0
Denied Del/Veh (s)	0.0		0.0
Total Delay (hr)	0.1	0.0	0.1
Total Del/Veh (s)	0.2		0.2
Vehicles Entered	1790	0	1790
Vehicles Exited	1790	0	1790
Hourly Exit Rate	1790	0	1790
Input Volume	1794	1	1795
% of Volume	100	0	100

31: 400 East & Crossroads Blvd Performance by movement Interval #1 5:00

Movement	EBL	EBT	EBR	WBL	WBT	WBR	NBL	NBT	NBR	SBL	SBT	SBR
Denied Delay (hr)	0.0	0.0	0.0	0.0	0.0	0.0	0.0	0.0	0.0	0.0	0.0	0.0
Denied Del/Veh (s)	0.0	0.0	0.0	0.6	0.7	1.7	0.1	0.1	0.1	0.1	0.2	0.2
Total Delay (hr)	0.0	0.1	0.0	0.0	0.1	0.0	0.0	0.0	0.0	0.1	0.0	0.1
Total Del/Veh (s)	7.0	2.4	0.5	5.4	2.8	2.0	11.1	18.7	6.3	26.0	25.2	18.5
Vehicles Entered	7	131	3	7	173	12	2	1	4	8	4	10
Vehicles Exited	6	133	3	7	175	12	2	1	4	9	4	10
Hourly Exit Rate	24	532	12	28	700	48	8	4	16	36	16	40
Input Volume	35	582	10	30	675	44	8	3	16	37	14	52
% of Volume	69	91	120	93	104	109	100	133	100	97	114	77

31: 400 East & Crossroads Blvd Performance by movement Interval #1 5:00

Movement	All
Denied Delay (hr)	0.0
Denied Del/Veh (s)	0.4
Total Delay (hr)	0.4
Total Del/Veh (s)	4.1
Vehicles Entered	362
Vehicles Exited	366
Hourly Exit Rate	1464
Input Volume	1506
% of Volume	97

31: 400 East & Crossroads Blvd Performance by movement Interval #2 5:15

Movement	EBL	EBT	EBR	WBL	WBT	WBR	NBL	NBT	NBR	SBL	SBT	SBR
Denied Delay (hr)	0.0	0.0	0.0	0.0	0.0	0.0	0.0	0.0	0.0	0.0	0.0	0.0
Denied Del/Veh (s)	0.0	0.0	0.0	0.8	0.8	1.9	0.1	0.2	0.1	0.2	0.2	0.2
Total Delay (hr)	0.0	0.1	0.0	0.0	0.2	0.0	0.0	0.0	0.0	0.1	0.0	0.1
Total Del/Veh (s)	6.5	2.8	1.5	7.8	3.4	1.5	22.7	26.9	5.8	34.5	27.9	15.9
Vehicles Entered	8	149	2	8	179	12	2	1	5	9	4	14
Vehicles Exited	8	148	2	9	176	12	2	1	5	9	4	14
Hourly Exit Rate	32	592	8	36	704	48	8	4	20	36	16	56
Input Volume	38	623	11	33	723	47	8	3	17	40	15	56
% of Volume	84	95	73	109	97	102	100	133	118	90	107	100

31: 400 East & Crossroads Blvd Performance by movement Interval #2 5:15

Movement	All
Denied Delay (hr)	0.0
Denied Del/Veh (s)	0.4
Total Delay (hr)	0.6
Total Del/Veh (s)	4.9
Vehicles Entered	393
Vehicles Exited	390
Hourly Exit Rate	1560
Input Volume	1614
% of Volume	97

31: 400 East & Crossroads Blvd Performance by movement Interval #3 5:30

Movement	EBL	EBT	EBR	WBL	WBT	WBR	NBL	NBT	NBR	SBL	SBT	SBR
Denied Delay (hr)	0.0	0.0	0.0	0.0	0.0	0.0	0.0	0.0	0.0	0.0	0.0	0.0
Denied Del/Veh (s)	0.0	0.0	0.0	0.8	0.6	1.8	0.1	0.1	0.1	0.2	0.2	0.2
Total Delay (hr)	0.0	0.1	0.0	0.0	0.2	0.0	0.0	0.0	0.0	0.1	0.0	0.1
Total Del/Veh (s)	8.1	3.2	0.8	7.3	3.2	2.1	35.9	14.1	5.7	23.6	25.9	15.6
Vehicles Entered	9	143	2	8	170	12	2	1	4	10	5	13
Vehicles Exited	9	139	2	8	171	12	2	1	4	10	5	14
Hourly Exit Rate	36	556	8	32	684	48	8	4	16	40	20	56
Input Volume	35	582	10	30	675	44	8	3	16	37	14	52
% of Volume	103	96	80	107	101	109	100	133	100	108	143	108

31: 400 East & Crossroads Blvd Performance by movement Interval #3 5:30

Movement	All
Denied Delay (hr)	0.0
Denied Del/Veh (s)	0.4
Total Delay (hr)	0.5
Total Del/Veh (s)	4.9
Vehicles Entered	379
Vehicles Exited	377
Hourly Exit Rate	1508
Input Volume	1506
% of Volume	100

31: 400 East & Crossroads Blvd Performance by movement Interval #4 5:45

Movement	EBL	EBT	EBR	WBL	WBT	WBR	NBL	NBT	NBR	SBL	SBT	SBR
Denied Delay (hr)	0.0	0.0	0.0	0.0	0.0	0.0	0.0	0.0	0.0	0.0	0.0	0.0
Denied Del/Veh (s)	0.0	0.0	0.0	1.0	0.7	1.9	0.1	0.1	0.1	0.2	0.2	0.2
Total Delay (hr)	0.0	0.1	0.0	0.0	0.2	0.0	0.0	0.0	0.0	0.1	0.0	0.1
Total Del/Veh (s)	7.0	3.2	0.5	5.3	3.3	3.0	20.1	25.6	5.4	27.0	23.0	12.2
Vehicles Entered	7	130	3	7	174	11	2	1	5	9	3	15
Vehicles Exited	8	132	3	7	174	11	2	1	5	10	3	15
Hourly Exit Rate	32	528	12	28	696	44	8	4	20	40	12	60
Input Volume	35	582	10	30	675	44	8	3	16	37	14	52
% of Volume	91	91	120	93	103	100	100	133	125	108	86	115

31: 400 East & Crossroads Blvd Performance by movement Interval #4 5:45

Movement	All
Denied Delay (hr)	0.0
Denied Del/Veh (s)	0.4
Total Delay (hr)	0.5
Total Del/Veh (s)	4.7
Vehicles Entered	367
Vehicles Exited	371
Hourly Exit Rate	1484
Input Volume	1506
% of Volume	99

31: 400 East & Crossroads Blvd Performance by movement Entire Run

Movement	EBL	EBT	EBR	WBL	WBT	WBR	NBL	NBT	NBR	SBL	SBT	SBR
Denied Delay (hr)	0.0	0.0	0.0	0.0	0.1	0.0	0.0	0.0	0.0	0.0	0.0	0.0
Denied Del/Veh (s)	0.0	0.0	0.0	0.8	0.7	1.8	0.1	0.1	0.1	0.2	0.2	0.2
Total Delay (hr)	0.1	0.5	0.0	0.1	0.6	0.0	0.0	0.0	0.0	0.3	0.1	0.2
Total Del/Veh (s)	7.7	2.9	0.8	6.7	3.3	2.2	22.4	21.3	6.1	29.2	27.4	15.9
Vehicles Entered	31	552	9	31	696	47	8	4	17	37	15	52
Vehicles Exited	31	552	9	31	697	47	8	4	17	38	15	53
Hourly Exit Rate	31	552	9	31	697	47	8	4	17	38	15	53
Input Volume	36	592	10	31	687	45	8	3	16	38	14	53
% of Volume	87	93	88	101	101	105	100	133	105	101	105	100

31: 400 East & Crossroads Blvd Performance by movement Entire Run

Movement	All
Denied Delay (hr)	0.2
Denied Del/Veh (s)	0.4
Total Delay (hr)	2.0
Total Del/Veh (s)	4.8
Vehicles Entered	1499
Vehicles Exited	1502
Hourly Exit Rate	1502
Input Volume	1533
% of Volume	98

34: Crossroads Blvd Performance by movement Interval #1 5:00

Movement	EBT	EBR	WBT	NBR	All
Denied Delay (hr)	0.0	0.0	0.0	0.0	0.0
Denied Del/Veh (s)	0.0	0.0	0.0		0.0
Total Delay (hr)	0.2	0.0	0.0	0.0	0.2
Total Del/Veh (s)	4.4	1.3	0.3		2.1
Vehicles Entered	136	5	186	0	327
Vehicles Exited	136	5	185	0	326
Hourly Exit Rate	544	20	740	0	1304
Input Volume	626	20	735	1	1382
% of Volume	87	100	101	0	94

34: Crossroads Blvd Performance by movement Interval #2 5:15

Movement	EBT	EBR	WBT	NBR	All
Denied Delay (hr)	0.0	0.0	0.0	0.0	0.0
Denied Del/Veh (s)	0.0	0.0	0.0		0.0
Total Delay (hr)	0.2	0.0	0.0	0.0	0.2
Total Del/Veh (s)	4.6	1.1	0.3		2.2
Vehicles Entered	154	5	194	0	353
Vehicles Exited	159	5	194	0	358
Hourly Exit Rate	636	20	776	0	1432
Input Volume	673	21	788	1	1483
% of Volume	95	95	98	0	97

34: Crossroads Blvd Performance by movement Interval #3 5:30

Movement	EBT	EBR	WBT	NBR	All
Denied Delay (hr)	0.0	0.0	0.0	0.0	0.0
Denied Del/Veh (s)	0.0	0.0	0.0		0.0
Total Delay (hr)	0.2	0.0	0.0	0.0	0.2
Total Del/Veh (s)	4.8	1.1	0.3		2.3
Vehicles Entered	153	6	187	0	346
Vehicles Exited	154	6	187	0	347
Hourly Exit Rate	616	24	748	0	1388
Input Volume	626	20	735	1	1382
% of Volume	98	120	102	0	100

34: Crossroads Blvd Performance by movement Interval #4 5:45

Movement	EBT	EBR	WBT	NBR	All
Denied Delay (hr)	0.0	0.0	0.0	0.0	0.0
Denied Del/Veh (s)	0.0	0.0	0.0		0.0
Total Delay (hr)	0.2	0.0	0.0	0.0	0.2
Total Del/Veh (s)	4.8	1.4	0.3		2.2
Vehicles Entered	147	5	191	0	343
Vehicles Exited	144	5	191	0	340
Hourly Exit Rate	576	20	764	0	1360
Input Volume	626	20	735	1	1382
% of Volume	92	100	104	0	98

34: Crossroads Blvd Performance by movement Entire Run

Movement	EBT	EBR	WBT	NBR	All
Denied Delay (hr)	0.0	0.0	0.0	0.0	0.0
Denied Del/Veh (s)	0.0	0.0	0.0	0.1	0.0
Total Delay (hr)	0.8	0.0	0.1	0.0	0.9
Total Del/Veh (s)	4.7	1.2	0.3	2.6	2.2
Vehicles Entered	590	21	758	1	1370
Vehicles Exited	593	22	758	1	1374
Hourly Exit Rate	593	22	758	1	1374
Input Volume	638	20	748	1	1407
% of Volume	93	109	101	100	98

38: Performance by movement Interval #1 5:00

Movement	EBL	EBR	NBL	NBT	SBT	SBR	All
Denied Delay (hr)	0.0	0.0	0.0	0.0	0.1	0.0	0.1
Denied Del/Veh (s)	0.2	0.2	0.0	0.0	0.5	1.4	0.3
Total Delay (hr)	2.3	1.6	1.1	0.2	2.5	0.1	7.7
Total Del/Veh (s)	340.1	130.5	138.2	2.6	13.1	7.4	24.8
Vehicles Entered	20	40	24	307	647	27	1065
Vehicles Exited	7	30	20	309	648	28	1042
Hourly Exit Rate	28	120	80	1236	2592	112	4168
Input Volume	74	157	118	1545	2549	98	4541
% of Volume	38	76	68	80	102	114	92

38: Performance by movement Interval #2 5:15

Movement	EBL	EBR	NBL	NBT	SBT	SBR	All
Denied Delay (hr)	0.0	0.0	0.0	0.0	0.1	0.0	0.1
Denied Del/Veh (s)	0.2	0.2	0.0	0.0	0.5	1.4	0.4
Total Delay (hr)	5.2	3.6	1.5	0.3	3.8	0.1	14.5
Total Del/Veh (s)	519.2	233.3	170.7	3.3	19.3	11.2	44.4
Vehicles Entered	19	43	25	302	689	25	1103
Vehicles Exited	9	37	26	300	669	25	1066
Hourly Exit Rate	36	148	104	1200	2676	100	4264
Input Volume	79	168	126	1656	2732	105	4866
% of Volume	46	88	83	72	98	95	88

38: Performance by movement Interval #3 5:30

Movement	EBL	EBR	NBL	NBT	SBT	SBR	All
Denied Delay (hr)	0.0	0.0	0.0	0.0	0.1	0.0	0.1
Denied Del/Veh (s)	4.6	3.7	0.0	0.0	0.4	1.3	0.5
Total Delay (hr)	7.9	5.7	2.0	0.4	2.4	0.1	18.5
Total Del/Veh (s)	650.1	339.4	222.6	4.9	12.7	6.9	58.3
Vehicles Entered	17	40	26	298	621	27	1029
Vehicles Exited	8	35	22	296	639	28	1028
Hourly Exit Rate	32	140	88	1184	2556	112	4112
Input Volume	74	157	118	1545	2549	98	4541
% of Volume	43	89	75	77	100	114	91

38: Performance by movement Interval #4 5:45

Movement	EBL	EBR	NBL	NBT	SBT	SBR	All
Denied Delay (hr)	0.2	0.7	0.0	0.0	0.1	0.0	1.0
Denied Del/Veh (s)	53.4	61.9	0.0	0.0	0.5	1.3	3.4
Total Delay (hr)	9.8	5.7	2.0	0.4	3.1	0.1	21.1
Total Del/Veh (s)	688.7	366.1	229.6	4.7	16.6	10.1	65.7
Vehicles Entered	14	32	22	298	652	27	1045
Vehicles Exited	9	36	26	295	630	26	1022
Hourly Exit Rate	36	144	104	1180	2520	104	4088
Input Volume	74	157	118	1545	2549	98	4541
% of Volume	49	92	88	76	99	106	90

38: Performance by movement Entire Run

Movement	EBL	EBR	NBL	NBT	SBT	SBR	All
Denied Delay (hr)	0.3	0.7	0.0	0.0	0.3	0.0	1.4
Denied Del/Veh (s)	12.9	16.0	0.0	0.0	0.5	1.4	1.2
Total Delay (hr)	25.2	16.6	6.7	1.3	11.8	0.3	61.8
Total Del/Veh (s)	1207.8	377.7	237.9	4.0	16.1	9.1	51.8
Vehicles Entered	71	154	97	1206	2610	106	4244
Vehicles Exited	33	138	95	1200	2585	106	4157
Hourly Exit Rate	33	138	95	1200	2585	106	4157
Input Volume	75	160	120	1573	2595	100	4622
% of Volume	44	86	79	76	100	106	90

Total Network Performance By Interval

Interval Start	5:00	5:15	5:30	5:45	All
Denied Delay (hr)	10.9	52.0	97.1	140.9	301.0
Denied Del/Veh (s)	15.4	65.6	122.0	166.2	103.7
Total Delay (hr)	50.6	68.3	74.7	81.2	274.9
Total Del/Veh (s)	64.3	80.5	90.5	98.6	97.1
Vehicles Entered	2449	2554	2385	2401	9800
Vehicles Exited	2343	2467	2410	2361	9583
Hourly Exit Rate	9372	9868	9640	9444	9583
Input Volume	47783	51188	47783	47783	48634
% of Volume	20	19	20	20	20

Intersection: 2: Redwood Road & Crossroads Blvd, Interval #1

Movement	EB	EB	EB	EB	EB	EB	WB	WB	WB	WB	WB	WB
Directions Served	L	L	T	T	T	R	L	L	T	T	T	R
Maximum Queue (ft)	211	237	127	84	22	25	129	142	144	145	134	120
Average Queue (ft)	146	170	85	37	7	9	79	91	94	93	77	61
95th Queue (ft)	223	250	137	89	25	27	132	147	148	145	139	120
Link Distance (ft)			1586	1586					901	901		
Upstream Blk Time (%)												
Queuing Penalty (veh)												
Storage Bay Dist (ft)	700	700			500	500	220	220			340	340
Storage Blk Time (%)							0	0	0			
Queuing Penalty (veh)							0	0	0			

Intersection: 2: Redwood Road & Crossroads Blvd, Interval #1

Movement	NB	NB	NB	NB	NB	SB	SB	SB	SB	SB
Directions Served	L	L	T	T	R	L	L	T	T	R
Maximum Queue (ft)	151	199	304	277	41	179	158	312	321	130
Average Queue (ft)	77	131	218	199	20	117	96	181	194	79
95th Queue (ft)	165	207	317	296	45	181	170	326	335	141
Link Distance (ft)			1242	1242				1013	1013	1013
Upstream Blk Time (%)										
Queuing Penalty (veh)										
Storage Bay Dist (ft)	200	200			300	450	450			
Storage Blk Time (%)		1	11	1						
Queuing Penalty (veh)		3	27	1						

Intersection: 2: Redwood Road & Crossroads Blvd, Interval #2

Movement	EB	EB	EB	EB	EB	EB	WB	WB	WB	WB	WB	WB
Directions Served	L	L	T	T	T	R	L	L	T	T	T	R
Maximum Queue (ft)	214	236	136	109	34	25	127	139	146	148	136	133
Average Queue (ft)	157	180	90	52	9	9	78	92	98	103	86	64
95th Queue (ft)	234	262	140	116	31	28	131	148	150	161	141	129
Link Distance (ft)			1586	1586					901	901		
Upstream Blk Time (%)												
Queuing Penalty (veh)												
Storage Bay Dist (ft)	700	700			500	500	220	220			340	340
Storage Blk Time (%)												
Queuing Penalty (veh)												

Intersection: 2: Redwood Road & Crossroads Blvd, Interval #2

Movement	NB	NB	NB	NB	NB	SB	SB	SB	SB	SB
Directions Served	L	L	T	T	R	L	L	T	T	R
Maximum Queue (ft)	154	196	325	323	45	178	174	330	336	175
Average Queue (ft)	86	137	245	231	21	126	110	204	222	99
95th Queue (ft)	169	207	340	335	45	185	185	356	377	180
Link Distance (ft)			1242	1242				1013	1013	1013
Upstream Blk Time (%)										
Queuing Penalty (veh)										
Storage Bay Dist (ft)	200	200			300	450	450			
Storage Blk Time (%)	0	1	19	2				0		
Queuing Penalty (veh)	0	4	48	3				1		

Intersection: 2: Redwood Road & Crossroads Blvd, Interval #3

Movement	EB	EB	EB	EB	EB	EB	WB	WB	WB	WB	WB	WB
Directions Served	L	L	T	T	T	R	L	L	T	T	T	R
Maximum Queue (ft)	222	252	136	101	26	28	109	139	141	139	119	118
Average Queue (ft)	137	162	89	44	6	9	69	94	99	101	78	64
95th Queue (ft)	226	255	146	110	25	27	116	151	144	148	132	122
Link Distance (ft)			1586	1586					901	901		
Upstream Blk Time (%)												
Queuing Penalty (veh)												
Storage Bay Dist (ft)	700	700			500	500	220	220			340	340
Storage Blk Time (%)								0				
Queuing Penalty (veh)								0				

Intersection: 2: Redwood Road & Crossroads Blvd, Interval #3

Movement	NB	NB	NB	NB	NB	SB	SB	SB	SB	SB
Directions Served	L	L	T	T	R	L	L	T	T	R
Maximum Queue (ft)	160	210	315	289	40	191	178	307	314	150
Average Queue (ft)	89	140	223	210	21	134	109	187	201	94
95th Queue (ft)	171	218	321	307	44	202	186	362	381	158
Link Distance (ft)			1242	1242				1013	1013	1013
Upstream Blk Time (%)										
Queuing Penalty (veh)										
Storage Bay Dist (ft)	200	200			300	450	450			
Storage Blk Time (%)	0	1	13	1				0		
Queuing Penalty (veh)	0	2	30	1				1		

Intersection: 2: Redwood Road & Crossroads Blvd, Interval #4

Movement	EB	EB	EB	EB	EB	EB	WB	WB	WB	WB	WB	WB
Directions Served	L	L	T	T	T	R	L	L	T	T	T	R
Maximum Queue (ft)	226	242	120	93	24	36	112	130	140	147	134	107
Average Queue (ft)	147	165	81	40	8	13	70	88	97	101	83	60
95th Queue (ft)	230	245	134	95	27	39	116	132	145	156	140	109
Link Distance (ft)			1586	1586					901	901		
Upstream Blk Time (%)												
Queuing Penalty (veh)												
Storage Bay Dist (ft)	700	700			500	500	220	220			340	340
Storage Blk Time (%)												
Queuing Penalty (veh)												

Intersection: 2: Redwood Road & Crossroads Blvd, Interval #4

Movement	NB	NB	NB	NB	NB	SB	SB	SB	SB	SB
Directions Served	L	L	T	T	R	L	L	T	T	R
Maximum Queue (ft)	157	212	318	306	45	176	166	287	316	157
Average Queue (ft)	103	145	215	206	22	116	96	172	193	91
95th Queue (ft)	183	224	309	309	40	182	175	306	333	172
Link Distance (ft)			1242	1242				1013	1013	1013
Upstream Blk Time (%)										
Queuing Penalty (veh)										
Storage Bay Dist (ft)	200	200			300	450	450			
Storage Blk Time (%)	0	1	15	2				0		
Queuing Penalty (veh)	0	6	35	2				1		

Intersection: 2: Redwood Road & Crossroads Blvd, All Intervals

Movement	EB	EB	EB	EB	EB	EB	WB	WB	WB	WB	WB	WB
Directions Served	L	L	T	T	T	R	L	L	T	T	T	R
Maximum Queue (ft)	253	285	148	132	37	45	150	172	168	168	156	157
Average Queue (ft)	147	169	86	43	8	10	74	91	97	100	81	62
95th Queue (ft)	229	254	139	103	27	30	125	145	147	153	138	120
Link Distance (ft)			1586	1586					901	901		
Upstream Blk Time (%)												
Queuing Penalty (veh)												
Storage Bay Dist (ft)	700	700			500	500	220	220			340	340
Storage Blk Time (%)							0	0	0			
Queuing Penalty (veh)							0	0	0			

Intersection: 2: Redwood Road & Crossroads Blvd, All Intervals

Movement	NB	NB	NB	NB	NB	SB	SB	SB	SB	SB
Directions Served	L	L	T	T	R	L	L	T	T	R
Maximum Queue (ft)	185	262	354	351	62	216	210	406	405	192
Average Queue (ft)	89	138	225	211	21	123	103	186	202	91
95th Queue (ft)	174	214	324	314	44	189	180	340	359	165
Link Distance (ft)			1242	1242				1013	1013	1013
Upstream Blk Time (%)										
Queuing Penalty (veh)										
Storage Bay Dist (ft)	200	200			300	450	450			
Storage Blk Time (%)	0	1	15	1				0		
Queuing Penalty (veh)	0	4	35	2				1		

Intersection: 3: Redwood Road & Commerce Drive, Interval #1

Movement	EB	EB	EB	WB	WB	WB	NB	NB	NB	NB	SB	SB
Directions Served	L	T	R	L	T	R	L	T	T	R	L	T
Maximum Queue (ft)	179	123	104	42	72	77	77	333	344	51	179	410
Average Queue (ft)	118	45	54	17	27	33	42	248	255	9	89	248
95th Queue (ft)	193	144	107	46	73	77	84	358	366	83	187	419
Link Distance (ft)		1102			583			1013	1013			503
Upstream Blk Time (%)												0
Queuing Penalty (veh)												5
Storage Bay Dist (ft)	110		150	105		105	250			250	300	
Storage Blk Time (%)	24	0	0		0	1		9	11			5
Queuing Penalty (veh)	31	0	0		0	1		7	3			6

Intersection: 3: Redwood Road & Commerce Drive, Interval #1

Movement	SB	SB
Directions Served	T	R
Maximum Queue (ft)	441	250
Average Queue (ft)	274	106
95th Queue (ft)	440	284
Link Distance (ft)	503	
Upstream Blk Time (%)	0	
Queuing Penalty (veh)	5	
Storage Bay Dist (ft)		150
Storage Blk Time (%)	19	
Queuing Penalty (veh)	70	

Intersection: 3: Redwood Road & Commerce Drive, Interval #2

Movement	EB	EB	EB	WB	WB	WB	NB	NB	NB	NB	SB	SB
Directions Served	L	T	R	L	T	R	L	T	T	R	L	T
Maximum Queue (ft)	184	126	110	47	63	71	170	406	410	55	155	448
Average Queue (ft)	129	43	51	19	27	38	62	296	304	16	96	306
95th Queue (ft)	201	138	111	52	68	72	181	426	430	121	169	492
Link Distance (ft)		1102			583			1013	1013			503
Upstream Blk Time (%)												0
Queuing Penalty (veh)												4
Storage Bay Dist (ft)	110		150	105		105	250			250	300	
Storage Blk Time (%)	24	1	0		1	0		13	17			8
Queuing Penalty (veh)	33	2	0		1	0		12	4			11

Intersection: 3: Redwood Road & Commerce Drive, Interval #2

Movement	SB	SB
Directions Served	T	R
Maximum Queue (ft)	482	250
Average Queue (ft)	335	151
95th Queue (ft)	532	329
Link Distance (ft)	503	
Upstream Blk Time (%)	1	
Queuing Penalty (veh)	13	
Storage Bay Dist (ft)		150
Storage Blk Time (%)	22	0
Queuing Penalty (veh)	85	1

Intersection: 3: Redwood Road & Commerce Drive, Interval #3

Movement	EB	EB	EB	WB	WB	WB	NB	NB	NB	NB	SB	SB
Directions Served	L	T	R	L	T	R	L	T	T	R	L	T
Maximum Queue (ft)	160	119	83	44	67	68	175	423	436	51	207	424
Average Queue (ft)	116	43	45	17	35	37	65	276	278	11	106	289
95th Queue (ft)	172	131	91	50	71	77	215	447	453	85	247	488
Link Distance (ft)		1102			583			1013	1013			503
Upstream Blk Time (%)												1
Queuing Penalty (veh)												13
Storage Bay Dist (ft)	110		150	105		105	250			250	300	
Storage Blk Time (%)	18	0	0		0	0		10	12			6
Queuing Penalty (veh)	24	1	0		0	0		8	3			8

Intersection: 3: Redwood Road & Commerce Drive, Interval #3

Movement	SB	SB
Directions Served	T	R
Maximum Queue (ft)	453	250
Average Queue (ft)	318	157
95th Queue (ft)	513	339
Link Distance (ft)	503	
Upstream Blk Time (%)	1	
Queuing Penalty (veh)	15	
Storage Bay Dist (ft)		150
Storage Blk Time (%)	20	0
Queuing Penalty (veh)	73	0

Intersection: 3: Redwood Road & Commerce Drive, Interval #4

Movement	EB	EB	EB	WB	WB	WB	NB	NB	NB	NB	SB	SB
Directions Served	L	T	R	L	T	R	L	T	T	R	L	T
Maximum Queue (ft)	162	101	86	54	46	74	111	346	350	51	176	411
Average Queue (ft)	120	44	44	20	22	39	48	252	262	10	90	249
95th Queue (ft)	192	158	93	59	51	82	127	377	386	84	189	435
Link Distance (ft)		1102			583			1013	1013			503
Upstream Blk Time (%)												0
Queuing Penalty (veh)												3
Storage Bay Dist (ft)	110		150	105		105	250			250	300	
Storage Blk Time (%)	23			0		1		9	11			4
Queuing Penalty (veh)	30			0		0		8	3			6

Intersection: 3: Redwood Road & Commerce Drive, Interval #4

Movement	SB	SB
Directions Served	T	R
Maximum Queue (ft)	456	250
Average Queue (ft)	283	105
95th Queue (ft)	485	275
Link Distance (ft)	503	
Upstream Blk Time (%)	1	
Queuing Penalty (veh)	7	
Storage Bay Dist (ft)		150
Storage Blk Time (%)	18	
Queuing Penalty (veh)	67	

Intersection: 3: Redwood Road & Commerce Drive, All Intervals

Movement	EB	EB	EB	WB	WB	WB	NB	NB	NB	NB	SB	SB
Directions Served	L	T	R	L	T	R	L	T	T	R	L	T
Maximum Queue (ft)	201	210	160	67	91	102	238	444	460	166	259	482
Average Queue (ft)	121	44	48	18	28	37	54	268	275	11	95	273
95th Queue (ft)	190	143	101	52	67	77	161	408	414	94	201	463
Link Distance (ft)		1102			583			1013	1013			503
Upstream Blk Time (%)												0
Queuing Penalty (veh)												6
Storage Bay Dist (ft)	110		150	105		105	250			250	300	
Storage Blk Time (%)	22	0	0	0	0	1		10	13			6
Queuing Penalty (veh)	29	1	0	0	0	0		9	3			8

Intersection: 3: Redwood Road & Commerce Drive, All Intervals

Movement	SB	SB
Directions Served	T	R
Maximum Queue (ft)	506	250
Average Queue (ft)	303	130
95th Queue (ft)	497	311
Link Distance (ft)	503	
Upstream Blk Time (%)	1	
Queuing Penalty (veh)	10	
Storage Bay Dist (ft)		150
Storage Blk Time (%)	20	0
Queuing Penalty (veh)	74	0

Intersection: 11: Redwood Road & Aspen Hills Blvd, Interval #1

Movement	EB	WB	WB	WB	NB	NB	NB	SB	SB	SB
Directions Served	LTR	L	T	R	L	T	R	L	T	T
Maximum Queue (ft)	145	190	785	77	57	16	22	264	358	92
Average Queue (ft)	69	187	731	13	24	2	5	174	102	13
95th Queue (ft)	160	198	929	85	65	26	22	289	355	124
Link Distance (ft)	1430		773			1043			1506	1506
Upstream Blk Time (%)			79							
Queuing Penalty (veh)			0							
Storage Bay Dist (ft)		100		100	100		150	150		
Storage Blk Time (%)		100		2	0	0		28	0	
Queuing Penalty (veh)		265		3	2	0		331	1	

Intersection: 11: Redwood Road & Aspen Hills Blvd, Interval #2

Movement	EB	WB	WB	WB	NB	NB	NB	NB	SB	SB	SB
Directions Served	LTR	L	T	R	L	T	T	R	L	T	T
Maximum Queue (ft)	328	189	777	1	78	39	5	19	227	309	206
Average Queue (ft)	243	188	777	0	43	10	1	4	132	53	32
95th Queue (ft)	379	199	803	3	103	67	11	18	231	364	333
Link Distance (ft)	1430		773			1043	1043			1506	1506
Upstream Blk Time (%)			100							0	0
Queuing Penalty (veh)			0							0	0
Storage Bay Dist (ft)		100		100	100			150	150		
Storage Blk Time (%)		100			8	0			16	0	
Queuing Penalty (veh)		284			57	0			199	1	

Intersection: 11: Redwood Road & Aspen Hills Blvd, Interval #3

Movement	EB	WB	WB	NB	NB	NB	NB	SB	SB	SB	SB
Directions Served	LTR	L	T	L	T	T	R	L	T	T	R
Maximum Queue (ft)	503	187	776	99	43	24	17	241	349	205	1
Average Queue (ft)	422	187	776	72	6	4	5	166	138	73	0
95th Queue (ft)	589	198	803	176	66	52	19	297	499	430	2
Link Distance (ft)	1430		773		1043	1043			1506	1506	
Upstream Blk Time (%)			100								
Queuing Penalty (veh)			0								
Storage Bay Dist (ft)		100		100			150	150			200
Storage Blk Time (%)		100		23				26	0		
Queuing Penalty (veh)		265		160				313	1		

Intersection: 11: Redwood Road & Aspen Hills Blvd, Interval #4

Movement	EB	WB	WB	NB	NB	NB	SB	SB	SB	SB
Directions Served	LTR	L	T	L	T	R	L	T	T	R
Maximum Queue (ft)	676	187	776	79	13	26	249	536	397	1
Average Queue (ft)	588	187	776	42	2	6	163	200	153	0
95th Queue (ft)	772	198	803	89	22	24	297	856	809	2
Link Distance (ft)	1430		773		1043			1506	1506	
Upstream Blk Time (%)			100					0	0	
Queuing Penalty (veh)			0					0	1	
Storage Bay Dist (ft)		100		100		150	150			200
Storage Blk Time (%)		100		4	0		26	0		
Queuing Penalty (veh)		265		26	0		313	0		

Intersection: 11: Redwood Road & Aspen Hills Blvd, All Intervals

Movement	EB	WB	WB	WB	NB	NB	NB	NB	SB	SB	SB	SB
Directions Served	LTR	L	T	R	L	T	T	R	L	T	T	R
Maximum Queue (ft)	677	190	788	77	111	84	30	30	278	851	734	2
Average Queue (ft)	330	187	765	3	45	5	1	5	158	123	68	0
95th Queue (ft)	684	198	872	40	118	50	26	21	282	557	484	1
Link Distance (ft)	1430		773			1043	1043			1506	1506	
Upstream Blk Time (%)			95							0	0	
Queuing Penalty (veh)			0							0	0	
Storage Bay Dist (ft)		100		100	100			150	150			200
Storage Blk Time (%)		100		0	9	0			24	0		
Queuing Penalty (veh)		270		1	61	0			289	1		

Intersection: 13: Redwood Road & Sergeant Court Drive, Interval #1

Movement	EB	EB	WB	WB	NB	NB	NB	SB	SB	SB
Directions Served	LT	R	LT	R	L	T	TR	L	T	T
Maximum Queue (ft)	118	52	649	151	43	26	18	168	100	54
Average Queue (ft)	55	36	483	42	19	4	5	91	20	6
95th Queue (ft)	145	62	809	167	53	42	20	166	107	56
Link Distance (ft)	820		637			503	503		1043	1043
Upstream Blk Time (%)			46							
Queuing Penalty (veh)			0							
Storage Bay Dist (ft)		25		150	50			150		
Storage Blk Time (%)	24	77	88	0	20			4	0	0
Queuing Penalty (veh)	6	4	138	0	143			49	0	0

Intersection: 13: Redwood Road & Sergeant Court Drive, Interval #2

Movement	EB	EB	WB	WB	NB	NB	NB	SB	SB	SB	SB
Directions Served	LT	R	LT	R	L	T	TR	L	T	T	R
Maximum Queue (ft)	202	49	639	25	58	97	83	177	161	120	33
Average Queue (ft)	140	29	637	5	35	33	25	100	33	29	5
95th Queue (ft)	286	58	661	56	93	181	176	189	149	157	53
Link Distance (ft)	820		637			503	503		1043	1043	
Upstream Blk Time (%)			100			0	0				
Queuing Penalty (veh)			0			0	2				
Storage Bay Dist (ft)		25		150	50			150			100
Storage Blk Time (%)	61	76	100		31	0		5	0	2	
Queuing Penalty (veh)	16	4	168		230	0		58	0	0	

Intersection: 13: Redwood Road & Sergeant Court Drive, Interval #3

Movement	EB	EB	WB	WB	NB	NB	NB	SB	SB	SB	SB
Directions Served	LT	R	LT	R	L	T	TR	L	T	T	R
Maximum Queue (ft)	290	37	642	50	69	108	96	185	183	142	25
Average Queue (ft)	231	25	639	7	45	47	40	113	63	48	4
95th Queue (ft)	429	60	661	76	114	247	241	218	293	272	52
Link Distance (ft)	820		637			503	503		1043	1043	
Upstream Blk Time (%)			100			0	0				
Queuing Penalty (veh)			0			1	1				
Storage Bay Dist (ft)		25		150	50			150			100
Storage Blk Time (%)	70	59	100		40	0		6	1	2	
Queuing Penalty (veh)	18	3	157		284	0		72	1	0	

Intersection: 13: Redwood Road & Sergeant Court Drive, Interval #4

Movement	EB	EB	WB	WB	NB	NB	NB	SB	SB	SB	SB
Directions Served	LT	R	LT	R	L	T	TR	L	T	T	R
Maximum Queue (ft)	337	31	642	75	58	34	14	164	99	58	27
Average Queue (ft)	284	21	641	15	29	8	4	96	22	17	4
95th Queue (ft)	538	57	663	110	78	50	17	174	115	105	52
Link Distance (ft)	820		637			503	503		1043	1043	
Upstream Blk Time (%)			100								
Queuing Penalty (veh)			0								
Storage Bay Dist (ft)		25		150	50			150			100
Storage Blk Time (%)	76	44	100		31	0		3	0	1	
Queuing Penalty (veh)	20	2	157		218	0		33	1	0	

Intersection: 13: Redwood Road & Sergeant Court Drive, All Intervals

Movement	EB	EB	WB	WB	NB	NB	NB	SB	SB	SB	SB
Directions Served	LT	R	LT	R	L	T	TR	L	T	T	R
Maximum Queue (ft)	361	52	651	189	83	152	118	234	262	243	80
Average Queue (ft)	177	28	600	17	32	23	18	100	34	25	3
95th Queue (ft)	410	61	798	110	88	154	147	189	181	166	45
Link Distance (ft)	820		637			503	503		1043	1043	
Upstream Blk Time (%)			87			0	0				
Queuing Penalty (veh)			0			0	1				
Storage Bay Dist (ft)		25		150	50			150			100
Storage Blk Time (%)	58	64	97	0	31	0		4	0	1	
Queuing Penalty (veh)	15	3	155	0	219	0		53	1	0	

Intersection: 19: 3600 West & 2100 North WB, Interval #1

Movement	WB	NB	SB
Directions Served	L	LT	TR
Maximum Queue (ft)	3	68	30
Average Queue (ft)	1	33	14
95th Queue (ft)	7	78	34
Link Distance (ft)	95	255	760
Upstream Blk Time (%)			
Queuing Penalty (veh)			
Storage Bay Dist (ft)			
Storage Blk Time (%)			
Queuing Penalty (veh)			

Intersection: 19: 3600 West & 2100 North WB, Interval #2

Movement	WB	NB	SB
Directions Served	L	LT	TR
Maximum Queue (ft)	3	81	32
Average Queue (ft)	1	41	17
95th Queue (ft)	9	83	43
Link Distance (ft)	95	255	760
Upstream Blk Time (%)			
Queuing Penalty (veh)			
Storage Bay Dist (ft)			
Storage Blk Time (%)			
Queuing Penalty (veh)			

Intersection: 19: 3600 West & 2100 North WB, Interval #3

Movement	NB	SB
Directions Served	LT	TR
Maximum Queue (ft)	62	39
Average Queue (ft)	29	14
95th Queue (ft)	65	38
Link Distance (ft)	255	760
Upstream Blk Time (%)		
Queuing Penalty (veh)		
Storage Bay Dist (ft)		
Storage Blk Time (%)		
Queuing Penalty (veh)		

Intersection: 19: 3600 West & 2100 North WB, Interval #4

Movement	WB	NB	SB
Directions Served	L	LT	TR
Maximum Queue (ft)	10	47	47
Average Queue (ft)	2	25	17
95th Queue (ft)	27	63	49
Link Distance (ft)	95	255	760
Upstream Blk Time (%)	0		
Queuing Penalty (veh)	2		
Storage Bay Dist (ft)			
Storage Blk Time (%)			
Queuing Penalty (veh)			

Intersection: 19: 3600 West & 2100 North WB, All Intervals

Movement	WB	NB	SB
Directions Served	L	LT	TR
Maximum Queue (ft)	13	92	54
Average Queue (ft)	1	32	15
95th Queue (ft)	14	74	41
Link Distance (ft)	95	255	760
Upstream Blk Time (%)	0		
Queuing Penalty (veh)	0		
Storage Bay Dist (ft)			
Storage Blk Time (%)			
Queuing Penalty (veh)			

Intersection: 20: 3600 West & 2100 North EB, Interval #1

Movement	EB	EB	NB	NB	SB
Directions Served	T	R	T	R	LT
Maximum Queue (ft)	2	4	46	65	189
Average Queue (ft)	0	1	23	45	110
95th Queue (ft)	4	8	55	73	199
Link Distance (ft)	105	105	2312		255
Upstream Blk Time (%)					0
Queuing Penalty (veh)					1
Storage Bay Dist (ft)				50	
Storage Blk Time (%)			1	5	
Queuing Penalty (veh)			2	2	

Intersection: 20: 3600 West & 2100 North EB, Interval #2

Movement	EB	NB	NB	SB
Directions Served	R	T	R	LT
Maximum Queue (ft)	2	65	70	194
Average Queue (ft)	0	26	49	123
95th Queue (ft)	5	60	77	222
Link Distance (ft)	105	2312		255
Upstream Blk Time (%)				1
Queuing Penalty (veh)				2
Storage Bay Dist (ft)			50	
Storage Blk Time (%)		1	7	
Queuing Penalty (veh)		2	3	

Intersection: 20: 3600 West & 2100 North EB, Interval #3

Movement	NB	NB	SB
Directions Served	T	R	LT
Maximum Queue (ft)	245	72	192
Average Queue (ft)	108	52	108
95th Queue (ft)	449	77	197
Link Distance (ft)	2312		255
Upstream Blk Time (%)			0
Queuing Penalty (veh)			0
Storage Bay Dist (ft)		50	
Storage Blk Time (%)	0	23	
Queuing Penalty (veh)	1	10	

Intersection: 20: 3600 West & 2100 North EB, Interval #4

Movement	EB	NB	NB	SB
Directions Served	R	T	R	LT
Maximum Queue (ft)	4	453	65	169
Average Queue (ft)	1	333	46	107
95th Queue (ft)	6	1402	74	196
Link Distance (ft)	105	2312		255
Upstream Blk Time (%)		1		2
Queuing Penalty (veh)		0		4
Storage Bay Dist (ft)			50	
Storage Blk Time (%)		0	24	
Queuing Penalty (veh)		0	10	

Intersection: 20: 3600 West & 2100 North EB, All Intervals

Movement	EB	EB	NB	NB	SB
Directions Served	T	R	T	R	LT
Maximum Queue (ft)	2	11	480	73	230
Average Queue (ft)	0	0	123	48	112
95th Queue (ft)	2	6	722	76	204
Link Distance (ft)	105	105	2312		255
Upstream Blk Time (%)			0		1
Queuing Penalty (veh)			0		2
Storage Bay Dist (ft)				50	
Storage Blk Time (%)			1	15	
Queuing Penalty (veh)			1	6	

Intersection: 22: 2100 North WB, Interval #1

Movement
Directions Served
Maximum Queue (ft)
Average Queue (ft)
95th Queue (ft)
Link Distance (ft)
Upstream Blk Time (%)
Queuing Penalty (veh)
Storage Bay Dist (ft)
Storage Blk Time (%)
Queuing Penalty (veh)

Intersection: 22: 2100 North WB, Interval #2

Movement
Directions Served
Maximum Queue (ft)
Average Queue (ft)
95th Queue (ft)
Link Distance (ft)
Upstream Blk Time (%)
Queuing Penalty (veh)
Storage Bay Dist (ft)
Storage Blk Time (%)
Queuing Penalty (veh)

Intersection: 22: 2100 North WB, Interval #3

Movement	
Directions Served	
Maximum Queue (ft)	
Average Queue (ft)	
95th Queue (ft)	
Link Distance (ft)	
Upstream Blk Time (%)	
Queuing Penalty (veh)	
Storage Bay Dist (ft)	
Storage Blk Time (%)	
Queuing Penalty (veh)	

Intersection: 22: 2100 North WB, Interval #4

Movement	WB
Directions Served	LT
Maximum Queue (ft)	3
Average Queue (ft)	0
95th Queue (ft)	6
Link Distance (ft)	
Upstream Blk Time (%)	
Queuing Penalty (veh)	
Storage Bay Dist (ft)	100
Storage Blk Time (%)	
Queuing Penalty (veh)	

Intersection: 22: 2100 North WB, All Intervals

Movement	WB
Directions Served	LT
Maximum Queue (ft)	3
Average Queue (ft)	0
95th Queue (ft)	3
Link Distance (ft)	
Upstream Blk Time (%)	
Queuing Penalty (veh)	
Storage Bay Dist (ft)	100
Storage Blk Time (%)	
Queuing Penalty (veh)	

Intersection: 23: 2100 North EB, Interval #1

Movement	SE
Directions Served	L
Maximum Queue (ft)	15
Average Queue (ft)	3
95th Queue (ft)	19
Link Distance (ft)	271
Upstream Blk Time (%)	
Queuing Penalty (veh)	
Storage Bay Dist (ft)	
Storage Blk Time (%)	
Queuing Penalty (veh)	

Intersection: 23: 2100 North EB, Interval #2

Movement	SE
Directions Served	L
Maximum Queue (ft)	15
Average Queue (ft)	2
95th Queue (ft)	16
Link Distance (ft)	271
Upstream Blk Time (%)	
Queuing Penalty (veh)	
Storage Bay Dist (ft)	
Storage Blk Time (%)	
Queuing Penalty (veh)	

Intersection: 23: 2100 North EB, Interval #3

Movement	SE
Directions Served	L
Maximum Queue (ft)	15
Average Queue (ft)	3
95th Queue (ft)	18
Link Distance (ft)	271
Upstream Blk Time (%)	
Queuing Penalty (veh)	
Storage Bay Dist (ft)	
Storage Blk Time (%)	
Queuing Penalty (veh)	

Intersection: 23: 2100 North EB, Interval #4

Movement	SE
Directions Served	L
Maximum Queue (ft)	18
Average Queue (ft)	4
95th Queue (ft)	21
Link Distance (ft)	271
Upstream Blk Time (%)	
Queuing Penalty (veh)	
Storage Bay Dist (ft)	
Storage Blk Time (%)	
Queuing Penalty (veh)	

Intersection: 23: 2100 North EB, All Intervals

Movement	SE
Directions Served	L
Maximum Queue (ft)	30
Average Queue (ft)	3
95th Queue (ft)	18
Link Distance (ft)	271
Upstream Blk Time (%)	
Queuing Penalty (veh)	
Storage Bay Dist (ft)	
Storage Blk Time (%)	
Queuing Penalty (veh)	

Intersection: 24: 2100 North EB, Interval #1

Movement
Directions Served
Maximum Queue (ft)
Average Queue (ft)
95th Queue (ft)
Link Distance (ft)
Upstream Blk Time (%)
Queuing Penalty (veh)
Storage Bay Dist (ft)
Storage Blk Time (%)
Queuing Penalty (veh)

Intersection: 24: 2100 North EB, Interval #2

Movement
Directions Served
Maximum Queue (ft)
Average Queue (ft)
95th Queue (ft)
Link Distance (ft)
Upstream Blk Time (%)
Queuing Penalty (veh)
Storage Bay Dist (ft)
Storage Blk Time (%)
Queuing Penalty (veh)

Intersection: 24: 2100 North EB, Interval #3

Movement
Directions Served
Maximum Queue (ft)
Average Queue (ft)
95th Queue (ft)
Link Distance (ft)
Upstream Blk Time (%)
Queuing Penalty (veh)
Storage Bay Dist (ft)
Storage Blk Time (%)
Queuing Penalty (veh)

Intersection: 24: 2100 North EB, Interval #4

Movement
Directions Served
Maximum Queue (ft)
Average Queue (ft)
95th Queue (ft)
Link Distance (ft)
Upstream Blk Time (%)
Queuing Penalty (veh)
Storage Bay Dist (ft)
Storage Blk Time (%)
Queuing Penalty (veh)

Intersection: 24: 2100 North EB, All Intervals

Movement
Directions Served
Maximum Queue (ft)
Average Queue (ft)
95th Queue (ft)
Link Distance (ft)
Upstream Blk Time (%)
Queuing Penalty (veh)
Storage Bay Dist (ft)
Storage Blk Time (%)
Queuing Penalty (veh)

Intersection: 25: 2100 North WB, Interval #1

Movement	NW
Directions Served	L
Maximum Queue (ft)	3
Average Queue (ft)	0
95th Queue (ft)	0
Link Distance (ft)	273
Upstream Blk Time (%)	
Queuing Penalty (veh)	
Storage Bay Dist (ft)	
Storage Blk Time (%)	
Queuing Penalty (veh)	

Intersection: 25: 2100 North WB, Interval #2

Movement	NW
Directions Served	L
Maximum Queue (ft)	4
Average Queue (ft)	1
95th Queue (ft)	7
Link Distance (ft)	273
Upstream Blk Time (%)	
Queuing Penalty (veh)	
Storage Bay Dist (ft)	
Storage Blk Time (%)	
Queuing Penalty (veh)	

Intersection: 25: 2100 North WB, Interval #3

Movement	NW
Directions Served	L
Maximum Queue (ft)	6
Average Queue (ft)	1
95th Queue (ft)	9
Link Distance (ft)	273
Upstream Blk Time (%)	
Queuing Penalty (veh)	
Storage Bay Dist (ft)	
Storage Blk Time (%)	
Queuing Penalty (veh)	

Intersection: 25: 2100 North WB, Interval #4

Movement	NW
Directions Served	L
Maximum Queue (ft)	3
Average Queue (ft)	0
95th Queue (ft)	6
Link Distance (ft)	273
Upstream Blk Time (%)	
Queuing Penalty (veh)	
Storage Bay Dist (ft)	
Storage Blk Time (%)	
Queuing Penalty (veh)	

Intersection: 25: 2100 North WB, All Intervals

Movement	NW
Directions Served	L
Maximum Queue (ft)	14
Average Queue (ft)	0
95th Queue (ft)	6
Link Distance (ft)	273
Upstream Blk Time (%)	
Queuing Penalty (veh)	
Storage Bay Dist (ft)	
Storage Blk Time (%)	
Queuing Penalty (veh)	

Intersection: 29: , Interval #1

Movement
Directions Served
Maximum Queue (ft)
Average Queue (ft)
95th Queue (ft)
Link Distance (ft)
Upstream Blk Time (%)
Queuing Penalty (veh)
Storage Bay Dist (ft)
Storage Blk Time (%)
Queuing Penalty (veh)

Intersection: 29: , Interval #2

Movement
Directions Served
Maximum Queue (ft)
Average Queue (ft)
95th Queue (ft)
Link Distance (ft)
Upstream Blk Time (%)
Queuing Penalty (veh)
Storage Bay Dist (ft)
Storage Blk Time (%)
Queuing Penalty (veh)

Intersection: 29: , Interval #3

Movement
Directions Served
Maximum Queue (ft)
Average Queue (ft)
95th Queue (ft)
Link Distance (ft)
Upstream Blk Time (%)
Queuing Penalty (veh)
Storage Bay Dist (ft)
Storage Blk Time (%)
Queuing Penalty (veh)

Intersection: 29: , Interval #4

Movement
Directions Served
Maximum Queue (ft)
Average Queue (ft)
95th Queue (ft)
Link Distance (ft)
Upstream Blk Time (%)
Queuing Penalty (veh)
Storage Bay Dist (ft)
Storage Blk Time (%)
Queuing Penalty (veh)

Intersection: 29: , All Intervals

Movement
Directions Served
Maximum Queue (ft)
Average Queue (ft)
95th Queue (ft)
Link Distance (ft)
Upstream Blk Time (%)
Queuing Penalty (veh)
Storage Bay Dist (ft)
Storage Blk Time (%)
Queuing Penalty (veh)

Intersection: 31: 400 East & Crossroads Blvd, Interval #1

Movement	EB	WB	NB	SB
Directions Served	LT	LT	LTR	LTR
Maximum Queue (ft)	126	60	30	96
Average Queue (ft)	32	15	14	43
95th Queue (ft)	122	54	36	94
Link Distance (ft)	662	1678	460	746
Upstream Blk Time (%)				
Queuing Penalty (veh)				
Storage Bay Dist (ft)				
Storage Blk Time (%)	0	0		
Queuing Penalty (veh)	0	0		

Intersection: 31: 400 East & Crossroads Blvd, Interval #2

Movement	EB	WB	NB	SB
Directions Served	LT	LT	LTR	LTR
Maximum Queue (ft)	114	146	29	95
Average Queue (ft)	32	39	16	51
95th Queue (ft)	106	137	37	116
Link Distance (ft)	662	1678	460	746
Upstream Blk Time (%)				
Queuing Penalty (veh)				
Storage Bay Dist (ft)				
Storage Blk Time (%)	0	2		
Queuing Penalty (veh)	0	1		

Intersection: 31: 400 East & Crossroads Blvd, Interval #3

Movement	EB	WB	WB	NB	SB
Directions Served	LT	LT	R	LTR	LTR
Maximum Queue (ft)	131	112	31	30	100
Average Queue (ft)	39	33	4	14	51
95th Queue (ft)	126	129	61	36	102
Link Distance (ft)	662	1678		460	746
Upstream Blk Time (%)					
Queuing Penalty (veh)					
Storage Bay Dist (ft)			100		
Storage Blk Time (%)	1	1			
Queuing Penalty (veh)	0	0			

Intersection: 31: 400 East & Crossroads Blvd, Interval #4

Movement	EB	WB	WB	NB	SB
Directions Served	LT	LT	R	LTR	LTR
Maximum Queue (ft)	150	135	30	40	93
Average Queue (ft)	41	27	4	16	46
95th Queue (ft)	153	149	63	40	96
Link Distance (ft)	662	1678		460	746
Upstream Blk Time (%)					
Queuing Penalty (veh)					
Storage Bay Dist (ft)			100		
Storage Blk Time (%)	1	1			
Queuing Penalty (veh)	0	0			

Intersection: 31: 400 East & Crossroads Blvd, All Intervals

Movement	EB	WB	WB	NB	SB
Directions Served	LT	LT	R	LTR	LTR
Maximum Queue (ft)	244	228	61	51	136
Average Queue (ft)	36	28	2	15	48
95th Queue (ft)	128	123	43	37	103
Link Distance (ft)	662	1678		460	746
Upstream Blk Time (%)					
Queuing Penalty (veh)					
Storage Bay Dist (ft)			100		
Storage Blk Time (%)	1	1			
Queuing Penalty (veh)	0	0			

Intersection: 34: Crossroads Blvd, Interval #1

Movement	NB
Directions Served	R
Maximum Queue (ft)	4
Average Queue (ft)	1
95th Queue (ft)	6
Link Distance (ft)	242
Upstream Blk Time (%)	
Queuing Penalty (veh)	
Storage Bay Dist (ft)	
Storage Blk Time (%)	
Queuing Penalty (veh)	

Intersection: 34: Crossroads Blvd, Interval #2

Movement	NB
Directions Served	R
Maximum Queue (ft)	4
Average Queue (ft)	0
95th Queue (ft)	4
Link Distance (ft)	242
Upstream Blk Time (%)	
Queuing Penalty (veh)	
Storage Bay Dist (ft)	
Storage Blk Time (%)	
Queuing Penalty (veh)	

Intersection: 34: Crossroads Blvd, Interval #3

Movement	NB
Directions Served	R
Maximum Queue (ft)	7
Average Queue (ft)	1
95th Queue (ft)	8
Link Distance (ft)	242
Upstream Blk Time (%)	
Queuing Penalty (veh)	
Storage Bay Dist (ft)	
Storage Blk Time (%)	
Queuing Penalty (veh)	

Intersection: 34: Crossroads Blvd, Interval #4

Movement	NB
Directions Served	R
Maximum Queue (ft)	4
Average Queue (ft)	1
95th Queue (ft)	8
Link Distance (ft)	242
Upstream Blk Time (%)	
Queuing Penalty (veh)	
Storage Bay Dist (ft)	
Storage Blk Time (%)	
Queuing Penalty (veh)	

Intersection: 34: Crossroads Blvd, All Intervals

Movement	NB
Directions Served	R
Maximum Queue (ft)	15
Average Queue (ft)	1
95th Queue (ft)	7
Link Distance (ft)	242
Upstream Blk Time (%)	
Queuing Penalty (veh)	
Storage Bay Dist (ft)	
Storage Blk Time (%)	
Queuing Penalty (veh)	

Intersection: 38: , Interval #1

Movement	EB	EB	NB	NB	NB	SB	SB	SB
Directions Served	L	R	L	T	T	T	T	R
Maximum Queue (ft)	361	333	180	149	69	318	314	43
Average Queue (ft)	223	204	126	44	16	119	120	8
95th Queue (ft)	392	347	217	159	74	333	331	38
Link Distance (ft)	951	951		1506	1506	2142	2142	
Upstream Blk Time (%)								
Queuing Penalty (veh)								
Storage Bay Dist (ft)			150					150
Storage Blk Time (%)			22	0			5	
Queuing Penalty (veh)			173	0			5	

Intersection: 38: , Interval #2

Movement	EB	EB	NB	NB	NB	SB	SB	SB
Directions Served	L	R	L	T	T	T	T	R
Maximum Queue (ft)	602	537	222	233	100	439	420	64
Average Queue (ft)	480	404	167	81	29	189	178	14
95th Queue (ft)	699	612	282	271	139	460	436	85
Link Distance (ft)	951	951		1506	1506	2142	2142	
Upstream Blk Time (%)								
Queuing Penalty (veh)								
Storage Bay Dist (ft)			150					150
Storage Blk Time (%)			43	0			8	
Queuing Penalty (veh)			352	0			8	

Intersection: 38: , Interval #3

Movement	EB	EB	NB	NB	NB	SB	SB	SB
Directions Served	L	R	L	T	T	T	T	R
Maximum Queue (ft)	816	825	230	310	241	304	301	34
Average Queue (ft)	724	649	193	153	105	156	146	12
95th Queue (ft)	980	1007	331	461	403	347	330	39
Link Distance (ft)	951	951		1506	1506	2142	2142	
Upstream Blk Time (%)	9	4						
Queuing Penalty (veh)	0	0						
Storage Bay Dist (ft)			150					150
Storage Blk Time (%)			56	0			5	
Queuing Penalty (veh)			433	0			5	

Intersection: 38: , Interval #4

Movement	EB	EB	NB	NB	NB	SB	SB	SB
Directions Served	L	R	L	T	T	T	T	R
Maximum Queue (ft)	925	884	232	285	214	416	406	130
Average Queue (ft)	860	760	190	151	104	170	179	35
95th Queue (ft)	1054	1108	350	460	394	440	456	195
Link Distance (ft)	951	951		1506	1506	2142	2142	
Upstream Blk Time (%)	40	18						
Queuing Penalty (veh)	0	0						
Storage Bay Dist (ft)			150					150
Storage Blk Time (%)			56	0			9	
Queuing Penalty (veh)			434	0			9	

Intersection: 38: , All Intervals

Movement	EB	EB	NB	NB	NB	SB	SB	SB
Directions Served	L	R	L	T	T	T	T	R
Maximum Queue (ft)	925	897	264	352	276	505	509	141
Average Queue (ft)	572	504	169	107	63	158	156	17
95th Queue (ft)	1026	958	305	364	291	401	395	109
Link Distance (ft)	951	951		1506	1506	2142	2142	
Upstream Blk Time (%)	12	6						
Queuing Penalty (veh)	0	0						
Storage Bay Dist (ft)			150					150
Storage Blk Time (%)			44	0			7	
Queuing Penalty (veh)			348	0			7	

Network Summary

Network wide Queuing Penalty, Interval #1: 1285
Network wide Queuing Penalty, Interval #2: 1611
Network wide Queuing Penalty, Interval #3: 1906
Network wide Queuing Penalty, Interval #4: 1665
Network wide Queuing Penalty, All Intervals: 1617

HALES ENGINEERING
innovative transportation solutions

SimTraffic LOS Report

Project: Saratoga Springs - Cold Spring Ranch
Analysis Period: *Future (2020) Background*
Time Period: *Evening Peak Hour* **Project #:** *UT16-928*

Intersection: Redwood Road & Crossroads Blvd
Type: Signalized

Approach	Movement	Demand Volume	Volume Served		Delay/Veh (sec)	
			Avg	%	Avg	LOS
NB	L	305	300	98	66.3	*E*
	T	775	792	102	32.9	*C*
	R	160	161	101	4.4	*A*
	Subtotal	1,240	1,253	101	37.2	*D*
SB	L	280	264	94	72.7	*E*
	T	1,408	1,343	95	43.2	*D*
	R	600	576	96	15.1	*B*
	Subtotal	2,288	2,183	95	39.4	*D*
EB	L	390	383	98	51.2	*D*
	T	270	267	99	44.0	*D*
	R	35	34	98	16.4	*B*
	Subtotal	695	684	98	46.7	*D*
WB	L	250	245	98	60.9	*E*
	T	470	466	99	51.0	*D*
	R	140	139	99	13.6	*B*
	Subtotal	860	850	99	47.7	*D*
Total		5,082	4,970	98	41.4	*D*

Intersection: Redwood Road & Commerce Drive
Type: Signalized

Approach	Movement	Demand Volume	Volume Served		Delay/Veh (sec)	
			Avg	%	Avg	LOS
NB	L	100	99	99	67.0	*E*
	T	1,222	1,220	100	26.6	*C*
	R	30	32	108	8.6	*A*
	Subtotal	1,352	1,351	100	29.1	*C*
SB	L	130	121	93	59.1	*E*
	T	2,152	2,039	95	21.3	*C*
	R	395	370	94	13.6	*B*
	Subtotal	2,677	2,530	95	22.0	*C*
EB	L	190	189	99	64.9	*E*
	T	55	56	102	48.9	*D*
	R	110	114	104	22.4	*C*
	Subtotal	355	359	101	48.9	*D*
WB	L	25	26	103	54.6	*D*
	T	35	33	95	45.5	*D*
	R	80	81	101	14.1	*B*
	Subtotal	140	140	100	29.0	*C*
Total		4,525	4,380	97	26.7	*C*

HALES ENGINEERING
innovative transportation solutions

SimTraffic LOS Report

Project: Saratoga Springs - Cold Spring Ranch
Analysis Period: *Future (2020) Background*
Time Period: *Evening Peak Hour* **Project #:** *UT16-928*

Intersection: Redwood Road & Aspen Hills Blvd
Type: Unsignalized

Approach	Movement	Demand Volume	Volume Served		Delay/Veh (sec)	
			Avg	%	Avg	LOS
NB	L	30	28	94	106.7	*F*
	T	1,401	1,391	99	1.1	*A*
	Subtotal	1,431	1,419	99	3.2	*A*
SB	T	2,566	2,447	95	1.9	*A*
	R	75	72	96	0.7	*A*
	Subtotal	2,641	2,519	95	1.9	*A*
EB	L	10	4	40	1077.4	*F*
	R	25	14	55	916.2	*F*
	Subtotal	***35***	***18***	***51***	***952.0***	***F***
Total		4,107	3,956	96	11.0	*B*

Intersection: Redwood Road & Sergeant Court Drive
Type: Unsignalized

Approach	Movement	Demand Volume	Volume Served		Delay/Veh (sec)	
			Avg	%	Avg	LOS
NB	L	20	14	69	518.8	*F*
	T	1,473	1,464	99	4.8	*A*
	Subtotal	1,493	1,478	99	9.7	*A*
SB	T	2,570	2,436	95	3.7	*A*
	R	20	19	94	0.8	*A*
	Subtotal	2,590	2,455	95	3.7	*A*
EB	L	5	2	40	1429.8	*F*
	R	25	19	75	548.5	*F*
	Subtotal	***30***	***21***	***70***	***632.4***	***F***
Total		4,114	3,954	96	12.0	*B*

HALES ENGINEERING

SimTraffic LOS Report

Project: Saratoga Springs - Cold Spring Ranch
Analysis Period: *Future (2020) Background*
Time Period: *Evening Peak Hour* **Project #:** *UT16-928*

Intersection: 3600 West & 2100 North WB
Type: Signalized

Approach	Movement	Demand Volume	Volume Served		Delay/Veh (sec)	
			Avg	%	Avg	LOS
NB	L	20	20	99	91.0	*F*
	T	75	74	98	59.8	*E*
	Subtotal	95	94	99	66.4	*E*
SB	T	1,275	1,275	100	40.5	*D*
	R	150	152	102	25.2	*C*
	Subtotal	1,425	1,427	100	38.9	*D*
WB	L	100	94	94	19.2	*B*
	T	1,500	1,508	101	17.4	*B*
	R	945	945	100	6.2	*A*
	Subtotal	2,545	2,547	100	13.3	*B*
Total		4,065	4,068	100	23.5	*C*

Intersection: 3600 West & 2100 North EB
Type: Signalized

Approach	Movement	Demand Volume	Volume Served		Delay/Veh (sec)	
			Avg	%	Avg	LOS
NB	T	20	20	99	42.7	*D*
	R	85	89	104	29.2	*C*
	Subtotal	105	109	104	31.7	*C*
SB	L	1,275	1,246	98	31.1	*C*
	T	100	117	117	25.4	*C*
	Subtotal	1,375	1,363	99	30.6	*C*
EB	L	75	74	98	35.0	*C*
	T	1,030	1,011	98	28.2	*C*
	R	30	31	104	3.8	*A*
	Subtotal	1,135	1,116	98	28.0	*C*
Total		2,616	2,588	99	29.5	*C*

SimTraffic LOS Report

Project: Saratoga Springs - Cold Spring Ranch
Analysis Period: *Future (2020) Background*
Time Period: *Evening Peak Hour* **Project #:** *UT16-928*

Intersection: 400 East & Crossroads Blvd
Type: Unsignalized

Approach	Movement	Demand Volume	Volume Served		Delay/Veh (sec)	
			Avg	%	Avg	LOS
NB	L	10	8	78	58.3	*F*
	T	5	5	100	46.6	*E*
	R	35	36	104	16.0	*C*
	Subtotal	50	49	98	26.0	*D*
SB	L	25	23	91	55.2	*F*
	T	20	20	99	58.1	*F*
	R	50	48	96	11.3	*B*
	Subtotal	***95***	***91***	***96***	***32.7***	***D***
EB	L	35	33	95	10.9	*B*
	T	640	630	98	3.8	*A*
	R	15	15	98	1.2	*A*
	Subtotal	690	678	98	4.1	*A*
WB	L	60	58	97	9.3	*A*
	T	800	803	100	5.3	*A*
	R	25	26	103	2.4	*A*
	Subtotal	885	887	100	5.5	*A*
Total		1,721	1,705	99	7.0	*A*

2: Redwood Road & Crossroads Blvd Performance by movement Interval #1 5:00

Movement	EBL	EBT	EBR	WBL	WBT	WBR	NBL	NBT	NBR	SBL	SBT	SBR
Denied Delay (hr)	0.1	0.0	0.0	0.0	0.0	0.0	0.1	0.0	0.0	0.0	0.0	0.0
Denied Del/Veh (s)	2.6	0.3	2.9	0.0	0.0	0.0	2.5	0.5	2.5	0.2	0.0	0.0
Total Delay (hr)	1.4	0.8	0.0	1.0	1.8	0.1	1.4	1.8	0.0	1.2	3.4	0.6
Total Del/Veh (s)	50.7	41.7	14.2	55.8	49.4	14.2	60.5	30.9	4.0	64.6	35.2	14.2
Vehicles Entered	94	63	7	58	119	33	73	194	37	60	322	136
Vehicles Exited	95	64	7	59	124	33	76	201	38	58	321	133
Hourly Exit Rate	380	256	28	236	496	132	304	804	152	232	1284	532
Input Volume	383	265	34	246	462	138	300	761	157	275	1383	589
% of Volume	99	97	82	96	107	96	101	106	97	84	93	90

2: Redwood Road & Crossroads Blvd Performance by movement Interval #1 5:00

Movement	All
Denied Delay (hr)	0.2
Denied Del/Veh (s)	0.6
Total Delay (hr)	13.5
Total Del/Veh (s)	37.7
Vehicles Entered	1196
Vehicles Exited	1209
Hourly Exit Rate	4836
Input Volume	4993
% of Volume	97

2: Redwood Road & Crossroads Blvd Performance by movement Interval #2 5:15

Movement	EBL	EBT	EBR	WBL	WBT	WBR	NBL	NBT	NBR	SBL	SBT	SBR
Denied Delay (hr)	0.1	0.0	0.0	0.0	0.0	0.0	0.1	0.0	0.0	0.0	0.0	0.0
Denied Del/Veh (s)	2.5	0.3	2.9	0.0	0.0	0.0	2.5	0.5	2.6	0.2	0.0	0.0
Total Delay (hr)	1.5	0.9	0.1	1.2	1.7	0.2	1.4	1.8	0.1	1.4	3.9	0.7
Total Del/Veh (s)	49.5	43.6	18.1	62.1	51.0	13.9	61.4	30.9	4.4	66.9	39.0	15.4
Vehicles Entered	101	68	10	67	119	39	79	202	43	66	333	147
Vehicles Exited	91	63	10	67	120	39	80	205	43	66	340	150
Hourly Exit Rate	364	252	40	268	480	156	320	820	172	264	1360	600
Input Volume	411	284	37	263	495	147	321	816	168	295	1482	632
% of Volume	89	89	108	102	97	106	100	100	102	89	92	95

2: Redwood Road & Crossroads Blvd Performance by movement Interval #2 5:15

Movement	All
Denied Delay (hr)	0.2
Denied Del/Veh (s)	0.6
Total Delay (hr)	14.7
Total Del/Veh (s)	39.4
Vehicles Entered	1274
Vehicles Exited	1274
Hourly Exit Rate	5096
Input Volume	5351
% of Volume	95

2: Redwood Road & Crossroads Blvd Performance by movement Interval #3 5:30

Movement	EBL	EBT	EBR	WBL	WBT	WBR	NBL	NBT	NBR	SBL	SBT	SBR
Denied Delay (hr)	0.1	0.0	0.0	0.0	0.0	0.0	0.1	0.0	0.0	0.0	0.0	0.0
Denied Del/Veh (s)	2.6	0.3	3.3	0.0	0.0	0.0	2.5	0.5	2.4	0.1	0.0	0.0
Total Delay (hr)	1.4	0.8	0.0	1.0	1.6	0.1	1.5	1.9	0.1	1.5	4.3	0.6
Total Del/Veh (s)	44.5	38.2	17.6	57.5	49.2	13.1	67.1	34.1	4.5	66.2	43.4	14.7
Vehicles Entered	98	71	9	61	115	36	73	190	41	71	336	146
Vehicles Exited	103	71	9	54	102	35	73	197	42	72	339	146
Hourly Exit Rate	412	284	36	216	408	140	292	788	168	288	1356	584
Input Volume	383	265	34	246	462	138	300	761	157	275	1383	589
% of Volume	108	107	106	88	88	101	97	104	107	105	98	99

2: Redwood Road & Crossroads Blvd Performance by movement Interval #3 5:30

Movement	All
Denied Delay (hr)	0.2
Denied Del/Veh (s)	0.6
Total Delay (hr)	14.8
Total Del/Veh (s)	40.1
Vehicles Entered	1247
Vehicles Exited	1243
Hourly Exit Rate	4972
Input Volume	4993
% of Volume	100

2: Redwood Road & Crossroads Blvd Performance by movement Interval #4 5:45

Movement	EBL	EBT	EBR	WBL	WBT	WBR	NBL	NBT	NBR	SBL	SBT	SBR
Denied Delay (hr)	0.1	0.0	0.0	0.0	0.0	0.0	0.1	0.0	0.0	0.0	0.0	0.0
Denied Del/Veh (s)	2.5	0.3	3.2	0.0	0.0	0.0	2.5	0.5	2.4	0.2	0.1	0.0
Total Delay (hr)	1.3	0.9	0.0	1.1	1.7	0.1	1.5	1.7	0.0	1.4	4.9	0.6
Total Del/Veh (s)	45.3	41.3	11.6	55.3	44.9	11.7	64.5	31.4	4.4	68.5	48.4	14.5
Vehicles Entered	93	67	8	63	118	32	77	192	40	66	346	148
Vehicles Exited	94	69	8	64	121	32	70	189	39	68	343	147
Hourly Exit Rate	376	276	32	256	484	128	280	756	156	272	1372	588
Input Volume	383	265	34	246	462	138	300	761	157	275	1383	589
% of Volume	98	104	94	104	105	93	93	99	99	99	99	100

2: Redwood Road & Crossroads Blvd Performance by movement Interval #4 5:45

Movement	All
Denied Delay (hr)	0.2
Denied Del/Veh (s)	0.6
Total Delay (hr)	15.2
Total Del/Veh (s)	40.9
Vehicles Entered	1250
Vehicles Exited	1244
Hourly Exit Rate	4976
Input Volume	4993
% of Volume	100

2: Redwood Road & Crossroads Blvd Performance by movement Entire Run

Movement	EBL	EBT	EBR	WBL	WBT	WBR	NBL	NBT	NBR	SBL	SBT	SBR
Denied Delay (hr)	0.3	0.0	0.0	0.0	0.0	0.0	0.2	0.1	0.1	0.0	0.0	0.0
Denied Del/Veh (s)	2.6	0.3	3.1	0.0	0.0	0.0	2.5	0.5	2.5	0.2	0.0	0.0
Total Delay (hr)	5.6	3.3	0.2	4.3	6.8	0.5	5.7	7.3	0.2	5.5	16.3	2.4
Total Del/Veh (s)	51.2	44.0	16.4	60.9	51.0	13.6	66.3	32.9	4.4	72.7	43.2	15.1
Vehicles Entered	386	270	34	249	470	140	303	778	161	263	1338	578
Vehicles Exited	383	267	34	245	466	139	300	792	161	264	1343	576
Hourly Exit Rate	383	267	34	245	466	139	300	792	161	264	1343	576
Input Volume	390	270	35	250	470	140	305	775	160	280	1408	600
% of Volume	98	99	98	98	99	99	98	102	101	94	95	96

2: Redwood Road & Crossroads Blvd Performance by movement Entire Run

Movement	All
Denied Delay (hr)	0.8
Denied Del/Veh (s)	0.6
Total Delay (hr)	58.2
Total Del/Veh (s)	41.4
Vehicles Entered	4970
Vehicles Exited	4970
Hourly Exit Rate	4970
Input Volume	5082
% of Volume	98

3: Redwood Road & Commerce Drive Performance by movement Interval #1 5:00

Movement	EBL	EBT	EBR	WBL	WBT	WBR	NBL	NBT	NBR	SBL	SBT	SBR
Denied Delay (hr)	0.0	0.0	0.0	0.0	0.0	0.0	0.0	0.0	0.0	0.0	0.1	0.0
Denied Del/Veh (s)	2.7	0.5	2.7	4.1	0.4	4.0	0.1	0.0	0.1	0.0	0.5	0.1
Total Delay (hr)	0.9	0.2	0.2	0.1	0.1	0.1	0.5	2.1	0.0	0.6	2.8	0.3
Total Del/Veh (s)	64.0	43.6	19.7	49.0	40.3	12.1	68.3	24.4	8.2	59.5	19.5	12.1
Vehicles Entered	45	15	28	6	9	18	25	309	7	32	500	90
Vehicles Exited	49	15	27	7	9	18	27	295	7	33	484	88
Hourly Exit Rate	196	60	108	28	36	72	108	1180	28	132	1936	352
Input Volume	187	54	108	25	34	79	98	1201	29	128	2115	388
% of Volume	105	111	100	112	106	91	110	98	97	103	92	91

3: Redwood Road & Commerce Drive Performance by movement Interval #1 5:00

Movement	All
Denied Delay (hr)	0.2
Denied Del/Veh (s)	0.5
Total Delay (hr)	7.9
Total Del/Veh (s)	25.3
Vehicles Entered	1084
Vehicles Exited	1059
Hourly Exit Rate	4236
Input Volume	4446
% of Volume	95

3: Redwood Road & Commerce Drive Performance by movement Interval #2 5:15

Movement	EBL	EBT	EBR	WBL	WBT	WBR	NBL	NBT	NBR	SBL	SBT	SBR
Denied Delay (hr)	0.0	0.0	0.0	0.0	0.0	0.0	0.0	0.0	0.0	0.0	0.1	0.0
Denied Del/Veh (s)	2.8	0.7	2.7	3.7	0.3	3.9	0.0	0.0	0.1	0.1	0.7	1.0
Total Delay (hr)	1.0	0.2	0.2	0.1	0.1	0.1	0.5	2.3	0.0	0.5	3.0	0.4
Total Del/Veh (s)	63.3	48.1	21.1	58.3	48.2	14.9	65.8	24.9	9.9	58.8	20.0	13.4
Vehicles Entered	51	14	31	7	8	21	24	313	8	32	516	100
Vehicles Exited	52	14	31	7	9	21	23	309	8	28	510	100
Hourly Exit Rate	208	56	124	28	36	84	92	1236	32	112	2040	400
Input Volume	200	58	116	26	37	84	105	1287	32	137	2265	416
% of Volume	104	97	107	108	97	100	88	96	100	82	90	96

3: Redwood Road & Commerce Drive Performance by movement Interval #2 5:15

Movement	All
Denied Delay (hr)	0.2
Denied Del/Veh (s)	0.7
Total Delay (hr)	8.4
Total Del/Veh (s)	25.5
Vehicles Entered	1125
Vehicles Exited	1112
Hourly Exit Rate	4448
Input Volume	4763
% of Volume	93

3: Redwood Road & Commerce Drive Performance by movement Interval #3 5:30

Movement	EBL	EBT	EBR	WBL	WBT	WBR	NBL	NBT	NBR	SBL	SBT	SBR
Denied Delay (hr)	0.0	0.0	0.0	0.0	0.0	0.0	0.0	0.0	0.0	0.0	0.1	0.0
Denied Del/Veh (s)	2.7	0.8	2.5	3.9	0.6	4.0	0.1	0.0	0.1	0.4	0.8	0.6
Total Delay (hr)	0.8	0.2	0.2	0.1	0.1	0.1	0.5	2.4	0.0	0.5	3.3	0.4
Total Del/Veh (s)	58.0	48.9	24.3	49.6	41.7	15.4	61.3	26.2	7.5	51.1	21.8	14.2
Vehicles Entered	46	14	29	7	7	20	27	311	8	29	509	93
Vehicles Exited	44	14	29	6	7	20	26	321	8	29	520	92
Hourly Exit Rate	176	56	116	24	28	80	104	1284	32	116	2080	368
Input Volume	187	54	108	25	34	79	98	1201	29	128	2115	388
% of Volume	94	104	107	96	82	101	106	107	110	91	98	95

3: Redwood Road & Commerce Drive Performance by movement Interval #3 5:30

Movement	All
Denied Delay (hr)	0.2
Denied Del/Veh (s)	0.7
Total Delay (hr)	8.6
Total Del/Veh (s)	26.3
Vehicles Entered	1100
Vehicles Exited	1116
Hourly Exit Rate	4464
Input Volume	4446
% of Volume	100

3: Redwood Road & Commerce Drive Performance by movement Interval #4 5:45

Movement	EBL	EBT	EBR	WBL	WBT	WBR	NBL	NBT	NBR	SBL	SBT	SBR
Denied Delay (hr)	0.0	0.0	0.0	0.0	0.0	0.0	0.0	0.0	0.0	0.0	0.1	0.0
Denied Del/Veh (s)	2.9	0.8	2.7	4.0	0.4	3.8	0.0	0.0	0.1	0.0	0.6	0.4
Total Delay (hr)	0.8	0.2	0.2	0.1	0.1	0.1	0.5	2.2	0.0	0.5	3.1	0.3
Total Del/Veh (s)	58.0	45.6	20.1	53.5	41.8	11.9	58.2	25.7	8.7	53.0	20.9	13.2
Vehicles Entered	46	14	27	6	9	22	24	294	8	30	517	89
Vehicles Exited	45	13	27	6	8	22	24	295	8	31	524	90
Hourly Exit Rate	180	52	108	24	32	88	96	1180	32	124	2096	360
Input Volume	187	54	108	25	34	79	98	1201	29	128	2115	388
% of Volume	96	96	100	96	94	111	98	98	110	97	99	93

3: Redwood Road & Commerce Drive Performance by movement Interval #4 5:45

Movement	All
Denied Delay (hr)	0.2
Denied Del/Veh (s)	0.6
Total Delay (hr)	8.1
Total Del/Veh (s)	25.5
Vehicles Entered	1086
Vehicles Exited	1093
Hourly Exit Rate	4372
Input Volume	4446
% of Volume	98

3: Redwood Road & Commerce Drive Performance by movement Entire Run

Movement	EBL	EBT	EBR	WBL	WBT	WBR	NBL	NBT	NBR	SBL	SBT	SBR
Denied Delay (hr)	0.1	0.0	0.1	0.0	0.0	0.1	0.0	0.0	0.0	0.0	0.4	0.1
Denied Del/Veh (s)	2.8	0.7	2.6	3.9	0.4	3.9	0.1	0.0	0.1	0.1	0.6	0.5
Total Delay (hr)	3.5	0.8	0.7	0.4	0.4	0.3	1.9	9.1	0.1	2.1	12.1	1.4
Total Del/Veh (s)	64.9	48.9	22.4	54.6	45.5	14.1	67.0	26.6	8.6	59.1	21.3	13.6
Vehicles Entered	189	57	115	26	34	81	101	1227	32	123	2041	371
Vehicles Exited	189	56	114	26	33	81	99	1220	32	121	2039	370
Hourly Exit Rate	189	56	114	26	33	81	99	1220	32	121	2039	370
Input Volume	190	55	110	25	35	80	100	1222	30	130	2152	395
% of Volume	99	102	104	103	95	101	99	100	108	93	95	94

3: Redwood Road & Commerce Drive Performance by movement Entire Run

Movement	All
Denied Delay (hr)	0.8
Denied Del/Veh (s)	0.6
Total Delay (hr)	32.9
Total Del/Veh (s)	26.7
Vehicles Entered	4397
Vehicles Exited	4380
Hourly Exit Rate	4380
Input Volume	4525
% of Volume	97

11: Redwood Road & Aspen Hills Blvd Performance by movement Interval #1 5:00

Movement	EBL	EBR	NBL	NBT	SBT	SBR	All
Denied Delay (hr)	0.0	0.0	0.0	0.0	0.0	0.0	0.0
Denied Del/Veh (s)	0.2	0.2	0.1	0.0	0.0	0.0	0.0
Total Delay (hr)	0.2	0.3	0.2	0.1	0.3	0.0	1.1
Total Del/Veh (s)	247.7	142.0	71.2	1.1	1.8	0.7	3.9
Vehicles Entered	2	6	8	331	600	19	966
Vehicles Exited	1	4	8	336	601	18	968
Hourly Exit Rate	4	16	32	1344	2404	72	3872
Input Volume	10	25	29	1377	2521	74	4036
% of Volume	40	64	110	98	95	97	96

11: Redwood Road & Aspen Hills Blvd Performance by movement Interval #2 5:15

Movement	EBL	EBR	NBL	NBT	SBT	SBR	All
Denied Delay (hr)	0.0	0.0	0.0	0.0	0.0	0.0	0.0
Denied Del/Veh (s)	0.1	0.2	0.0	0.0	0.0	0.0	0.0
Total Delay (hr)	0.5	1.3	0.3	0.1	0.3	0.0	2.6
Total Del/Veh (s)	467.1	440.2	110.5	1.2	1.9	0.7	9.1
Vehicles Entered	2	8	8	361	617	18	1014
Vehicles Exited	0	3	8	358	617	18	1004
Hourly Exit Rate	0	12	32	1432	2468	72	4016
Input Volume	10	26	32	1474	2700	79	4321
% of Volume	0	46	100	97	91	91	93

11: Redwood Road & Aspen Hills Blvd Performance by movement Interval #3 5:30

Movement	EBL	EBR	NBL	NBT	SBT	SBR	All
Denied Delay (hr)	0.0	0.0	0.0	0.0	0.0	0.0	0.0
Denied Del/Veh (s)	0.1	0.2	0.0	0.0	0.0	0.0	0.0
Total Delay (hr)	1.0	2.3	0.2	0.1	0.3	0.0	4.0
Total Del/Veh (s)	594.8	592.7	111.5	1.0	2.0	0.8	13.9
Vehicles Entered	3	6	6	363	610	18	1006
Vehicles Exited	1	3	7	362	614	18	1005
Hourly Exit Rate	4	12	28	1448	2456	72	4020
Input Volume	10	25	29	1377	2521	74	4036
% of Volume	40	48	97	105	97	97	100

11: Redwood Road & Aspen Hills Blvd Performance by movement Interval #4 5:45

Movement	EBL	EBR	NBL	NBT	SBT	SBR	All
Denied Delay (hr)	0.0	0.0	0.0	0.0	0.0	0.0	0.0
Denied Del/Veh (s)	0.1	0.1	0.0	0.0	0.0	0.0	0.0
Total Delay (hr)	1.3	2.7	0.2	0.1	0.3	0.0	4.6
Total Del/Veh (s)	656.2	569.8	91.1	1.0	1.9	0.7	16.3
Vehicles Entered	3	6	6	336	620	18	989
Vehicles Exited	1	4	6	335	616	18	980
Hourly Exit Rate	4	16	24	1340	2464	72	3920
Input Volume	10	25	29	1377	2521	74	4036
% of Volume	40	64	83	97	98	97	97

11: Redwood Road & Aspen Hills Blvd Performance by movement Entire Run

Movement	EBL	EBR	NBL	NBT	SBT	SBR	All
Denied Delay (hr)	0.0	0.0	0.0	0.0	0.0	0.0	0.0
Denied Del/Veh (s)	0.1	0.2	0.0	0.0	0.0	0.0	0.0
Total Delay (hr)	3.0	6.6	0.9	0.4	1.3	0.0	12.2
Total Del/Veh (s)	1077.4	916.2	106.7	1.1	1.9	0.7	11.0
Vehicles Entered	10	26	28	1391	2447	73	3975
Vehicles Exited	4	14	28	1391	2447	72	3956
Hourly Exit Rate	4	14	28	1391	2447	72	3956
Input Volume	10	25	30	1401	2566	75	4107
% of Volume	40	55	94	99	95	96	96

13: Redwood Road & Sergeant Court Drive Performance by movement Interval #1 5:00

Movement	EBL	EBR	NBL	NBT	SBT	SBR	All
Denied Delay (hr)	0.0	0.0	0.0	0.0	0.0	0.0	0.0
Denied Del/Veh (s)	3.2	0.1	0.1	0.0	0.0	0.0	0.0
Total Delay (hr)	0.1	0.3	0.3	0.3	0.5	0.0	1.6
Total Del/Veh (s)	250.3	157.1	199.7	3.4	2.7	0.5	5.9
Vehicles Entered	2	7	6	353	598	5	971
Vehicles Exited	0	6	3	350	596	5	960
Hourly Exit Rate	0	24	12	1400	2384	20	3840
Input Volume	5	25	20	1447	2525	20	4042
% of Volume	0	96	60	97	94	100	95

13: Redwood Road & Sergeant Court Drive Performance by movement Interval #2 5:15

Movement	EBL	EBR	NBL	NBT	SBT	SBR	All
Denied Delay (hr)	0.0	0.0	0.0	0.0	0.0	0.0	0.0
Denied Del/Veh (s)	4.6	0.1	0.2	0.0	0.0	0.0	0.0
Total Delay (hr)	0.5	0.7	0.7	0.5	0.6	0.0	3.0
Total Del/Veh (s)	839.3	316.2	397.5	5.0	3.5	0.6	10.4
Vehicles Entered	1	7	4	377	618	6	1013
Vehicles Exited	0	5	3	382	620	6	1016
Hourly Exit Rate	0	20	12	1528	2480	24	4064
Input Volume	5	26	21	1550	2706	21	4329
% of Volume	0	77	57	99	92	114	94

13: Redwood Road & Sergeant Court Drive Performance by movement Interval #3 5:30

Movement	EBL	EBR	NBL	NBT	SBT	SBR	All
Denied Delay (hr)	0.0	0.0	0.0	0.0	0.0	0.0	0.0
Denied Del/Veh (s)	5.0	0.1	0.2	0.0	0.0	0.0	0.0
Total Delay (hr)	0.6	1.3	0.7	0.6	0.8	0.0	4.0
Total Del/Veh (s)	559.6	413.5	356.7	5.4	4.9	1.1	14.1
Vehicles Entered	1	8	4	380	608	5	1006
Vehicles Exited	1	4	5	378	607	5	1000
Hourly Exit Rate	4	16	20	1512	2428	20	4000
Input Volume	5	25	20	1447	2525	20	4042
% of Volume	80	64	100	104	96	100	99

13: Redwood Road & Sergeant Court Drive Performance by movement Interval #4 5:45

Movement	EBL	EBR	NBL	NBT	SBT	SBR	All
Denied Delay (hr)	0.0	0.0	0.0	0.0	0.0	0.0	0.0
Denied Del/Veh (s)	3.4	0.1	0.1	0.1	0.0	0.0	0.0
Total Delay (hr)	0.8	2.0	0.9	0.5	0.6	0.0	4.7
Total Del/Veh (s)	682.8	540.2	407.3	5.0	3.5	0.8	16.8
Vehicles Entered	1	6	5	356	614	4	986
Vehicles Exited	0	4	3	355	614	4	980
Hourly Exit Rate	0	16	12	1420	2456	16	3920
Input Volume	5	25	20	1447	2525	20	4042
% of Volume	0	64	60	98	97	80	97

13: Redwood Road & Sergeant Court Drive Performance by movement Entire Run

Movement	EBL	EBR	NBL	NBT	SBT	SBR	All
Denied Delay (hr)	0.0	0.0	0.0	0.0	0.0	0.0	0.0
Denied Del/Veh (s)	3.9	0.1	0.2	0.0	0.0	0.0	0.0
Total Delay (hr)	2.0	4.3	2.6	2.0	2.5	0.0	13.3
Total Del/Veh (s)	1429.8	548.5	518.8	4.8	3.7	0.8	12.0
Vehicles Entered	5	27	18	1465	2438	19	3972
Vehicles Exited	2	19	14	1464	2436	19	3954
Hourly Exit Rate	2	19	14	1464	2436	19	3954
Input Volume	5	25	20	1473	2570	20	4114
% of Volume	40	75	69	99	95	94	96

19: 3600 West & 2100 North WB Performance by movement Interval #1 5:00

Movement	WBL	WBT	WBR	NBL	NBT	SBT	SBR	All
Denied Delay (hr)	0.0	0.0	0.0	0.0	0.0	0.0	0.0	0.1
Denied Del/Veh (s)	0.0	0.0	0.0	0.0	0.0	0.4	2.2	0.2
Total Delay (hr)	0.1	1.6	0.3	0.1	0.3	3.6	0.3	6.4
Total Del/Veh (s)	17.3	15.0	5.4	72.4	54.4	40.1	24.8	22.2
Vehicles Entered	25	379	224	4	20	313	40	1005
Vehicles Exited	26	388	226	4	18	293	38	993
Hourly Exit Rate	104	1552	904	16	72	1172	152	3972
Input Volume	98	1474	928	20	74	1253	147	3994
% of Volume	106	105	97	80	97	94	103	99

19: 3600 West & 2100 North WB Performance by movement Interval #2 5:15

Movement	WBL	WBT	WBR	NBL	NBT	SBT	SBR	All
Denied Delay (hr)	0.0	0.0	0.0	0.0	0.0	0.0	0.0	0.1
Denied Del/Veh (s)	0.0	0.0	0.0	0.0	0.0	0.4	2.3	0.2
Total Delay (hr)	0.1	1.9	0.4	0.2	0.3	3.4	0.3	6.6
Total Del/Veh (s)	18.4	18.8	6.2	96.1	58.7	33.1	22.3	22.2
Vehicles Entered	24	369	242	6	18	337	39	1035
Vehicles Exited	22	361	239	6	20	354	40	1042
Hourly Exit Rate	88	1444	956	24	80	1416	160	4168
Input Volume	105	1579	995	21	79	1342	158	4279
% of Volume	84	91	96	114	101	106	101	97

19: 3600 West & 2100 North WB Performance by movement Interval #3 5:30

Movement	WBL	WBT	WBR	NBL	NBT	SBT	SBR	All
Denied Delay (hr)	0.0	0.0	0.0	0.0	0.0	0.0	0.0	0.1
Denied Del/Veh (s)	0.0	0.0	0.0	0.0	0.0	0.4	2.4	0.2
Total Delay (hr)	0.1	1.9	0.4	0.1	0.3	3.8	0.3	6.9
Total Del/Veh (s)	17.8	16.2	6.5	75.7	54.4	42.0	25.3	23.2
Vehicles Entered	22	405	240	6	20	312	35	1040
Vehicles Exited	23	410	242	5	17	291	35	1023
Hourly Exit Rate	92	1640	968	20	68	1164	140	4092
Input Volume	98	1474	928	20	74	1253	147	3994
% of Volume	94	111	104	100	92	93	95	102

19: 3600 West & 2100 North WB Performance by movement Interval #4 5:45

Movement	WBL	WBT	WBR	NBL	NBT	SBT	SBR	All
Denied Delay (hr)	0.0	0.0	0.0	0.0	0.0	0.0	0.0	0.1
Denied Del/Veh (s)	0.0	0.0	0.0	0.0	0.0	0.4	2.5	0.2
Total Delay (hr)	0.1	1.9	0.4	0.1	0.3	3.7	0.3	6.8
Total Del/Veh (s)	21.0	18.8	6.3	83.3	53.7	37.8	24.0	23.6
Vehicles Entered	24	355	239	5	17	314	39	993
Vehicles Exited	22	349	238	6	20	337	39	1011
Hourly Exit Rate	88	1396	952	24	80	1348	156	4044
Input Volume	98	1474	928	20	74	1253	147	3994
% of Volume	90	95	103	120	108	108	106	101

19: 3600 West & 2100 North WB Performance by movement Entire Run

Movement	WBL	WBT	WBR	NBL	NBT	SBT	SBR	All
Denied Delay (hr)	0.0	0.0	0.0	0.0	0.0	0.1	0.1	0.2
Denied Del/Veh (s)	0.0	0.0	0.0	0.0	0.0	0.4	2.3	0.2
Total Delay (hr)	0.5	7.3	1.6	0.5	1.2	14.5	1.1	26.8
Total Del/Veh (s)	19.2	17.4	6.2	91.0	59.8	40.5	25.2	23.5
Vehicles Entered	94	1507	945	20	74	1276	153	4069
Vehicles Exited	94	1508	945	20	74	1275	152	4068
Hourly Exit Rate	94	1508	945	20	74	1275	152	4068
Input Volume	100	1500	945	20	75	1275	150	4065
% of Volume	94	101	100	99	98	100	102	100

20: 3600 West & 2100 North EB Performance by movement Interval #1 5:00

Movement	EBL	EBT	EBR	NBT	NBR	SBL	SBT	All
Denied Delay (hr)	0.0	0.0	0.0	0.0	0.0	0.0	0.0	0.0
Denied Del/Veh (s)	0.0	0.0	0.0	0.2	1.6	0.0	0.0	0.1
Total Delay (hr)	0.2	1.9	0.0	0.0	0.2	2.7	0.2	5.2
Total Del/Veh (s)	30.4	24.9	3.5	33.9	29.7	32.7	27.3	28.7
Vehicles Entered	19	258	7	4	22	288	31	629
Vehicles Exited	20	264	7	4	22	288	30	635
Hourly Exit Rate	80	1056	28	16	88	1152	120	2540
Input Volume	74	1012	29	20	84	1253	98	2570
% of Volume	108	104	97	80	105	92	122	99

20: 3600 West & 2100 North EB Performance by movement Interval #2 5:15

Movement	EBL	EBT	EBR	NBT	NBR	SBL	SBT	All
Denied Delay (hr)	0.0	0.0	0.0	0.0	0.0	0.0	0.0	0.0
Denied Del/Veh (s)	0.0	0.1	0.0	0.3	1.8	0.0	0.0	0.1
Total Delay (hr)	0.2	2.1	0.0	0.1	0.2	2.6	0.2	5.4
Total Del/Veh (s)	37.5	30.3	3.5	38.8	30.6	26.6	22.7	28.0
Vehicles Entered	20	246	8	5	23	348	29	679
Vehicles Exited	18	240	8	6	25	341	30	668
Hourly Exit Rate	72	960	32	24	100	1364	120	2672
Input Volume	79	1085	32	21	89	1342	105	2753
% of Volume	91	88	100	114	112	102	114	97

20: 3600 West & 2100 North EB Performance by movement Interval #3 5:30

Movement	EBL	EBT	EBR	NBT	NBR	SBL	SBT	All
Denied Delay (hr)	0.0	0.0	0.0	0.0	0.0	0.0	0.0	0.0
Denied Del/Veh (s)	0.0	0.0	0.0	0.2	1.9	0.0	0.0	0.1
Total Delay (hr)	0.2	2.0	0.0	0.1	0.2	2.9	0.2	5.6
Total Del/Veh (s)	33.7	26.1	4.4	42.3	24.4	34.4	26.8	30.0
Vehicles Entered	18	271	8	5	22	286	28	638
Vehicles Exited	21	276	8	4	20	290	28	647
Hourly Exit Rate	84	1104	32	16	80	1160	112	2588
Input Volume	74	1012	29	20	84	1253	98	2570
% of Volume	114	109	110	80	95	93	114	101

20: 3600 West & 2100 North EB Performance by movement Interval #4 5:45

Movement	EBL	EBT	EBR	NBT	NBR	SBL	SBT	All
Denied Delay (hr)	0.0	0.0	0.0	0.0	0.0	0.0	0.0	0.0
Denied Del/Veh (s)	0.0	0.0	0.0	0.2	1.5	0.0	0.0	0.1
Total Delay (hr)	0.2	2.0	0.0	0.1	0.2	2.6	0.2	5.2
Total Del/Veh (s)	34.8	29.4	3.7	40.0	25.4	27.6	24.1	27.9
Vehicles Entered	17	236	8	5	21	331	28	646
Vehicles Exited	16	231	8	6	22	327	29	639
Hourly Exit Rate	64	924	32	24	88	1308	116	2556
Input Volume	74	1012	29	20	84	1253	98	2570
% of Volume	86	91	110	120	105	104	118	99

20: 3600 West & 2100 North EB Performance by movement Entire Run

Movement	EBL	EBT	EBR	NBT	NBR	SBL	SBT	All
Denied Delay (hr)	0.0	0.0	0.0	0.0	0.0	0.0	0.0	0.1
Denied Del/Veh (s)	0.0	0.0	0.0	0.2	1.7	0.0	0.0	0.1
Total Delay (hr)	0.7	8.0	0.0	0.2	0.7	10.9	0.8	21.5
Total Del/Veh (s)	35.0	28.2	3.8	42.7	29.2	31.1	25.4	29.5
Vehicles Entered	74	1010	31	20	88	1252	117	2592
Vehicles Exited	74	1011	31	20	89	1246	117	2588
Hourly Exit Rate	74	1011	31	20	89	1246	117	2588
Input Volume	75	1030	30	20	85	1275	100	2616
% of Volume	98	98	104	99	104	98	117	99

22: 2100 North WB Performance by movement Interval #1 5:00

Movement	WBL	WBT	All
Denied Delay (hr)	0.1	0.9	1.0
Denied Del/Veh (s)	5.3	4.9	5.0
Total Delay (hr)	0.3	5.2	5.5
Total Del/Veh (s)	13.9	28.1	26.7
Vehicles Entered	72	618	690
Vehicles Exited	71	628	699
Hourly Exit Rate	284	2512	2796
Input Volume	295	2500	2795
% of Volume	96	100	100

22: 2100 North WB Performance by movement Interval #2 5:15

Movement	WBL	WBT	All
Denied Delay (hr)	0.3	2.8	3.1
Denied Del/Veh (s)	14.0	14.6	14.5
Total Delay (hr)	0.5	8.1	8.6
Total Del/Veh (s)	20.6	41.5	39.3
Vehicles Entered	80	672	752
Vehicles Exited	81	634	715
Hourly Exit Rate	324	2536	2860
Input Volume	316	2679	2995
% of Volume	103	95	95

22: 2100 North WB Performance by movement Interval #3 5:30

Movement	WBL	WBT	All
Denied Delay (hr)	0.2	1.9	2.1
Denied Del/Veh (s)	10.1	10.6	10.5
Total Delay (hr)	0.5	9.2	9.7
Total Del/Veh (s)	23.0	46.6	44.4
Vehicles Entered	74	640	714
Vehicles Exited	73	667	740
Hourly Exit Rate	292	2668	2960
Input Volume	295	2500	2795
% of Volume	99	107	106

22: 2100 North WB Performance by movement Interval #4 5:45

Movement	WBL	WBT	All
Denied Delay (hr)	0.1	0.7	0.8
Denied Del/Veh (s)	4.2	3.8	3.9
Total Delay (hr)	0.3	6.7	7.0
Total Del/Veh (s)	14.8	35.7	33.6
Vehicles Entered	73	624	697
Vehicles Exited	73	618	691
Hourly Exit Rate	292	2472	2764
Input Volume	295	2500	2795
% of Volume	99	99	99

22: 2100 North WB Performance by movement Entire Run

Movement	WBL	WBT	All
Denied Delay (hr)	0.7	6.2	6.9
Denied Del/Veh (s)	8.6	8.7	8.7
Total Delay (hr)	1.6	29.2	30.8
Total Del/Veh (s)	19.0	40.5	38.2
Vehicles Entered	298	2554	2852
Vehicles Exited	298	2547	2845
Hourly Exit Rate	298	2547	2845
Input Volume	300	2545	2845
% of Volume	99	100	100

23: 2100 North EB Performance by movement Interval #1 5:00

Movement	EBT	SEL	All
Denied Delay (hr)	0.0	0.0	0.0
Denied Del/Veh (s)	0.0	0.0	0.0
Total Delay (hr)	0.4	0.7	1.1
Total Del/Veh (s)	2.5	34.1	6.1
Vehicles Entered	573	71	644
Vehicles Exited	569	71	640
Hourly Exit Rate	2276	284	2560
Input Volume	2349	295	2644
% of Volume	97	96	97

23: 2100 North EB Performance by movement Interval #2 5:15

Movement	EBT	SEL	All
Denied Delay (hr)	0.0	0.0	0.0
Denied Del/Veh (s)	0.0	0.0	0.0
Total Delay (hr)	0.4	0.9	1.4
Total Del/Veh (s)	2.4	40.3	7.0
Vehicles Entered	606	81	687
Vehicles Exited	611	78	689
Hourly Exit Rate	2444	312	2756
Input Volume	2517	316	2833
% of Volume	97	99	97

23: 2100 North EB Performance by movement Interval #3 5:30

Movement	EBT	SEL	All
Denied Delay (hr)	0.0	0.0	0.0
Denied Del/Veh (s)	0.0	0.0	0.0
Total Delay (hr)	0.4	0.7	1.1
Total Del/Veh (s)	2.6	31.0	6.0
Vehicles Entered	586	73	659
Vehicles Exited	582	74	656
Hourly Exit Rate	2328	296	2624
Input Volume	2349	295	2644
% of Volume	99	100	99

23: 2100 North EB Performance by movement Interval #4 5:45

Movement	EBT	SEL	All
Denied Delay (hr)	0.0	0.0	0.0
Denied Del/Veh (s)	0.0	0.0	0.0
Total Delay (hr)	0.4	0.7	1.1
Total Del/Veh (s)	2.4	33.9	6.1
Vehicles Entered	580	73	653
Vehicles Exited	584	74	658
Hourly Exit Rate	2336	296	2632
Input Volume	2349	295	2644
% of Volume	99	100	100

23: 2100 North EB Performance by movement Entire Run

Movement	EBT	SEL	All
Denied Delay (hr)	0.0	0.0	0.0
Denied Del/Veh (s)	0.0	0.0	0.0
Total Delay (hr)	1.6	3.1	4.7
Total Del/Veh (s)	2.5	36.6	6.4
Vehicles Entered	2345	298	2643
Vehicles Exited	2345	296	2641
Hourly Exit Rate	2345	296	2641
Input Volume	2391	300	2691
% of Volume	98	99	98

24: 2100 North EB Performance by movement Interval #1 5:00

Movement	EBL	EBT	All
Denied Delay (hr)	0.0	0.0	0.0
Denied Del/Veh (s)	1.7	0.4	0.4
Total Delay (hr)	0.0	2.2	2.2
Total Del/Veh (s)	6.0	26.9	26.4
Vehicles Entered	6	275	281
Vehicles Exited	6	284	290
Hourly Exit Rate	24	1136	1160
Input Volume	25	1115	1140
% of Volume	96	102	102

24: 2100 North EB Performance by movement Interval #2 5:15

Movement	EBL	EBT	All
Denied Delay (hr)	0.0	0.0	0.0
Denied Del/Veh (s)	1.6	0.4	0.5
Total Delay (hr)	0.0	4.0	4.0
Total Del/Veh (s)	11.5	46.4	45.5
Vehicles Entered	8	298	306
Vehicles Exited	8	273	281
Hourly Exit Rate	32	1092	1124
Input Volume	26	1195	1221
% of Volume	123	91	92

24: 2100 North EB Performance by movement Interval #3 5:30

Movement	EBL	EBT	All
Denied Delay (hr)	0.0	0.0	0.0
Denied Del/Veh (s)	1.9	0.4	0.4
Total Delay (hr)	0.0	4.6	4.7
Total Del/Veh (s)	19.6	52.9	52.5
Vehicles Entered	6	279	285
Vehicles Exited	6	297	303
Hourly Exit Rate	24	1188	1212
Input Volume	25	1115	1140
% of Volume	96	107	106

24: 2100 North EB Performance by movement Interval #4 5:45

Movement	EBL	EBT	All
Denied Delay (hr)	0.0	0.0	0.0
Denied Del/Veh (s)	2.2	0.4	0.4
Total Delay (hr)	0.0	3.4	3.4
Total Del/Veh (s)	12.8	42.7	42.3
Vehicles Entered	4	267	271
Vehicles Exited	5	261	266
Hourly Exit Rate	20	1044	1064
Input Volume	25	1115	1140
% of Volume	80	94	93

24: 2100 North EB Performance by movement Entire Run

Movement	EBL	EBT	All
Denied Delay (hr)	0.0	0.1	0.1
Denied Del/Veh (s)	1.8	0.4	0.4
Total Delay (hr)	0.1	14.2	14.3
Total Del/Veh (s)	12.4	44.9	44.2
Vehicles Entered	25	1120	1145
Vehicles Exited	25	1116	1141
Hourly Exit Rate	25	1116	1141
Input Volume	25	1135	1160
% of Volume	99	98	98

25: 2100 North WB Performance by movement Interval #1 5:00

Movement	WBT	NWL	All
Denied Delay (hr)	0.0	0.0	0.0
Denied Del/Veh (s)	0.0	0.0	0.0
Total Delay (hr)	0.4	0.0	0.4
Total Del/Veh (s)	3.2	15.9	3.4
Vehicles Entered	429	6	435
Vehicles Exited	427	6	433
Hourly Exit Rate	1708	24	1732
Input Volume	1642	25	1667
% of Volume	104	96	104

25: 2100 North WB Performance by movement Interval #2 5:15

Movement	WBT	NWL	All
Denied Delay (hr)	0.0	0.0	0.0
Denied Del/Veh (s)	0.0	0.0	0.0
Total Delay (hr)	0.4	0.0	0.4
Total Del/Veh (s)	3.3	11.6	3.5
Vehicles Entered	407	8	415
Vehicles Exited	409	8	417
Hourly Exit Rate	1636	32	1668
Input Volume	1758	26	1784
% of Volume	93	123	93

25: 2100 North WB Performance by movement Interval #3 5:30

Movement	WBT	NWL	All
Denied Delay (hr)	0.0	0.0	0.0
Denied Del/Veh (s)	0.0	0.0	0.0
Total Delay (hr)	0.4	0.0	0.4
Total Del/Veh (s)	3.4	9.4	3.5
Vehicles Entered	451	6	457
Vehicles Exited	448	5	453
Hourly Exit Rate	1792	20	1812
Input Volume	1642	25	1667
% of Volume	109	80	109

25: 2100 North WB Performance by movement Interval #4 5:45

Movement	WBT	NWL	All
Denied Delay (hr)	0.0	0.0	0.0
Denied Del/Veh (s)	0.0	0.0	0.0
Total Delay (hr)	0.4	0.0	0.4
Total Del/Veh (s)	3.2	9.1	3.3
Vehicles Entered	394	5	399
Vehicles Exited	397	6	403
Hourly Exit Rate	1588	24	1612
Input Volume	1642	25	1667
% of Volume	97	96	97

25: 2100 North WB Performance by movement Entire Run

Movement	WBT	NWL	All
Denied Delay (hr)	0.0	0.0	0.0
Denied Del/Veh (s)	0.0	0.0	0.0
Total Delay (hr)	1.5	0.1	1.6
Total Del/Veh (s)	3.3	12.0	3.4
Vehicles Entered	1681	25	1706
Vehicles Exited	1681	25	1706
Hourly Exit Rate	1681	25	1706
Input Volume	1671	25	1696
% of Volume	101	99	101

31: 400 East & Crossroads Blvd Performance by movement Interval #1 5:00

Movement	EBL	EBT	EBR	WBL	WBT	WBR	NBL	NBT	NBR	SBL	SBT	SBR
Denied Delay (hr)	0.0	0.0	0.0	0.0	0.0	0.0	0.0	0.0	0.0	0.0	0.0	0.0
Denied Del/Veh (s)	0.0	0.0	0.0	0.7	0.8	1.8	0.2	0.1	0.1	0.3	0.2	4.0
Total Delay (hr)	0.0	0.1	0.0	0.0	0.3	0.0	0.0	0.0	0.0	0.1	0.1	0.0
Total Del/Veh (s)	8.2	3.3	1.1	8.7	5.3	3.4	47.5	59.8	13.3	53.5	67.4	11.4
Vehicles Entered	8	148	4	14	194	5	2	1	8	6	4	12
Vehicles Exited	8	150	4	15	195	5	2	1	9	6	4	12
Hourly Exit Rate	32	600	16	60	780	20	8	4	36	24	16	48
Input Volume	34	629	15	59	786	25	10	5	34	25	20	49
% of Volume	94	95	107	102	99	80	80	80	106	96	80	98

31: 400 East & Crossroads Blvd Performance by movement Interval #1 5:00

Movement	All
Denied Delay (hr)	0.1
Denied Del/Veh (s)	0.6
Total Delay (hr)	0.8
Total Del/Veh (s)	6.6
Vehicles Entered	406
Vehicles Exited	411
Hourly Exit Rate	1644
Input Volume	1691
% of Volume	97

31: 400 East & Crossroads Blvd Performance by movement Interval #2 5:15

Movement	EBL	EBT	EBR	WBL	WBT	WBR	NBL	NBT	NBR	SBL	SBT	SBR
Denied Delay (hr)	0.0	0.0	0.0	0.0	0.1	0.0	0.0	0.0	0.0	0.0	0.0	0.0
Denied Del/Veh (s)	0.0	0.0	0.0	0.9	0.9	2.2	0.1	0.2	0.1	0.2	0.2	4.0
Total Delay (hr)	0.0	0.2	0.0	0.0	0.3	0.0	0.0	0.0	0.1	0.1	0.1	0.0
Total Del/Veh (s)	12.8	4.3	1.0	9.0	4.8	2.4	60.5	54.4	19.4	68.6	65.2	11.5
Vehicles Entered	9	164	4	15	215	7	2	1	11	5	6	12
Vehicles Exited	9	163	4	14	211	7	2	1	10	5	5	12
Hourly Exit Rate	36	652	16	56	844	28	8	4	40	20	20	48
Input Volume	37	675	16	63	842	26	11	5	37	26	21	53
% of Volume	97	97	100	89	100	108	73	80	108	77	95	91

31: 400 East & Crossroads Blvd Performance by movement Interval #2 5:15

Movement	All
Denied Delay (hr)	0.1
Denied Del/Veh (s)	0.6
Total Delay (hr)	0.9
Total Del/Veh (s)	7.3
Vehicles Entered	451
Vehicles Exited	443
Hourly Exit Rate	1772
Input Volume	1812
% of Volume	98

31: 400 East & Crossroads Blvd Performance by movement Interval #3 5:30

Movement	EBL	EBT	EBR	WBL	WBT	WBR	NBL	NBT	NBR	SBL	SBT	SBR
Denied Delay (hr)	0.0	0.0	0.0	0.0	0.0	0.0	0.0	0.0	0.0	0.0	0.0	0.0
Denied Del/Veh (s)	0.0	0.0	0.0	0.7	0.8	1.4	0.1	0.1	0.1	0.3	0.2	4.1
Total Delay (hr)	0.0	0.2	0.0	0.0	0.3	0.0	0.0	0.0	0.0	0.1	0.1	0.0
Total Del/Veh (s)	11.9	4.5	1.3	10.1	5.7	2.5	67.1	33.9	13.5	46.3	45.1	10.1
Vehicles Entered	9	168	3	14	198	6	2	2	9	7	5	11
Vehicles Exited	8	162	3	15	201	5	2	2	9	7	5	11
Hourly Exit Rate	32	648	12	60	804	20	8	8	36	28	20	44
Input Volume	34	629	15	59	786	25	10	5	34	25	20	49
% of Volume	94	103	80	102	102	80	80	160	106	112	100	90

31: 400 East & Crossroads Blvd Performance by movement Interval #3 5:30

Movement	All
Denied Delay (hr)	0.1
Denied Del/Veh (s)	0.5
Total Delay (hr)	0.9
Total Del/Veh (s)	7.4
Vehicles Entered	434
Vehicles Exited	430
Hourly Exit Rate	1720
Input Volume	1691
% of Volume	102

31: 400 East & Crossroads Blvd Performance by movement Interval #4 5:45

Movement	EBL	EBT	EBR	WBL	WBT	WBR	NBL	NBT	NBR	SBL	SBT	SBR
Denied Delay (hr)	0.0	0.0	0.0	0.0	0.0	0.0	0.0	0.0	0.0	0.0	0.0	0.0
Denied Del/Veh (s)	0.0	0.0	0.0	0.6	0.7	1.7	0.1	0.3	0.1	0.4	0.2	4.1
Total Delay (hr)	0.0	0.1	0.0	0.0	0.3	0.0	0.0	0.0	0.0	0.0	0.1	0.0
Total Del/Veh (s)	8.9	3.0	1.2	8.9	4.9	1.7	58.2	50.9	13.4	33.1	38.4	10.2
Vehicles Entered	8	153	4	14	196	8	3	1	8	5	5	13
Vehicles Exited	8	156	4	14	196	8	3	1	9	5	5	13
Hourly Exit Rate	32	624	16	56	784	32	12	4	36	20	20	52
Input Volume	34	629	15	59	786	25	10	5	34	25	20	49
% of Volume	94	99	107	95	100	128	120	80	106	80	100	106

31: 400 East & Crossroads Blvd Performance by movement Interval #4 5:45

Movement	All
Denied Delay (hr)	0.1
Denied Del/Veh (s)	0.5
Total Delay (hr)	0.7
Total Del/Veh (s)	5.9
Vehicles Entered	418
Vehicles Exited	422
Hourly Exit Rate	1688
Input Volume	1691
% of Volume	100

31: 400 East & Crossroads Blvd Performance by movement Entire Run

Movement	EBL	EBT	EBR	WBL	WBT	WBR	NBL	NBT	NBR	SBL	SBT	SBR
Denied Delay (hr)	0.0	0.0	0.0	0.0	0.2	0.0	0.0	0.0	0.0	0.0	0.0	0.1
Denied Del/Veh (s)	0.0	0.0	0.0	0.7	0.8	1.9	0.1	0.2	0.1	0.3	0.2	4.0
Total Delay (hr)	0.1	0.7	0.0	0.2	1.2	0.0	0.1	0.1	0.2	0.4	0.3	0.2
Total Del/Veh (s)	10.9	3.8	1.2	9.3	5.3	2.4	58.3	46.6	16.0	55.2	58.1	11.3
Vehicles Entered	33	632	15	58	804	25	8	5	36	23	20	48
Vehicles Exited	33	630	15	58	803	26	8	5	36	23	20	48
Hourly Exit Rate	33	630	15	58	803	26	8	5	36	23	20	48
Input Volume	35	640	15	60	800	25	10	5	35	25	20	50
% of Volume	95	98	98	97	100	103	78	100	104	91	99	96

31: 400 East & Crossroads Blvd Performance by movement Entire Run

Movement	All
Denied Delay (hr)	0.3
Denied Del/Veh (s)	0.6
Total Delay (hr)	3.3
Total Del/Veh (s)	7.0
Vehicles Entered	1707
Vehicles Exited	1705
Hourly Exit Rate	1705
Input Volume	1721
% of Volume	99

34: Crossroads Blvd Performance by movement Interval #1 5:00

Movement	EBT	EBR	WBT	All
Denied Delay (hr)	0.0	0.0	0.0	0.0
Denied Del/Veh (s)	0.0	0.0	0.0	0.0
Total Delay (hr)	0.2	0.0	0.0	0.2
Total Del/Veh (s)	4.9	1.4	0.3	2.3
Vehicles Entered	156	4	209	369
Vehicles Exited	154	4	209	367
Hourly Exit Rate	616	16	836	1468
Input Volume	678	20	845	1543
% of Volume	91	80	99	95

34: Crossroads Blvd Performance by movement Interval #2 5:15

Movement	EBT	EBR	WBT	All
Denied Delay (hr)	0.0	0.0	0.0	0.0
Denied Del/Veh (s)	0.0	0.0	0.0	0.0
Total Delay (hr)	0.3	0.0	0.0	0.3
Total Del/Veh (s)	5.2	1.3	0.3	2.4
Vehicles Entered	168	4	224	396
Vehicles Exited	176	5	225	406
Hourly Exit Rate	704	20	900	1624
Input Volume	726	21	906	1653
% of Volume	97	95	99	98

34: Crossroads Blvd Performance by movement Interval #3 5:30

Movement	EBT	EBR	WBT	All
Denied Delay (hr)	0.0	0.0	0.0	0.0
Denied Del/Veh (s)	0.0	0.0	0.0	0.0
Total Delay (hr)	0.3	0.0	0.0	0.3
Total Del/Veh (s)	5.5	1.6	0.3	2.7
Vehicles Entered	181	4	212	397
Vehicles Exited	180	4	212	396
Hourly Exit Rate	720	16	848	1584
Input Volume	678	20	845	1543
% of Volume	106	80	100	103

34: Crossroads Blvd Performance by movement Interval #4 5:45

Movement	EBT	EBR	WBT	All
Denied Delay (hr)	0.0	0.0	0.0	0.0
Denied Del/Veh (s)	0.0	0.0	0.0	0.0
Total Delay (hr)	0.3	0.0	0.0	0.3
Total Del/Veh (s)	5.3	1.4	0.3	2.5
Vehicles Entered	170	5	212	387
Vehicles Exited	168	5	213	386
Hourly Exit Rate	672	20	852	1544
Input Volume	678	20	845	1543
% of Volume	99	100	101	100

34: Crossroads Blvd Performance by movement Entire Run

Movement	EBT	EBR	WBT	All
Denied Delay (hr)	0.0	0.0	0.0	0.0
Denied Del/Veh (s)	0.0	0.0	0.0	0.0
Total Delay (hr)	1.0	0.0	0.1	1.1
Total Del/Veh (s)	5.3	1.3	0.3	2.5
Vehicles Entered	674	18	858	1550
Vehicles Exited	679	19	859	1557
Hourly Exit Rate	679	19	859	1557
Input Volume	690	20	860	1570
% of Volume	98	94	100	99

38: Performance by movement Interval #1 5:00

Movement	EBL	EBR	NBL	NBT	SBT	SBR	All
Denied Delay (hr)	0.0	0.0	0.0	0.0	0.2	0.0	0.2
Denied Del/Veh (s)	0.2	0.2	0.0	0.0	0.9	1.7	0.6
Total Delay (hr)	1.2	0.8	1.1	0.3	9.0	0.7	13.1
Total Del/Veh (s)	104.0	44.6	55.9	3.7	50.9	37.5	40.7
Vehicles Entered	38	58	62	276	607	60	1101
Vehicles Exited	35	58	62	275	566	56	1052
Hourly Exit Rate	140	232	248	1100	2264	224	4208
Input Volume	157	231	265	1121	2363	246	4383
% of Volume	89	100	94	98	96	91	96

38: Performance by movement Interval #2 5:15

Movement	EBL	EBR	NBL	NBT	SBT	SBR	All
Denied Delay (hr)	0.0	0.0	0.0	0.0	1.3	0.1	1.5
Denied Del/Veh (s)	0.2	0.3	0.0	0.0	7.5	8.0	4.5
Total Delay (hr)	2.1	0.9	1.2	0.3	20.1	1.9	26.6
Total Del/Veh (s)	146.5	46.7	60.6	3.7	105.8	92.8	76.7
Vehicles Entered	43	63	67	291	615	64	1143
Vehicles Exited	38	63	66	284	568	61	1080
Hourly Exit Rate	152	252	264	1136	2272	244	4320
Input Volume	168	247	284	1201	2532	263	4695
% of Volume	90	102	93	95	90	93	92

38: Performance by movement Interval #3 5:30

Movement	EBL	EBR	NBL	NBT	SBT	SBR	All
Denied Delay (hr)	0.0	0.0	0.0	0.0	8.1	0.8	8.9
Denied Del/Veh (s)	0.2	0.2	0.0	0.0	46.9	47.1	28.2
Total Delay (hr)	2.8	0.9	1.3	0.3	24.6	2.3	32.2
Total Del/Veh (s)	198.2	49.5	63.2	3.6	129.0	114.2	92.4
Vehicles Entered	36	57	68	295	571	60	1087
Vehicles Exited	39	60	71	296	563	58	1087
Hourly Exit Rate	156	240	284	1184	2252	232	4348
Input Volume	157	231	265	1121	2363	246	4383
% of Volume	99	104	107	106	95	94	99

38: Performance by movement Interval #4 5:45

Movement	EBL	EBR	NBL	NBT	SBT	SBR	All
Denied Delay (hr)	0.0	0.0	0.0	0.0	15.1	1.5	16.5
Denied Del/Veh (s)	0.3	0.2	0.0	0.0	84.2	81.6	52.4
Total Delay (hr)	2.7	0.8	1.2	0.3	25.1	2.4	32.6
Total Del/Veh (s)	207.6	47.8	65.3	3.7	129.5	121.1	95.6
Vehicles Entered	36	58	64	270	573	59	1060
Vehicles Exited	37	60	65	268	567	61	1058
Hourly Exit Rate	148	240	260	1072	2268	244	4232
Input Volume	157	231	265	1121	2363	246	4383
% of Volume	94	104	98	96	96	99	97

38: Performance by movement Entire Run

Movement	EBL	EBR	NBL	NBT	SBT	SBR	All
Denied Delay (hr)	0.0	0.0	0.0	0.0	24.6	2.5	27.1
Denied Del/Veh (s)	0.2	0.2	0.0	0.0	36.4	35.8	21.9
Total Delay (hr)	8.8	3.4	4.9	1.2	78.9	7.2	104.4
Total Del/Veh (s)	199.7	50.5	65.8	3.8	118.6	105.4	84.5
Vehicles Entered	154	236	260	1133	2366	244	4393
Vehicles Exited	149	240	264	1124	2264	236	4277
Hourly Exit Rate	149	240	264	1124	2264	236	4277
Input Volume	160	235	270	1141	2405	250	4461
% of Volume	93	102	98	99	94	94	96

Total Network Performance By Interval

Interval Start	5:00	5:15	5:30	5:45	All
Denied Delay (hr)	1.7	5.2	11.6	17.9	36.3
Denied Del/Veh (s)	2.0	5.7	13.5	20.8	10.6
Total Delay (hr)	64.8	89.5	99.9	96.6	350.8
Total Del/Veh (s)	66.7	84.2	95.6	93.4	98.8
Vehicles Entered	3025	3238	3033	3005	12314
Vehicles Exited	2919	3095	3043	3036	12097
Hourly Exit Rate	11676	12380	12172	12144	12097
Input Volume	62818	67296	62818	62818	63938
% of Volume	19	18	19	19	19

Intersection: 2: Redwood Road & Crossroads Blvd, Interval #1

Movement	EB	EB	EB	EB	EB	EB	WB	WB	WB	WB	WB	WB
Directions Served	L	L	T	T	T	R	L	L	T	T	T	R
Maximum Queue (ft)	193	210	147	128	58	28	150	165	160	164	146	103
Average Queue (ft)	134	154	103	56	12	10	89	104	116	124	105	49
95th Queue (ft)	214	223	149	128	49	30	154	168	168	171	161	112
Link Distance (ft)			1586	1586					901	901		
Upstream Blk Time (%)												
Queuing Penalty (veh)												
Storage Bay Dist (ft)	700	700			500	500	220	220			340	340
Storage Blk Time (%)								0	0			
Queuing Penalty (veh)								0	0			

Intersection: 2: Redwood Road & Crossroads Blvd, Interval #1

Movement	NB	NB	NB	NB	NB	SB	SB	SB	SB	SB
Directions Served	L	L	T	T	R	L	L	T	T	R
Maximum Queue (ft)	189	222	300	266	40	163	150	395	405	168
Average Queue (ft)	127	165	221	193	21	109	92	248	267	97
95th Queue (ft)	214	233	310	285	42	174	169	442	453	184
Link Distance (ft)			1242	1242				1013	1013	1013
Upstream Blk Time (%)										
Queuing Penalty (veh)										
Storage Bay Dist (ft)	200	200			300	450	450			
Storage Blk Time (%)	0	3	13	0				1		
Queuing Penalty (veh)	2	11	38	0				3		

Intersection: 2: Redwood Road & Crossroads Blvd, Interval #2

Movement	EB	EB	EB	EB	EB	EB	WB	WB	WB	WB	WB	WB
Directions Served	L	L	T	T	T	R	L	L	T	T	T	R
Maximum Queue (ft)	213	234	153	129	34	40	151	168	154	170	144	112
Average Queue (ft)	140	160	107	69	10	16	96	118	113	119	98	53
95th Queue (ft)	223	240	176	149	36	42	159	182	160	174	151	111
Link Distance (ft)			1586	1586					901	901		
Upstream Blk Time (%)												
Queuing Penalty (veh)												
Storage Bay Dist (ft)	700	700			500	500	220	220			340	340
Storage Blk Time (%)							0	0				
Queuing Penalty (veh)							0	0				

Intersection: 2: Redwood Road & Crossroads Blvd, Interval #2

Movement	NB	NB	NB	NB	NB	SB	SB	SB	SB	SB
Directions Served	L	L	T	T	R	L	L	T	T	R
Maximum Queue (ft)	191	206	284	280	46	231	276	458	451	183
Average Queue (ft)	131	162	213	195	27	130	133	285	298	116
95th Queue (ft)	210	222	303	300	49	249	322	511	508	196
Link Distance (ft)			1242	1242				1013	1013	1013
Upstream Blk Time (%)										
Queuing Penalty (veh)										
Storage Bay Dist (ft)	200	200			300	450	450			
Storage Blk Time (%)	0	1	11	1			0	2		
Queuing Penalty (veh)	0	6	34	1			0	5		

Intersection: 2: Redwood Road & Crossroads Blvd, Interval #3

Movement	EB	EB	EB	EB	EB	EB	WB	WB	WB	WB	WB	WB
Directions Served	L	L	T	T	T	R	L	L	T	T	T	R
Maximum Queue (ft)	193	207	157	139	32	37	131	143	152	170	151	77
Average Queue (ft)	141	153	113	72	11	15	91	109	112	117	97	46
95th Queue (ft)	209	215	168	147	33	44	141	155	160	174	157	87
Link Distance (ft)			1586	1586					901	901		
Upstream Blk Time (%)												
Queuing Penalty (veh)												
Storage Bay Dist (ft)	700	700			500	500	220	220			340	340
Storage Blk Time (%)							0	0				
Queuing Penalty (veh)							0	0				

Intersection: 2: Redwood Road & Crossroads Blvd, Interval #3

Movement	NB	NB	NB	NB	NB	SB	SB	SB	SB	SB
Directions Served	L	L	T	T	R	L	L	T	T	R
Maximum Queue (ft)	179	225	317	275	49	189	264	477	473	179
Average Queue (ft)	124	159	224	185	25	127	143	312	324	111
95th Queue (ft)	196	235	328	298	49	192	364	573	575	188
Link Distance (ft)			1242	1242				1013	1013	1013
Upstream Blk Time (%)										
Queuing Penalty (veh)										
Storage Bay Dist (ft)	200	200			300	450	450			
Storage Blk Time (%)	0	2	14	1				3		
Queuing Penalty (veh)	1	9	41	1				8		

Intersection: 2: Redwood Road & Crossroads Blvd, Interval #4

Movement	EB	EB	EB	EB	EB	EB	WB	WB	WB	WB	WB	WB
Directions Served	L	L	T	T	T	R	L	L	T	T	T	R
Maximum Queue (ft)	185	213	156	132	47	30	144	163	157	174	158	76
Average Queue (ft)	119	145	108	70	13	10	99	115	117	122	104	41
95th Queue (ft)	191	215	164	144	50	33	160	174	168	186	174	79
Link Distance (ft)			1586	1586					901	901		
Upstream Blk Time (%)												
Queuing Penalty (veh)												
Storage Bay Dist (ft)	700	700			500	500	220	220			340	340
Storage Blk Time (%)							0	0				
Queuing Penalty (veh)							0	0				

Intersection: 2: Redwood Road & Crossroads Blvd, Interval #4

Movement	NB	NB	NB	NB	NB	SB	SB	SB	SB	SB
Directions Served	L	L	T	T	R	L	L	T	T	R
Maximum Queue (ft)	183	214	286	261	38	172	238	447	450	230
Average Queue (ft)	128	166	206	181	23	112	127	338	353	120
95th Queue (ft)	204	221	295	275	44	171	319	652	661	308
Link Distance (ft)			1242	1242				1013	1013	1013
Upstream Blk Time (%)								0		
Queuing Penalty (veh)								0		
Storage Bay Dist (ft)	200	200			300	450	450			
Storage Blk Time (%)	0	3	8	0				6		
Queuing Penalty (veh)	0	10	24	0				15		

Intersection: 2: Redwood Road & Crossroads Blvd, All Intervals

Movement	EB	EB	EB	EB	EB	EB	WB	WB	WB	WB	WB	WB
Directions Served	L	L	T	T	T	R	L	L	T	T	T	R
Maximum Queue (ft)	230	250	184	164	81	53	180	190	174	186	170	135
Average Queue (ft)	133	153	108	67	11	13	94	112	114	120	101	47
95th Queue (ft)	211	224	165	143	43	38	154	171	164	177	161	99
Link Distance (ft)			1586	1586					901	901		
Upstream Blk Time (%)												
Queuing Penalty (veh)												
Storage Bay Dist (ft)	700	700			500	500	220	220			340	340
Storage Blk Time (%)							0	0	0			
Queuing Penalty (veh)							0	0	0			

Intersection: 2: Redwood Road & Crossroads Blvd, All Intervals

Movement	NB	NB	NB	NB	NB	SB	SB	SB	SB	SB
Directions Served	L	L	T	T	R	L	L	T	T	R
Maximum Queue (ft)	215	250	338	316	57	265	356	590	570	276
Average Queue (ft)	127	163	216	189	24	120	124	296	310	111
95th Queue (ft)	206	228	310	290	46	201	305	554	560	229
Link Distance (ft)			1242	1242				1013	1013	1013
Upstream Blk Time (%)								0		
Queuing Penalty (veh)								0		
Storage Bay Dist (ft)	200	200			300	450	450			
Storage Blk Time (%)	0	2	11	0			0	3		
Queuing Penalty (veh)	1	9	34	1			0	8		

Intersection: 3: Redwood Road & Commerce Drive, Interval #1

Movement	EB	EB	EB	WB	WB	WB	NB	NB	NB	NB	SB	SB
Directions Served	L	T	R	L	T	R	L	T	T	R	L	T
Maximum Queue (ft)	198	275	125	56	56	61	130	322	331	56	278	452
Average Queue (ft)	142	103	65	21	24	30	77	229	228	9	126	306
95th Queue (ft)	225	290	149	56	59	59	135	341	345	84	278	480
Link Distance (ft)		1102			583			1013	1013			509
Upstream Blk Time (%)												0
Queuing Penalty (veh)												3
Storage Bay Dist (ft)	110		150	105		105	250			250	300	
Storage Blk Time (%)	34	0		0		0		8	8			9
Queuing Penalty (veh)	54	1		0		0		8	2			12

Intersection: 3: Redwood Road & Commerce Drive, Interval #1

Movement	SB	SB
Directions Served	T	R
Maximum Queue (ft)	503	250
Average Queue (ft)	346	173
95th Queue (ft)	526	346
Link Distance (ft)	509	
Upstream Blk Time (%)	1	
Queuing Penalty (veh)	10	
Storage Bay Dist (ft)		150
Storage Blk Time (%)	24	
Queuing Penalty (veh)	94	

Intersection: 3: Redwood Road & Commerce Drive, Interval #2

Movement	EB	EB	EB	WB	WB	WB	NB	NB	NB	NB	SB	SB
Directions Served	L	T	R	L	T	R	L	T	T	R	L	T
Maximum Queue (ft)	202	253	153	62	59	72	192	343	337	91	214	479
Average Queue (ft)	149	90	71	27	27	33	89	247	246	11	108	346
95th Queue (ft)	228	258	149	69	61	71	205	378	372	87	228	507
Link Distance (ft)		1102			583			1013	1013			509
Upstream Blk Time (%)												1
Queuing Penalty (veh)												9
Storage Bay Dist (ft)	110		150	105		105	250			250	300	
Storage Blk Time (%)	37	1	1	1	0	1		8	8			10
Queuing Penalty (veh)	64	3	3	1	0	0		8	3			14

Intersection: 3: Redwood Road & Commerce Drive, Interval #2

Movement	SB	SB
Directions Served	T	R
Maximum Queue (ft)	503	250
Average Queue (ft)	398	181
95th Queue (ft)	572	341
Link Distance (ft)	509	
Upstream Blk Time (%)	2	
Queuing Penalty (veh)	28	
Storage Bay Dist (ft)		150
Storage Blk Time (%)	23	0
Queuing Penalty (veh)	95	2

Intersection: 3: Redwood Road & Commerce Drive, Interval #3

Movement	EB	EB	EB	WB	WB	WB	NB	NB	NB	NB	SB	SB
Directions Served	L	T	R	L	T	R	L	T	T	R	L	T
Maximum Queue (ft)	196	195	143	59	58	62	135	392	376	51	341	477
Average Queue (ft)	140	81	67	23	21	31	81	262	249	9	146	375
95th Queue (ft)	214	236	148	59	57	63	140	405	401	83	360	558
Link Distance (ft)		1102			583			1013	1013			509
Upstream Blk Time (%)												2
Queuing Penalty (veh)												23
Storage Bay Dist (ft)	110		150	105		105	250			250	300	
Storage Blk Time (%)	28	0	0					12	12		0	14
Queuing Penalty (veh)	46	1	0					11	3		0	18

Intersection: 3: Redwood Road & Commerce Drive, Interval #3

Movement	SB	SB
Directions Served	T	R
Maximum Queue (ft)	494	250
Average Queue (ft)	403	212
95th Queue (ft)	581	348
Link Distance (ft)	509	
Upstream Blk Time (%)	4	
Queuing Penalty (veh)	48	
Storage Bay Dist (ft)		150
Storage Blk Time (%)	24	0
Queuing Penalty (veh)	92	1

Intersection: 3: Redwood Road & Commerce Drive, Interval #4

Movement	EB	EB	EB	WB	WB	WB	NB	NB	NB	NB	SB	SB
Directions Served	L	T	R	L	T	R	L	T	T	R	L	T
Maximum Queue (ft)	200	247	156	63	50	59	155	346	356	29	208	469
Average Queue (ft)	143	92	68	28	27	34	77	230	223	8	101	351
95th Queue (ft)	224	254	155	71	60	63	163	366	366	30	229	517
Link Distance (ft)		1102			583			1013	1013			509
Upstream Blk Time (%)												1
Queuing Penalty (veh)												8
Storage Bay Dist (ft)	110		150	105		105	250			250	300	
Storage Blk Time (%)	32	0	0	0	0			9	8			12
Queuing Penalty (veh)	52	0	0	0	0			8	2			15

Intersection: 3: Redwood Road & Commerce Drive, Interval #4

Movement	SB	SB
Directions Served	T	R
Maximum Queue (ft)	488	250
Average Queue (ft)	387	194
95th Queue (ft)	552	344
Link Distance (ft)	509	
Upstream Blk Time (%)	1	
Queuing Penalty (veh)	15	
Storage Bay Dist (ft)		150
Storage Blk Time (%)	24	
Queuing Penalty (veh)	95	

Intersection: 3: Redwood Road & Commerce Drive, All Intervals

Movement	EB	EB	EB	WB	WB	WB	NB	NB	NB	NB	SB	SB
Directions Served	L	T	R	L	T	R	L	T	T	R	L	T
Maximum Queue (ft)	209	365	207	82	74	87	240	431	427	173	432	522
Average Queue (ft)	144	92	68	25	25	32	81	242	237	9	120	345
95th Queue (ft)	223	260	150	64	60	64	165	375	373	75	281	521
Link Distance (ft)		1102			583			1013	1013			509
Upstream Blk Time (%)												1
Queuing Penalty (veh)												11
Storage Bay Dist (ft)	110		150	105		105	250			250	300	
Storage Blk Time (%)	33	0	0	0	0	0		9	9		0	11
Queuing Penalty (veh)	54	1	1	0	0	0		9	3		0	15

Intersection: 3: Redwood Road & Commerce Drive, All Intervals

Movement	SB	SB
Directions Served	T	R
Maximum Queue (ft)	535	250
Average Queue (ft)	383	190
95th Queue (ft)	562	347
Link Distance (ft)	509	
Upstream Blk Time (%)	2	
Queuing Penalty (veh)	25	
Storage Bay Dist (ft)		150
Storage Blk Time (%)	24	0
Queuing Penalty (veh)	94	1

Intersection: 11: Redwood Road & Aspen Hills Blvd, Interval #1

Movement	EB	NB	NB	SB
Directions Served	LR	L	T	R
Maximum Queue (ft)	114	66	13	4
Average Queue (ft)	51	32	5	1
95th Queue (ft)	118	74	41	6
Link Distance (ft)	1436		760	
Upstream Blk Time (%)				
Queuing Penalty (veh)				
Storage Bay Dist (ft)		100		200
Storage Blk Time (%)		0	0	
Queuing Penalty (veh)		3	0	

Intersection: 11: Redwood Road & Aspen Hills Blvd, Interval #2

Movement	EB	NB	NB	SB	B5
Directions Served	LR	L	T	R	T
Maximum Queue (ft)	255	82	44	7	212
Average Queue (ft)	176	41	8	1	30
95th Queue (ft)	375	92	61	8	322
Link Distance (ft)	1436		760		1022
Upstream Blk Time (%)					
Queuing Penalty (veh)					
Storage Bay Dist (ft)		100		200	
Storage Blk Time (%)		5	0		
Queuing Penalty (veh)		37	0		

Intersection: 11: Redwood Road & Aspen Hills Blvd, Interval #3

Movement	EB	NB	NB	SB	B5
Directions Served	LR	L	T	R	T
Maximum Queue (ft)	389	70	12	6	322
Average Queue (ft)	306	41	2	1	46
95th Queue (ft)	586	95	24	10	405
Link Distance (ft)	1436		760		1022
Upstream Blk Time (%)					0
Queuing Penalty (veh)					1
Storage Bay Dist (ft)		100		200	
Storage Blk Time (%)		11	0		
Queuing Penalty (veh)		74	0		

Intersection: 11: Redwood Road & Aspen Hills Blvd, Interval #4

Movement	EB	NB	NB	SB	B5	B5
Directions Served	LR	L	T	R	T	T
Maximum Queue (ft)	431	70	29	6	99	101
Average Queue (ft)	366	32	6	1	14	14
95th Queue (ft)	765	81	51	9	208	213
Link Distance (ft)	1436		760		1022	1022
Upstream Blk Time (%)						0
Queuing Penalty (veh)						0
Storage Bay Dist (ft)		100		200		
Storage Blk Time (%)		1	0			
Queuing Penalty (veh)		10	0			

Intersection: 11: Redwood Road & Aspen Hills Blvd, All Intervals

Movement	EB	NB	NB	SB	B5	B5
Directions Served	LR	L	T	R	T	T
Maximum Queue (ft)	466	102	98	19	99	636
Average Queue (ft)	225	37	5	1	4	23
95th Queue (ft)	558	86	46	9	101	276
Link Distance (ft)	1436		760		1022	1022
Upstream Blk Time (%)						0
Queuing Penalty (veh)						0
Storage Bay Dist (ft)		100		200		
Storage Blk Time (%)		4	0			
Queuing Penalty (veh)		31	0			

Intersection: 13: Redwood Road & Sergeant Court Drive, Interval #1

Movement	EB	EB	NB	NB	SB	SB	B6
Directions Served	L	R	L	T	T	T	T
Maximum Queue (ft)	24	92	70	77	45	95	8
Average Queue (ft)	10	44	35	18	8	17	1
95th Queue (ft)	35	104	93	92	64	97	17
Link Distance (ft)		818		509	232	232	760
Upstream Blk Time (%)					0	0	
Queuing Penalty (veh)					0	4	
Storage Bay Dist (ft)	25		50				
Storage Blk Time (%)	33	65	30			1	
Queuing Penalty (veh)	8	3	211			0	

Intersection: 13: Redwood Road & Sergeant Court Drive, Interval #2

Movement	EB	EB	NB	NB	NB	SB	SB	B6
Directions Served	L	R	L	T	T	T	T	T
Maximum Queue (ft)	40	145	92	141	55	103	149	6
Average Queue (ft)	22	93	60	45	23	20	40	1
95th Queue (ft)	49	199	128	225	185	113	160	12
Link Distance (ft)		818		509	509	232	232	760
Upstream Blk Time (%)				1	1	0	0	
Queuing Penalty (veh)				9	6	2	3	
Storage Bay Dist (ft)	25		50					
Storage Blk Time (%)	70	67	63				3	
Queuing Penalty (veh)	18	3	473				1	

Intersection: 13: Redwood Road & Sergeant Court Drive, Interval #3

Movement	EB	EB	NB	NB	NB	SB	SB	B6	B6
Directions Served	L	R	L	T	T	T	T	T	T
Maximum Queue (ft)	38	222	96	151	65	121	158	30	35
Average Queue (ft)	27	158	63	48	25	42	76	4	8
95th Queue (ft)	47	380	136	228	191	178	263	42	59
Link Distance (ft)		818		509	509	232	232	760	760
Upstream Blk Time (%)				1	0	1	3		
Queuing Penalty (veh)				10	1	9	40		
Storage Bay Dist (ft)	25		50						
Storage Blk Time (%)	94	42	64				6		
Queuing Penalty (veh)	23	2	446				1		

Intersection: 13: Redwood Road & Sergeant Court Drive, Interval #4

Movement	EB	EB	NB	NB	NB	SB	SB	B6	B6
Directions Served	L	R	L	T	T	T	T	T	T
Maximum Queue (ft)	30	285	102	127	68	90	128	10	18
Average Queue (ft)	24	226	72	42	22	10	31	1	3
95th Queue (ft)	46	525	136	223	171	85	143	21	35
Link Distance (ft)		818		509	509	232	232	760	760
Upstream Blk Time (%)				1	0	0	1		
Queuing Penalty (veh)				7	1	3	12		
Storage Bay Dist (ft)	25		50						
Storage Blk Time (%)	86	64	77				2		
Queuing Penalty (veh)	22	3	538				0		

Intersection: 13: Redwood Road & Sergeant Court Drive, All Intervals

Movement	EB	EB	NB	NB	NB	SB	SB	B6	B6
Directions Served	L	R	L	T	T	T	T	T	T
Maximum Queue (ft)	48	312	127	244	134	209	256	36	51
Average Queue (ft)	21	130	57	38	17	20	41	2	3
95th Queue (ft)	47	356	127	200	157	117	176	24	35
Link Distance (ft)		818		509	509	232	232	760	760
Upstream Blk Time (%)				1	0	0	1		
Queuing Penalty (veh)				7	2	3	15		
Storage Bay Dist (ft)	25		50						
Storage Blk Time (%)	71	59	58				3		
Queuing Penalty (veh)	18	3	417				1		

Intersection: 19: 3600 West & 2100 North WB, Interval #1

Movement	WB	WB	WB	WB	NB	NB	NB	SB	SB	SB
Directions Served	L	T	T	R	L	T	T	T	T	R
Maximum Queue (ft)	90	153	152	161	36	69	68	569	522	286
Average Queue (ft)	56	145	145	137	14	38	30	390	361	170
95th Queue (ft)	109	156	155	175	42	71	74	629	589	378
Link Distance (ft)	78	78	78	78	258	258	258	762	762	
Upstream Blk Time (%)	4	44	42	21				1	1	
Queuing Penalty (veh)	27	278	264	133				0	0	
Storage Bay Dist (ft)										150
Storage Blk Time (%)									35	0
Queuing Penalty (veh)									51	3

Intersection: 19: 3600 West & 2100 North WB, Interval #2

Movement	WB	WB	WB	WB	NB	NB	NB	SB	SB	SB
Directions Served	L	T	T	R	L	T	T	T	T	R
Maximum Queue (ft)	82	151	159	156	60	68	67	565	555	278
Average Queue (ft)	43	143	145	130	29	43	36	409	377	145
95th Queue (ft)	93	154	157	177	70	75	74	577	556	333
Link Distance (ft)	78	78	78	78	258	258	258	762	762	
Upstream Blk Time (%)	4	54	53	26				0	0	
Queuing Penalty (veh)	24	362	355	173				0	0	
Storage Bay Dist (ft)										150
Storage Blk Time (%)									34	0
Queuing Penalty (veh)									54	1

Intersection: 19: 3600 West & 2100 North WB, Interval #3

Movement	WB	WB	WB	WB	NB	NB	NB	SB	SB	SB
Directions Served	L	T	T	R	L	T	T	T	T	R
Maximum Queue (ft)	79	150	147	160	52	70	70	583	555	300
Average Queue (ft)	52	143	144	145	18	36	28	399	369	146
95th Queue (ft)	87	150	150	170	52	69	73	626	598	353
Link Distance (ft)	78	78	78	78	258	258	258	762	762	
Upstream Blk Time (%)	3	49	48	26				1	1	
Queuing Penalty (veh)	21	304	301	163				0	0	
Storage Bay Dist (ft)										150
Storage Blk Time (%)									38	0
Queuing Penalty (veh)									56	2

Intersection: 19: 3600 West & 2100 North WB, Interval #4

Movement	WB	WB	WB	WB	NB	NB	NB	SB	SB	SB
Directions Served	L	T	T	R	L	T	T	T	T	R
Maximum Queue (ft)	82	150	152	154	52	77	64	541	514	300
Average Queue (ft)	43	144	144	131	24	45	35	422	389	151
95th Queue (ft)	85	154	155	175	59	78	69	660	626	345
Link Distance (ft)	78	78	78	78	258	258	258	762	762	
Upstream Blk Time (%)	4	52	51	27				1	0	
Queuing Penalty (veh)	24	327	319	166				0	0	
Storage Bay Dist (ft)										150
Storage Blk Time (%)									35	
Queuing Penalty (veh)									52	

Intersection: 19: 3600 West & 2100 North WB, All Intervals

Movement	WB	WB	WB	WB	NB	NB	NB	SB	SB	SB
Directions Served	L	T	T	R	L	T	T	T	T	R
Maximum Queue (ft)	106	162	165	179	71	88	87	700	685	300
Average Queue (ft)	49	144	144	136	21	41	32	405	374	153
95th Queue (ft)	95	154	154	176	57	74	73	626	594	353
Link Distance (ft)	78	78	78	78	258	258	258	762	762	
Upstream Blk Time (%)	4	50	49	25				1	0	
Queuing Penalty (veh)	24	318	310	159				0	0	
Storage Bay Dist (ft)										150
Storage Blk Time (%)									35	0
Queuing Penalty (veh)									53	2

Intersection: 20: 3600 West & 2100 North EB, Interval #1

Movement	EB	EB	EB	EB	NB	NB	SB	SB	SB
Directions Served	L	T	T	R	T	R	L	L	T
Maximum Queue (ft)	94	131	140	37	34	84	253	256	131
Average Queue (ft)	55	128	130	16	10	40	203	199	72
95th Queue (ft)	101	135	143	43	37	90	286	287	135
Link Distance (ft)	64	64	64	64	2313		258	258	258
Upstream Blk Time (%)	8	60	57	0			6	6	
Queuing Penalty (veh)	21	168	158	0			26	26	
Storage Bay Dist (ft)						100			
Storage Blk Time (%)					0	2			
Queuing Penalty (veh)					0	0			

Intersection: 20: 3600 West & 2100 North EB, Interval #2

Movement	EB	EB	EB	EB	NB	NB	SB	SB	SB
Directions Served	L	T	T	R	T	R	L	L	T
Maximum Queue (ft)	99	141	139	45	55	94	254	249	118
Average Queue (ft)	51	130	129	17	17	46	201	197	68
95th Queue (ft)	97	144	140	46	53	93	273	270	129
Link Distance (ft)	64	64	64	64	2313		258	258	258
Upstream Blk Time (%)	10	68	66	0			2	1	
Queuing Penalty (veh)	29	205	198	1			9	6	
Storage Bay Dist (ft)						100			
Storage Blk Time (%)					0	1			
Queuing Penalty (veh)					0	0			

Intersection: 20: 3600 West & 2100 North EB, Interval #3

Movement	EB	EB	EB	EB	NB	NB	SB	SB	SB
Directions Served	L	T	T	R	T	R	L	L	T
Maximum Queue (ft)	100	139	137	37	48	72	255	252	106
Average Queue (ft)	59	129	129	19	12	33	213	210	64
95th Queue (ft)	109	140	141	46	46	72	285	290	122
Link Distance (ft)	64	64	64	64	2313		258	258	258
Upstream Blk Time (%)	12	64	62	0			5	7	
Queuing Penalty (veh)	32	178	174	0			24	33	
Storage Bay Dist (ft)						100			
Storage Blk Time (%)					0	0			
Queuing Penalty (veh)					0	0			

Intersection: 20: 3600 West & 2100 North EB, Interval #4

Movement	EB	EB	EB	EB	NB	NB	SB	SB	SB
Directions Served	L	T	T	R	T	R	L	L	T
Maximum Queue (ft)	84	136	136	37	68	94	255	249	117
Average Queue (ft)	41	129	129	19	19	43	200	200	71
95th Queue (ft)	86	138	140	42	64	94	284	289	122
Link Distance (ft)	64	64	64	64	2313		258	258	258
Upstream Blk Time (%)	7	65	61	0			5	4	
Queuing Penalty (veh)	19	183	170	0			21	19	
Storage Bay Dist (ft)						100			
Storage Blk Time (%)					0	2			
Queuing Penalty (veh)					0	0			

Intersection: 20: 3600 West & 2100 North EB, All Intervals

Movement	EB	EB	EB	EB	NB	NB	SB	SB	SB
Directions Served	L	T	T	R	T	R	L	L	T
Maximum Queue (ft)	113	149	156	50	92	115	272	269	148
Average Queue (ft)	51	129	129	18	14	41	204	202	69
95th Queue (ft)	100	140	141	44	51	88	283	285	128
Link Distance (ft)	64	64	64	64	2313		258	258	258
Upstream Blk Time (%)	9	65	62	0			4	5	
Queuing Penalty (veh)	25	183	175	0			20	21	
Storage Bay Dist (ft)						100			
Storage Blk Time (%)					0	1			
Queuing Penalty (veh)					0	0			

Intersection: 22: 2100 North WB, Interval #1

Movement	WB	WB	WB	WB
Directions Served	LT	T	T	T
Maximum Queue (ft)	113	518	686	236
Average Queue (ft)	26	292	293	87
95th Queue (ft)	155	813	812	275
Link Distance (ft)		2054	2054	
Upstream Blk Time (%)		0	0	
Queuing Penalty (veh)		0	0	
Storage Bay Dist (ft)	200			150
Storage Blk Time (%)	1	15	20	1
Queuing Penalty (veh)	4	137	127	9

Intersection: 22: 2100 North WB, Interval #2

Movement	WB	WB	WB	WB
Directions Served	LT	T	T	T
Maximum Queue (ft)	206	926	946	316
Average Queue (ft)	48	349	354	117
95th Queue (ft)	259	745	754	352
Link Distance (ft)		2054	2054	
Upstream Blk Time (%)		0	0	
Queuing Penalty (veh)		0	0	
Storage Bay Dist (ft)	200			150
Storage Blk Time (%)	0	28	33	2
Queuing Penalty (veh)	3	271	224	13

Intersection: 22: 2100 North WB, Interval #3

Movement	WB	WB	WB	WB
Directions Served	LT	T	T	T
Maximum Queue (ft)	214	773	752	373
Average Queue (ft)	83	450	459	233
95th Queue (ft)	381	946	979	520
Link Distance (ft)		2054	2054	
Upstream Blk Time (%)		0	0	
Queuing Penalty (veh)		0	0	
Storage Bay Dist (ft)	200			150
Storage Blk Time (%)		31	36	7
Queuing Penalty (veh)		281	223	41

Intersection: 22: 2100 North WB, Interval #4

Movement	WB	WB	WB	WB
Directions Served	LT	T	T	T
Maximum Queue (ft)	118	751	603	289
Average Queue (ft)	28	352	339	124
95th Queue (ft)	199	887	757	363
Link Distance (ft)		2054	2054	
Upstream Blk Time (%)		0	0	
Queuing Penalty (veh)		0	0	
Storage Bay Dist (ft)	200			150
Storage Blk Time (%)		22	30	4
Queuing Penalty (veh)		206	190	25

Intersection: 22: 2100 North WB, All Intervals

Movement	WB	WB	WB	WB
Directions Served	LT	T	T	T
Maximum Queue (ft)	364	1501	1414	409
Average Queue (ft)	46	361	361	140
95th Queue (ft)	261	859	840	397
Link Distance (ft)		2054	2054	
Upstream Blk Time (%)		0	0	
Queuing Penalty (veh)		0	0	
Storage Bay Dist (ft)	200			150
Storage Blk Time (%)	0	24	30	4
Queuing Penalty (veh)	2	224	191	22

Intersection: 23: 2100 North EB, Interval #1

Movement	EB	EB	SE
Directions Served	T	T	L
Maximum Queue (ft)	24	25	214
Average Queue (ft)	3	3	158
95th Queue (ft)	25	22	274
Link Distance (ft)	84	84	270
Upstream Blk Time (%)	0	0	4
Queuing Penalty (veh)	1	0	10
Storage Bay Dist (ft)			
Storage Blk Time (%)			
Queuing Penalty (veh)			

Intersection: 23: 2100 North EB, Interval #2

Movement	EB	EB	SE
Directions Served	T	T	L
Maximum Queue (ft)	44	26	275
Average Queue (ft)	10	8	182
95th Queue (ft)	49	45	292
Link Distance (ft)	84	84	270
Upstream Blk Time (%)	0	0	4
Queuing Penalty (veh)	1	1	14
Storage Bay Dist (ft)			
Storage Blk Time (%)			
Queuing Penalty (veh)			

Intersection: 23: 2100 North EB, Interval #3

Movement	EB	EB	SE
Directions Served	T	T	L
Maximum Queue (ft)	28	42	257
Average Queue (ft)	7	9	176
95th Queue (ft)	44	51	279
Link Distance (ft)	84	84	270
Upstream Blk Time (%)	0	0	2
Queuing Penalty (veh)	2	1	5
Storage Bay Dist (ft)			
Storage Blk Time (%)			
Queuing Penalty (veh)			

Intersection: 23: 2100 North EB, Interval #4

Movement	EB	EB	SE
Directions Served	T	T	L
Maximum Queue (ft)	49	46	248
Average Queue (ft)	9	6	157
95th Queue (ft)	44	39	271
Link Distance (ft)	84	84	270
Upstream Blk Time (%)	0	0	2
Queuing Penalty (veh)	2	1	6
Storage Bay Dist (ft)			
Storage Blk Time (%)			
Queuing Penalty (veh)			

Intersection: 23: 2100 North EB, All Intervals

Movement	EB	EB	SE
Directions Served	T	T	L
Maximum Queue (ft)	83	84	282
Average Queue (ft)	7	7	168
95th Queue (ft)	42	41	280
Link Distance (ft)	84	84	270
Upstream Blk Time (%)	0	0	3
Queuing Penalty (veh)	1	1	9
Storage Bay Dist (ft)			
Storage Blk Time (%)			
Queuing Penalty (veh)			

Intersection: 24: 2100 North EB, Interval #1

Movement	EB	EB	EB	EB
Directions Served	LT	T	T	T
Maximum Queue (ft)	76	305	313	35
Average Queue (ft)	21	215	211	5
95th Queue (ft)	153	351	350	73
Link Distance (ft)		2002	2002	
Upstream Blk Time (%)				
Queuing Penalty (veh)				
Storage Bay Dist (ft)	150			150
Storage Blk Time (%)		25	22	
Queuing Penalty (veh)		76	61	

Intersection: 24: 2100 North EB, Interval #2

Movement	EB	EB	EB	EB
Directions Served	LT	T	T	T
Maximum Queue (ft)	209	450	449	140
Average Queue (ft)	65	325	318	30
95th Queue (ft)	289	564	550	192
Link Distance (ft)		2002	2002	
Upstream Blk Time (%)				
Queuing Penalty (veh)				
Storage Bay Dist (ft)	150			150
Storage Blk Time (%)		45	39	
Queuing Penalty (veh)		145	117	

Intersection: 24: 2100 North EB, Interval #3

Movement	EB	EB	EB	EB
Directions Served	LT	T	T	T
Maximum Queue (ft)	248	491	491	209
Average Queue (ft)	130	365	357	50
95th Queue (ft)	408	666	658	251
Link Distance (ft)		2002	2002	
Upstream Blk Time (%)				
Queuing Penalty (veh)				
Storage Bay Dist (ft)	150			150
Storage Blk Time (%)		44	41	
Queuing Penalty (veh)		134	114	

Intersection: 24: 2100 North EB, Interval #4

Movement	EB	EB	EB	EB
Directions Served	LT	T	T	T
Maximum Queue (ft)	70	397	403	70
Average Queue (ft)	45	284	274	25
95th Queue (ft)	238	617	601	173
Link Distance (ft)		2002	2002	
Upstream Blk Time (%)				
Queuing Penalty (veh)				
Storage Bay Dist (ft)	150			150
Storage Blk Time (%)		30	27	
Queuing Penalty (veh)		91	75	

Intersection: 24: 2100 North EB, All Intervals

Movement	EB	EB	EB	EB
Directions Served	LT	T	T	T
Maximum Queue (ft)	283	522	533	279
Average Queue (ft)	65	297	290	27
95th Queue (ft)	289	576	565	182
Link Distance (ft)		2002	2002	
Upstream Blk Time (%)				
Queuing Penalty (veh)				
Storage Bay Dist (ft)	150			150
Storage Blk Time (%)		36	32	
Queuing Penalty (veh)		111	92	

Intersection: 25: 2100 North WB, Interval #1

Movement	WB	WB	NW
Directions Served	T	T	L
Maximum Queue (ft)	6	3	36
Average Queue (ft)	1	0	10
95th Queue (ft)	12	6	37
Link Distance (ft)	70	70	273
Upstream Blk Time (%)	0		
Queuing Penalty (veh)	0		
Storage Bay Dist (ft)			
Storage Blk Time (%)			
Queuing Penalty (veh)			

Intersection: 25: 2100 North WB, Interval #2

Movement	WB	NW
Directions Served	T	L
Maximum Queue (ft)	3	41
Average Queue (ft)	0	15
95th Queue (ft)	6	44
Link Distance (ft)	70	273
Upstream Blk Time (%)		
Queuing Penalty (veh)		
Storage Bay Dist (ft)		
Storage Blk Time (%)		
Queuing Penalty (veh)		

Intersection: 25: 2100 North WB, Interval #3

Movement	WB	NW
Directions Served	T	L
Maximum Queue (ft)	3	35
Average Queue (ft)	0	8
95th Queue (ft)	6	32
Link Distance (ft)	70	273
Upstream Blk Time (%)		
Queuing Penalty (veh)		
Storage Bay Dist (ft)		
Storage Blk Time (%)		
Queuing Penalty (veh)		

Intersection: 25: 2100 North WB, Interval #4

Movement	WB	NW
Directions Served	T	L
Maximum Queue (ft)	11	28
Average Queue (ft)	2	11
95th Queue (ft)	17	33
Link Distance (ft)	70	273
Upstream Blk Time (%)	0	
Queuing Penalty (veh)	0	
Storage Bay Dist (ft)		
Storage Blk Time (%)		
Queuing Penalty (veh)		

Intersection: 25: 2100 North WB, All Intervals

Movement	WB	WB	NW
Directions Served	T	T	L
Maximum Queue (ft)	6	17	50
Average Queue (ft)	0	1	11
95th Queue (ft)	6	10	37
Link Distance (ft)	70	70	273
Upstream Blk Time (%)	0	0	
Queuing Penalty (veh)	0	0	
Storage Bay Dist (ft)			
Storage Blk Time (%)			
Queuing Penalty (veh)			

Intersection: 29: , Interval #1

Movement
Directions Served
Maximum Queue (ft)
Average Queue (ft)
95th Queue (ft)
Link Distance (ft)
Upstream Blk Time (%)
Queuing Penalty (veh)
Storage Bay Dist (ft)
Storage Blk Time (%)
Queuing Penalty (veh)

Intersection: 29: , Interval #2

Movement
Directions Served
Maximum Queue (ft)
Average Queue (ft)
95th Queue (ft)
Link Distance (ft)
Upstream Blk Time (%)
Queuing Penalty (veh)
Storage Bay Dist (ft)
Storage Blk Time (%)
Queuing Penalty (veh)

Intersection: 29: , Interval #3

Movement
Directions Served
Maximum Queue (ft)
Average Queue (ft)
95th Queue (ft)
Link Distance (ft)
Upstream Blk Time (%)
Queuing Penalty (veh)
Storage Bay Dist (ft)
Storage Blk Time (%)
Queuing Penalty (veh)

Intersection: 29: , Interval #4

Movement
Directions Served
Maximum Queue (ft)
Average Queue (ft)
95th Queue (ft)
Link Distance (ft)
Upstream Blk Time (%)
Queuing Penalty (veh)
Storage Bay Dist (ft)
Storage Blk Time (%)
Queuing Penalty (veh)

Intersection: 29: , All Intervals

Movement
Directions Served
Maximum Queue (ft)
Average Queue (ft)
95th Queue (ft)
Link Distance (ft)
Upstream Blk Time (%)
Queuing Penalty (veh)
Storage Bay Dist (ft)
Storage Blk Time (%)
Queuing Penalty (veh)

Intersection: 31: 400 East & Crossroads Blvd, Interval #1

Movement	EB	WB	NB	SB	SB
Directions Served	LT	LT	LTR	LT	R
Maximum Queue (ft)	131	187	58	68	53
Average Queue (ft)	42	70	26	35	24
95th Queue (ft)	133	215	58	82	53
Link Distance (ft)	649	1678	460	747	
Upstream Blk Time (%)					
Queuing Penalty (veh)					
Storage Bay Dist (ft)					100
Storage Blk Time (%)	1	3		1	0
Queuing Penalty (veh)	0	1		1	0

Intersection: 31: 400 East & Crossroads Blvd, Interval #2

Movement	EB	WB	WB	NB	SB	SB
Directions Served	LT	LT	R	LTR	LT	R
Maximum Queue (ft)	186	164	2	56	78	48
Average Queue (ft)	62	59	0	29	41	24
95th Queue (ft)	206	163	4	68	92	50
Link Distance (ft)	649	1678		460	747	
Upstream Blk Time (%)						
Queuing Penalty (veh)						
Storage Bay Dist (ft)			100			100
Storage Blk Time (%)	1	2			3	
Queuing Penalty (veh)	0	1			1	

Intersection: 31: 400 East & Crossroads Blvd, Interval #3

Movement	EB	WB	WB	NB	SB	SB
Directions Served	LT	LT	R	LTR	LT	R
Maximum Queue (ft)	199	191	4	48	69	43
Average Queue (ft)	59	75	1	28	39	23
95th Queue (ft)	182	207	6	56	79	43
Link Distance (ft)	649	1678		460	747	
Upstream Blk Time (%)						
Queuing Penalty (veh)						
Storage Bay Dist (ft)			100			100
Storage Blk Time (%)	2	4			0	
Queuing Penalty (veh)	0	1			0	

Intersection: 31: 400 East & Crossroads Blvd, Interval #4

Movement	EB	WB	WB	NB	SB	SB
Directions Served	LT	LT	R	LTR	LT	R
Maximum Queue (ft)	113	184	2	58	66	48
Average Queue (ft)	32	58	0	30	29	23
95th Queue (ft)	112	173	4	63	69	50
Link Distance (ft)	649	1678		460	747	
Upstream Blk Time (%)						
Queuing Penalty (veh)						
Storage Bay Dist (ft)			100			100
Storage Blk Time (%)	1	3			0	0
Queuing Penalty (veh)	0	1			0	0

Intersection: 31: 400 East & Crossroads Blvd, All Intervals

Movement	EB	WB	WB	NB	SB	SB
Directions Served	LT	LT	R	LTR	LT	R
Maximum Queue (ft)	228	280	8	74	96	67
Average Queue (ft)	49	65	0	28	36	24
95th Queue (ft)	163	191	4	62	81	49
Link Distance (ft)	649	1678		460	747	
Upstream Blk Time (%)						
Queuing Penalty (veh)						
Storage Bay Dist (ft)			100			100
Storage Blk Time (%)	1	3			1	0
Queuing Penalty (veh)	0	1			1	0

Intersection: 34: Crossroads Blvd, Interval #1

Movement
Directions Served
Maximum Queue (ft)
Average Queue (ft)
95th Queue (ft)
Link Distance (ft)
Upstream Blk Time (%)
Queuing Penalty (veh)
Storage Bay Dist (ft)
Storage Blk Time (%)
Queuing Penalty (veh)

Intersection: 34: Crossroads Blvd, Interval #2

Movement	EB	EB
Directions Served	T	T
Maximum Queue (ft)	90	90
Average Queue (ft)	13	13
95th Queue (ft)	190	189
Link Distance (ft)	901	901
Upstream Blk Time (%)		0
Queuing Penalty (veh)		0
Storage Bay Dist (ft)		
Storage Blk Time (%)		
Queuing Penalty (veh)		

Intersection: 34: Crossroads Blvd, Interval #3

Movement
Directions Served
Maximum Queue (ft)
Average Queue (ft)
95th Queue (ft)
Link Distance (ft)
Upstream Blk Time (%)
Queuing Penalty (veh)
Storage Bay Dist (ft)
Storage Blk Time (%)
Queuing Penalty (veh)

Intersection: 34: Crossroads Blvd, Interval #4

Movement	EB	EB
Directions Served	T	T
Maximum Queue (ft)	91	88
Average Queue (ft)	13	13
95th Queue (ft)	191	184
Link Distance (ft)	901	901
Upstream Blk Time (%)	0	
Queuing Penalty (veh)	0	
Storage Bay Dist (ft)		
Storage Blk Time (%)		
Queuing Penalty (veh)		

Intersection: 34: Crossroads Blvd, All Intervals

Movement	EB	EB
Directions Served	T	T
Maximum Queue (ft)	181	178
Average Queue (ft)	6	6
95th Queue (ft)	132	130
Link Distance (ft)	901	901
Upstream Blk Time (%)	0	0
Queuing Penalty (veh)	0	0
Storage Bay Dist (ft)		
Storage Blk Time (%)		
Queuing Penalty (veh)		

Intersection: 38: , Interval #1

Movement	EB	EB	NB	NB	NB	NB	SB	SB	SB
Directions Served	L	R	L	L	T	T	T	T	R
Maximum Queue (ft)	243	246	139	148	79	86	978	990	350
Average Queue (ft)	173	170	93	105	26	36	612	644	198
95th Queue (ft)	304	266	152	161	85	94	1014	1064	454
Link Distance (ft)	952	952			1022	1022	2130	2130	
Upstream Blk Time (%)									
Queuing Penalty (veh)									
Storage Bay Dist (ft)			200	200					150
Storage Blk Time (%)			0	0				28	
Queuing Penalty (veh)			0	0				69	

Intersection: 38: , Interval #2

Movement	EB	EB	NB	NB	NB	NB	SB	SB	SB
Directions Served	L	R	L	L	T	T	T	T	R
Maximum Queue (ft)	348	257	158	165	77	70	1881	1903	350
Average Queue (ft)	253	177	104	112	24	34	1490	1502	219
95th Queue (ft)	410	281	171	179	75	80	2217	2239	466
Link Distance (ft)	952	952			1022	1022	2130	2130	
Upstream Blk Time (%)							5	10	
Queuing Penalty (veh)							0	0	
Storage Bay Dist (ft)			200	200					150
Storage Blk Time (%)			1	1				32	
Queuing Penalty (veh)			4	7				84	

Intersection: 38: , Interval #3

Movement	EB	EB	NB	NB	NB	NB	SB	SB	SB
Directions Served	L	R	L	L	T	T	T	T	R
Maximum Queue (ft)	396	291	153	153	71	74	2081	2088	350
Average Queue (ft)	317	169	104	115	27	34	1991	2008	245
95th Queue (ft)	551	294	164	166	80	78	2524	2533	482
Link Distance (ft)	952	952			1022	1022	2130	2130	
Upstream Blk Time (%)							18	32	
Queuing Penalty (veh)							0	0	
Storage Bay Dist (ft)			200	200					150
Storage Blk Time (%)								32	
Queuing Penalty (veh)								78	

Intersection: 38: , Interval #4

Movement	EB	EB	NB	NB	NB	NB	SB	SB	SB
Directions Served	L	R	L	L	T	T	T	T	R
Maximum Queue (ft)	376	237	161	173	62	76	2095	2142	350
Average Queue (ft)	312	173	96	107	22	38	2023	2072	240
95th Queue (ft)	624	255	161	169	63	82	2399	2364	476
Link Distance (ft)	952	952			1022	1022	2130	2130	
Upstream Blk Time (%)							19	33	
Queuing Penalty (veh)							0	0	
Storage Bay Dist (ft)			200	200					150
Storage Blk Time (%)			1	1				31	
Queuing Penalty (veh)			5	8				76	

Intersection: 38: , All Intervals

Movement	EB	EB	NB	NB	NB	NB	SB	SB	SB
Directions Served	L	R	L	L	T	T	T	T	R
Maximum Queue (ft)	443	315	183	191	109	106	2126	2159	350
Average Queue (ft)	264	172	99	110	25	36	1529	1557	226
95th Queue (ft)	504	275	162	169	76	84	2607	2633	472
Link Distance (ft)	952	952			1022	1022	2130	2130	
Upstream Blk Time (%)							10	19	
Queuing Penalty (veh)							0	0	
Storage Bay Dist (ft)			200	200					150
Storage Blk Time (%)			0	1				31	
Queuing Penalty (veh)			2	4				77	

Network Summary

Network wide Queuing Penalty, Interval #1: 2120
Network wide Queuing Penalty, Interval #2: 3134
Network wide Queuing Penalty, Interval #3: 3080
Network wide Queuing Penalty, Interval #4: 2828
Network wide Queuing Penalty, All Intervals: 2791

HALES ENGINEERING
innovative transportation solutions

SimTraffic LOS Report

Project: Saratoga Springs - Cold Spring Ranch
Analysis Period: *Future (2020) Plus Project*
Time Period: *Evening Peak Hour* **Project #:** *UT16-928*

Intersection: Redwood Road & Crossroads Blvd
Type: Signalized

Approach	Movement	Demand Volume	Volume Served		Delay/Veh (sec)	
			Avg	%	Avg	LOS
NB	L	305	326	107	72.5	*E*
	T	935	938	100	41.8	*D*
	R	170	177	104	6.0	*A*
	Subtotal	1,410	1,441	102	44.3	*D*
SB	L	340	289	85	83.2	*F*
	T	1,579	1,306	83	75.0	*E*
	R	655	550	84	14.6	*B*
	Subtotal	2,574	2,145	83	60.6	*E*
EB	L	450	458	102	59.2	*E*
	T	281	281	100	40.7	*D*
	R	35	38	109	15.6	*B*
	Subtotal	766	777	101	50.4	*D*
WB	L	257	257	100	57.9	*E*
	T	476	488	102	48.3	*D*
	R	205	207	101	18.4	*B*
	Subtotal	938	952	101	44.4	*D*
Total		5,688	5,315	93	51.9	*D*

Intersection: Redwood Road & Commerce Drive
Type: Signalized

Approach	Movement	Demand Volume	Volume Served		Delay/Veh (sec)	
			Avg	%	Avg	LOS
NB	L	100	102	102	78.7	*E*
	T	1,520	1,515	100	28.9	*C*
	R	30	28	94	11.4	*B*
	Subtotal	1,650	1,645	100	31.7	*C*
SB	L	130	116	89	58.5	*E*
	T	2,438	2,004	82	26.6	*C*
	R	395	340	86	16.4	*B*
	Subtotal	2,963	2,460	83	26.7	*C*
EB	L	190	192	101	61.6	*E*
	T	55	56	102	48.2	*D*
	R	110	117	106	22.1	*C*
	Subtotal	355	365	103	46.9	*D*
WB	L	25	26	103	54.4	*D*
	T	35	36	104	46.2	*D*
	R	80	81	101	20.6	*C*
	Subtotal	140	143	102	33.2	*C*
Total		5,108	4,613	90	30.3	*C*

HALES ENGINEERING
innovative transportation solutions

SimTraffic LOS Report

Project: Saratoga Springs - Cold Spring Ranch
Analysis Period: *Future (2020) Plus Project*
Time Period: *Evening Peak Hour* **Project #:** *UT16-928*

Intersection: Redwood Road & Aspen Hills Blvd
Type: Signalized

Approach	Movement	Demand Volume	Volume Served		Delay/Veh (sec)	
			Avg	%	Avg	LOS
NB	L	30	28	94	210.5	*F*
	T	1,561	1,537	98	25.2	*C*
	R	161	163	101	10.7	*B*
	Subtotal	1,752	1,728	99	26.8	*C*
SB	L	270	223	83	65.3	*E*
	T	2,756	2,271	82	44.8	*D*
	R	75	64	85	26.7	*C*
	Subtotal	3,101	2,558	82	46.1	*D*
EB	L	10	11	110	58.2	*E*
	R	25	27	107	47.2	*D*
	Subtotal	35	38	109	50.4	*D*
WB	L	265	273	103	71.7	*E*
	R	270	272	101	28.2	*C*
	Subtotal	535	545	102	50.0	*D*
Total		5,423	4,869	90	39.9	*D*

Intersection: Redwood Road & Sergeant Court Drive
Type: Unsignalized

Approach	Movement	Demand Volume	Volume Served		Delay/Veh (sec)	
			Avg	%	Avg	LOS
NB	L	20	22	109	140.7	*F*
	T	1,646	1,644	100	5.3	*A*
	R	124	124	100	4.1	*A*
	Subtotal	1,790	1,790	100	6.9	*A*
SB	L	190	163	86	45.6	*E*
	T	2,835	2,374	84	20.9	*C*
	R	20	18	89	18.6	*C*
	Subtotal	3,045	2,555	84	22.5	*C*
EB	L	5	4	80	888.7	*F*
	R	25	22	87	244.5	*F*
	Subtotal	***30***	***26***	***87***	***343.6***	***F***
WB	L	10	2	20	1309.7	*F*
	R	160	150	94	35.9	*E*
	Subtotal	170	152	89	52.7	*F*
Total		5,036	4,523	90	21.9	*C*

HALES ENGINEERING
innovative transportation solutions

SimTraffic LOS Report

Project: Saratoga Springs - Cold Spring Ranch
Analysis Period: *Future (2020) Plus Project*
Time Period: *Evening Peak Hour* **Project #:** *UT16-928*

Intersection: 3600 West & 2100 North WB
Type: Signalized

Approach	Movement	Demand Volume	Volume Served		Delay/Veh (sec)	
			Avg	%	Avg	LOS
NB	L	56	53	95	87.0	*F*
	T	75	74	98	58.4	*E*
	Subtotal	131	127	97	70.3	*E*
SB	T	1,275	1,263	99	49.8	*D*
	R	150	148	99	25.2	*C*
	Subtotal	1,425	1,411	99	47.2	*D*
WB	L	268	259	97	22.0	*C*
	T	1,500	1,494	100	17.3	*B*
	R	945	949	100	6.1	*A*
	Subtotal	2,713	2,702	100	13.8	*B*
Total		4,269	4,240	99	26.8	*C*

Intersection: 3600 West & 2100 North EB
Type: Signalized

Approach	Movement	Demand Volume	Volume Served		Delay/Veh (sec)	
			Avg	%	Avg	LOS
NB	T	56	58	104	48.4	*D*
	R	210	214	102	47.6	*D*
	Subtotal	266	272	102	47.8	*D*
SB	L	1,275	1,218	96	21.3	*C*
	T	268	303	113	26.8	*C*
	Subtotal	1,543	1,521	99	22.4	*C*
EB	L	75	70	93	39.2	*D*
	T	1,031	1,017	99	28.1	*C*
	R	94	98	105	6.2	*A*
	Subtotal	1,200	1,185	99	26.9	*C*
Total		3,009	2,978	99	26.6	*C*

HALES ENGINEERING
innovative transportation solutions

SimTraffic LOS Report

Project: **Saratoga Springs - Cold Spring Ranch**
Analysis Period: ***Future (2020) Plus Project***
Time Period: ***Evening Peak Hour*** **Project #:** ***UT16-928***

Intersection: **400 East & Crossroads Blvd**
Type: **Unsignalized**

Approach	Movement	Demand Volume	Volume Served		Delay/Veh (sec)	
			Avg	%	Avg	LOS
NB	L	10	10	98	133.5	*F*
	T	5	4	80	116.7	*F*
	R	35	35	101	42.4	*E*
	Subtotal	50	49	98	67.1	*F*
SB	L	49	44	90	270.1	*F*
	T	20	17	84	275.0	*F*
	R	62	58	94	76.4	*F*
	Subtotal	***131***	***119***	***91***	***176.4***	***F***
EB	L	56	50	89	16.1	*C*
	T	700	669	96	8.1	*A*
	R	15	13	85	2.4	*A*
	Subtotal	771	732	95	8.5	*A*
WB	L	60	56	93	14.7	*B*
	T	865	882	102	9.2	*A*
	R	68	70	103	4.5	*A*
	Subtotal	993	1,008	102	9.2	*A*
Total		1,946	1,908	98	22.0	*C*

2: Redwood Road & Crossroads Blvd Performance by movement Interval #1 5:00

Movement	EBL	EBT	EBR	WBL	WBT	WBR	NBL	NBT	NBR	SBL	SBT	SBR
Denied Delay (hr)	0.1	0.0	0.0	0.0	0.0	0.0	0.1	0.0	0.0	0.0	0.0	0.0
Denied Del/Veh (s)	2.5	0.3	2.5	0.0	0.0	0.0	2.5	0.5	2.5	0.2	0.0	0.0
Total Delay (hr)	1.7	0.7	0.0	1.0	1.5	0.3	1.6	2.3	0.1	1.4	3.8	0.4
Total Del/Veh (s)	50.6	35.8	15.1	52.9	44.6	17.8	62.2	34.8	5.1	65.8	39.6	11.2
Vehicles Entered	111	68	8	62	112	47	76	223	44	73	336	138
Vehicles Exited	114	70	8	65	115	49	81	211	44	71	311	133
Hourly Exit Rate	456	280	32	260	460	196	324	844	176	284	1244	532
Input Volume	442	276	34	252	468	201	300	919	167	334	1551	644
% of Volume	103	101	94	103	98	98	108	92	105	85	80	83

2: Redwood Road & Crossroads Blvd Performance by movement Interval #1 5:00

Movement	All
Denied Delay (hr)	0.2
Denied Del/Veh (s)	0.6
Total Delay (hr)	14.8
Total Del/Veh (s)	38.6
Vehicles Entered	1298
Vehicles Exited	1272
Hourly Exit Rate	5088
Input Volume	5588
% of Volume	91

2: Redwood Road & Crossroads Blvd Performance by movement Interval #2 5:15

Movement	EBL	EBT	EBR	WBL	WBT	WBR	NBL	NBT	NBR	SBL	SBT	SBR
Denied Delay (hr)	0.1	0.0	0.0	0.0	0.0	0.0	0.1	0.0	0.0	0.0	0.0	0.0
Denied Del/Veh (s)	2.5	0.3	3.0	0.0	0.0	0.0	2.4	0.6	2.4	0.6	0.1	0.1
Total Delay (hr)	2.2	0.9	0.0	1.2	1.8	0.3	1.7	3.4	0.1	1.8	5.7	0.5
Total Del/Veh (s)	62.0	38.6	12.7	57.8	46.0	18.0	66.2	44.9	7.5	77.5	56.7	12.2
Vehicles Entered	123	76	9	69	130	54	81	250	45	76	333	140
Vehicles Exited	122	78	10	69	134	52	80	251	44	67	312	140
Hourly Exit Rate	488	312	40	276	536	208	320	1004	176	268	1248	560
Input Volume	474	296	37	271	501	216	321	984	179	358	1662	689
% of Volume	103	105	108	102	107	96	100	102	98	75	75	81

2: Redwood Road & Crossroads Blvd Performance by movement Interval #2 5:15

Movement	All
Denied Delay (hr)	0.3
Denied Del/Veh (s)	0.7
Total Delay (hr)	19.6
Total Del/Veh (s)	47.1
Vehicles Entered	1386
Vehicles Exited	1359
Hourly Exit Rate	5436
Input Volume	5988
% of Volume	91

2: Redwood Road & Crossroads Blvd Performance by movement Interval #3 5:30

Movement	EBL	EBT	EBR	WBL	WBT	WBR	NBL	NBT	NBR	SBL	SBT	SBR
Denied Delay (hr)	0.1	0.0	0.0	0.0	0.0	0.0	0.1	0.0	0.0	0.0	0.0	0.0
Denied Del/Veh (s)	2.5	0.3	2.9	0.0	0.0	0.0	2.5	0.6	2.4	0.8	0.4	0.3
Total Delay (hr)	2.1	0.8	0.0	1.0	1.7	0.3	1.7	2.7	0.1	1.9	8.6	0.6
Total Del/Veh (s)	61.0	40.5	14.9	55.6	47.7	19.0	69.1	38.0	5.7	78.6	80.8	14.8
Vehicles Entered	114	68	10	62	122	52	79	232	45	72	333	138
Vehicles Exited	107	68	10	64	125	54	82	240	44	77	337	139
Hourly Exit Rate	428	272	40	256	500	216	328	960	176	308	1348	556
Input Volume	442	276	34	252	468	201	300	919	167	334	1551	644
% of Volume	97	99	118	102	107	107	109	104	105	92	87	86

2: Redwood Road & Crossroads Blvd Performance by movement Interval #3 5:30

Movement	All
Denied Delay (hr)	0.3
Denied Del/Veh (s)	0.8
Total Delay (hr)	21.6
Total Del/Veh (s)	53.0
Vehicles Entered	1327
Vehicles Exited	1347
Hourly Exit Rate	5388
Input Volume	5588
% of Volume	96

2: Redwood Road & Crossroads Blvd Performance by movement Interval #4 5:45

Movement	EBL	EBT	EBR	WBL	WBT	WBR	NBL	NBT	NBR	SBL	SBT	SBR
Denied Delay (hr)	0.1	0.0	0.0	0.0	0.0	0.0	0.1	0.0	0.0	0.0	0.1	0.0
Denied Del/Veh (s)	2.5	0.3	2.9	0.0	0.0	0.0	2.4	0.6	2.4	1.1	0.6	0.2
Total Delay (hr)	1.8	0.9	0.0	1.0	1.7	0.3	1.7	2.6	0.1	1.8	9.7	0.7
Total Del/Veh (s)	48.2	41.4	16.7	55.1	47.9	17.1	70.7	38.2	5.3	78.7	92.8	17.7
Vehicles Entered	114	72	10	62	124	53	81	230	43	73	330	134
Vehicles Exited	115	66	10	58	114	51	84	236	44	74	345	139
Hourly Exit Rate	460	264	40	232	456	204	336	944	176	296	1380	556
Input Volume	442	276	34	252	468	201	300	919	167	334	1551	644
% of Volume	104	96	118	92	97	101	112	103	105	89	89	86

2: Redwood Road & Crossroads Blvd Performance by movement Interval #4 5:45

Movement	All
Denied Delay (hr)	0.3
Denied Del/Veh (s)	0.8
Total Delay (hr)	22.3
Total Del/Veh (s)	55.5
Vehicles Entered	1326
Vehicles Exited	1336
Hourly Exit Rate	5344
Input Volume	5588
% of Volume	96

2: Redwood Road & Crossroads Blvd Performance by movement Entire Run

Movement	EBL	EBT	EBR	WBL	WBT	WBR	NBL	NBT	NBR	SBL	SBT	SBR
Denied Delay (hr)	0.3	0.0	0.0	0.0	0.0	0.0	0.2	0.2	0.1	0.1	0.1	0.0
Denied Del/Veh (s)	2.5	0.3	2.8	0.0	0.0	0.0	2.5	0.6	2.4	0.7	0.3	0.1
Total Delay (hr)	7.8	3.3	0.2	4.2	6.7	1.1	6.6	11.0	0.3	6.9	27.9	2.2
Total Del/Veh (s)	59.2	40.7	15.6	57.9	48.3	18.4	72.5	41.8	6.0	83.2	75.0	14.6
Vehicles Entered	463	283	38	256	487	206	317	936	177	294	1332	550
Vehicles Exited	458	281	38	257	488	207	326	938	177	289	1306	550
Hourly Exit Rate	458	281	38	257	488	207	326	938	177	289	1306	550
Input Volume	450	281	35	257	476	205	305	935	170	340	1579	655
% of Volume	102	100	109	100	102	101	107	100	104	85	83	84

2: Redwood Road & Crossroads Blvd Performance by movement Entire Run

Movement	All
Denied Delay (hr)	1.0
Denied Del/Veh (s)	0.7
Total Delay (hr)	78.2
Total Del/Veh (s)	51.9
Vehicles Entered	5339
Vehicles Exited	5315
Hourly Exit Rate	5315
Input Volume	5688
% of Volume	93

3: Redwood Road & Commerce Drive Performance by movement Interval #1 5:00

Movement	EBL	EBT	EBR	WBL	WBT	WBR	NBL	NBT	NBR	SBL	SBT	SBR
Denied Delay (hr)	0.0	0.0	0.0	0.0	0.0	0.0	0.0	0.0	0.0	0.0	0.1	0.0
Denied Del/Veh (s)	2.7	0.6	2.9	3.9	0.3	4.0	0.0	0.0	0.9	0.0	0.6	0.3
Total Delay (hr)	0.7	0.2	0.2	0.1	0.1	0.1	0.5	3.0	0.0	0.5	2.7	0.3
Total Del/Veh (s)	51.3	43.4	20.5	60.6	47.4	18.5	71.4	28.4	9.5	52.2	19.0	11.8
Vehicles Entered	44	14	28	6	10	18	22	363	4	30	507	85
Vehicles Exited	44	13	28	6	9	17	21	378	5	29	509	86
Hourly Exit Rate	176	52	112	24	36	68	84	1512	20	116	2036	344
Input Volume	187	54	108	25	34	79	98	1493	29	128	2396	388
% of Volume	94	96	104	96	106	86	86	101	69	91	85	89

3: Redwood Road & Commerce Drive Performance by movement Interval #1 5:00

Movement	All
Denied Delay (hr)	0.2
Denied Del/Veh (s)	0.6
Total Delay (hr)	8.4
Total Del/Veh (s)	25.6
Vehicles Entered	1131
Vehicles Exited	1145
Hourly Exit Rate	4580
Input Volume	5019
% of Volume	91

3: Redwood Road & Commerce Drive Performance by movement Interval #2 5:15

Movement	EBL	EBT	EBR	WBL	WBT	WBR	NBL	NBT	NBR	SBL	SBT	SBR
Denied Delay (hr)	0.0	0.0	0.0	0.0	0.0	0.0	0.0	0.0	0.0	0.0	0.2	0.0
Denied Del/Veh (s)	2.8	0.8	2.6	4.1	0.4	4.0	0.2	0.0	0.1	0.3	1.5	0.9
Total Delay (hr)	1.0	0.2	0.2	0.1	0.1	0.1	0.6	3.5	0.0	0.5	3.4	0.3
Total Del/Veh (s)	58.1	43.7	24.3	43.0	34.5	20.5	73.8	30.4	12.4	54.8	23.9	14.6
Vehicles Entered	52	14	34	6	8	22	25	407	8	31	507	82
Vehicles Exited	54	15	33	6	8	22	23	391	8	32	503	82
Hourly Exit Rate	216	60	132	24	32	88	92	1564	32	128	2012	328
Input Volume	200	58	116	26	37	84	105	1599	32	137	2566	416
% of Volume	108	103	114	92	86	105	88	98	100	93	78	79

3: Redwood Road & Commerce Drive Performance by movement Interval #2 5:15

Movement	All
Denied Delay (hr)	0.3
Denied Del/Veh (s)	1.0
Total Delay (hr)	10.1
Total Del/Veh (s)	29.4
Vehicles Entered	1196
Vehicles Exited	1177
Hourly Exit Rate	4708
Input Volume	5376
% of Volume	88

3: Redwood Road & Commerce Drive Performance by movement Interval #3 5:30

Movement	EBL	EBT	EBR	WBL	WBT	WBR	NBL	NBT	NBR	SBL	SBT	SBR
Denied Delay (hr)	0.0	0.0	0.0	0.0	0.0	0.0	0.0	0.0	0.0	0.0	0.8	0.1
Denied Del/Veh (s)	2.7	0.7	2.7	4.1	0.4	3.8	0.0	0.0	0.4	4.5	5.6	3.7
Total Delay (hr)	0.8	0.2	0.2	0.1	0.1	0.1	0.6	3.1	0.0	0.4	4.5	0.5
Total Del/Veh (s)	54.7	44.2	20.4	46.9	43.3	19.9	69.6	28.0	9.9	55.4	31.2	19.0
Vehicles Entered	46	14	28	7	10	21	27	379	8	26	506	84
Vehicles Exited	46	14	29	7	10	21	30	376	8	27	497	84
Hourly Exit Rate	184	56	116	28	40	84	120	1504	32	108	1988	336
Input Volume	187	54	108	25	34	79	98	1493	29	128	2396	388
% of Volume	98	104	107	112	118	106	122	101	110	84	83	87

3: Redwood Road & Commerce Drive Performance by movement Interval #3 5:30

Movement	All
Denied Delay (hr)	1.0
Denied Del/Veh (s)	3.1
Total Delay (hr)	10.6
Total Del/Veh (s)	31.6
Vehicles Entered	1156
Vehicles Exited	1149
Hourly Exit Rate	4596
Input Volume	5019
% of Volume	92

3: Redwood Road & Commerce Drive Performance by movement Interval #4 5:45

Movement	EBL	EBT	EBR	WBL	WBT	WBR	NBL	NBT	NBR	SBL	SBT	SBR
Denied Delay (hr)	0.0	0.0	0.0	0.0	0.0	0.0	0.0	0.0	0.0	0.0	1.7	0.2
Denied Del/Veh (s)	2.7	0.7	2.6	4.0	0.3	3.8	0.1	0.0	0.1	3.8	11.8	7.6
Total Delay (hr)	0.9	0.2	0.1	0.1	0.1	0.1	0.6	2.8	0.0	0.5	4.4	0.5
Total Del/Veh (s)	62.4	49.0	17.5	53.6	45.0	19.5	75.1	25.4	11.7	60.7	29.8	18.6
Vehicles Entered	46	13	27	7	9	21	28	380	8	28	511	89
Vehicles Exited	48	14	27	7	9	21	28	369	8	28	496	89
Hourly Exit Rate	192	56	108	28	36	84	112	1476	32	112	1984	356
Input Volume	187	54	108	25	34	79	98	1493	29	128	2396	388
% of Volume	103	104	100	112	106	106	114	99	110	88	83	92

3: Redwood Road & Commerce Drive Performance by movement Interval #4 5:45

Movement	All
Denied Delay (hr)	2.0
Denied Del/Veh (s)	6.2
Total Delay (hr)	10.4
Total Del/Veh (s)	30.5
Vehicles Entered	1167
Vehicles Exited	1144
Hourly Exit Rate	4576
Input Volume	5019
% of Volume	91

3: Redwood Road & Commerce Drive Performance by movement Entire Run

Movement	EBL	EBT	EBR	WBL	WBT	WBR	NBL	NBT	NBR	SBL	SBT	SBR
Denied Delay (hr)	0.1	0.0	0.1	0.0	0.0	0.1	0.0	0.0	0.0	0.1	2.8	0.3
Denied Del/Veh (s)	2.7	0.7	2.7	4.0	0.4	4.0	0.1	0.0	0.3	2.1	4.9	3.2
Total Delay (hr)	3.3	0.7	0.7	0.4	0.5	0.5	2.3	12.5	0.1	1.9	15.1	1.6
Total Del/Veh (s)	61.6	48.2	22.1	54.4	46.2	20.6	78.7	28.9	11.4	58.5	26.6	16.4
Vehicles Entered	188	55	117	26	36	81	102	1529	28	114	2031	340
Vehicles Exited	192	56	117	26	36	81	102	1515	28	116	2004	340
Hourly Exit Rate	192	56	117	26	36	81	102	1515	28	116	2004	340
Input Volume	190	55	110	25	35	80	100	1520	30	130	2438	395
% of Volume	101	102	106	103	104	101	102	100	94	89	82	86

3: Redwood Road & Commerce Drive Performance by movement Entire Run

Movement	All
Denied Delay (hr)	3.6
Denied Del/Veh (s)	2.7
Total Delay (hr)	39.5
Total Del/Veh (s)	30.3
Vehicles Entered	4647
Vehicles Exited	4613
Hourly Exit Rate	4613
Input Volume	5108
% of Volume	90

11: Redwood Road & Aspen Hills Blvd Performance by movement Interval #1 5:00

Movement	EBL	EBR	WBL	WBR	NBL	NBT	NBR	SBL	SBT	SBR	All
Denied Delay (hr)	0.0	0.0	0.1	0.1	0.0	0.0	0.0	0.0	0.0	0.0	0.1
Denied Del/Veh (s)	1.7	3.2	3.5	3.5	0.0	0.0	0.0	0.0	0.0	0.0	0.4
Total Delay (hr)	0.0	0.1	1.2	0.5	0.4	1.9	0.1	0.9	5.8	0.1	11.0
Total Del/Veh (s)	58.6	38.9	57.5	25.7	203.9	18.1	7.3	53.1	34.0	20.3	31.1
Vehicles Entered	3	6	65	65	7	379	39	57	577	14	1212
Vehicles Exited	3	6	66	64	5	373	39	54	574	15	1199
Hourly Exit Rate	12	24	264	256	20	1492	156	216	2296	60	4796
Input Volume	10	25	260	265	29	1534	158	265	2708	74	5328
% of Volume	120	96	102	97	69	97	99	82	85	81	90

11: Redwood Road & Aspen Hills Blvd Performance by movement Interval #2 5:15

Movement	EBL	EBR	WBL	WBR	NBL	NBT	NBR	SBL	SBT	SBR	All
Denied Delay (hr)	0.0	0.0	0.1	0.1	0.0	0.0	0.0	0.0	0.0	0.0	0.1
Denied Del/Veh (s)	2.3	3.0	3.5	3.4	0.0	0.0	0.0	0.0	0.0	0.0	0.4
Total Delay (hr)	0.1	0.1	1.7	0.6	0.5	3.2	0.1	1.0	6.6	0.1	13.9
Total Del/Veh (s)	49.4	46.1	73.4	26.1	169.7	27.9	11.9	57.9	39.2	22.5	37.8
Vehicles Entered	3	7	71	72	8	400	44	55	574	17	1251
Vehicles Exited	3	8	72	73	8	383	43	56	563	16	1225
Hourly Exit Rate	12	32	288	292	32	1532	172	224	2252	64	4900
Input Volume	10	26	279	284	32	1642	169	284	2902	79	5707
% of Volume	120	123	103	103	100	93	102	79	78	81	86

11: Redwood Road & Aspen Hills Blvd Performance by movement Interval #3 5:30

Movement	EBL	EBR	WBL	WBR	NBL	NBT	NBR	SBL	SBT	SBR	All
Denied Delay (hr)	0.0	0.0	0.1	0.1	0.0	0.0	0.0	0.0	0.0	0.0	0.1
Denied Del/Veh (s)	3.6	2.9	3.5	3.4	0.0	0.0	0.0	0.0	0.0	0.0	0.4
Total Delay (hr)	0.0	0.1	1.4	0.5	0.5	3.3	0.2	1.2	7.8	0.1	15.0
Total Del/Veh (s)	56.8	47.9	66.9	27.9	181.4	28.4	13.2	65.8	45.3	27.3	40.9
Vehicles Entered	2	6	66	66	7	387	39	57	570	16	1216
Vehicles Exited	3	6	70	67	7	396	40	60	571	17	1237
Hourly Exit Rate	12	24	280	268	28	1584	160	240	2284	68	4948
Input Volume	10	25	260	265	29	1534	158	265	2708	74	5328
% of Volume	120	96	108	101	97	103	101	91	84	92	93

11: Redwood Road & Aspen Hills Blvd Performance by movement Interval #4 5:45

Movement	EBL	EBR	WBL	WBR	NBL	NBT	NBR	SBL	SBT	SBR	All
Denied Delay (hr)	0.0	0.0	0.1	0.1	0.0	0.0	0.0	0.0	0.0	0.0	0.1
Denied Del/Veh (s)	2.8	3.4	3.4	3.6	0.0	0.0	0.0	0.0	0.0	0.0	0.4
Total Delay (hr)	0.0	0.1	1.3	0.5	0.4	2.4	0.1	1.1	8.7	0.1	14.9
Total Del/Veh (s)	51.6	42.5	66.9	28.2	173.3	21.9	8.9	68.5	51.0	32.3	41.5
Vehicles Entered	3	6	64	66	7	381	41	56	571	16	1211
Vehicles Exited	2	7	65	68	8	385	41	53	563	16	1208
Hourly Exit Rate	8	28	260	272	32	1540	164	212	2252	64	4832
Input Volume	10	25	260	265	29	1534	158	265	2708	74	5328
% of Volume	80	112	100	103	110	100	104	80	83	86	91

11: Redwood Road & Aspen Hills Blvd Performance by movement Entire Run

Movement	EBL	EBR	WBL	WBR	NBL	NBT	NBR	SBL	SBT	SBR	All
Denied Delay (hr)	0.0	0.0	0.3	0.3	0.0	0.0	0.0	0.0	0.0	0.0	0.5
Denied Del/Veh (s)	2.5	3.0	3.5	3.5	0.0	0.0	0.0	0.0	0.0	0.0	0.4
Total Delay (hr)	0.2	0.4	5.5	2.1	1.8	10.9	0.5	4.2	28.9	0.5	54.9
Total Del/Veh (s)	58.2	47.2	71.7	28.2	210.5	25.2	10.7	65.3	44.8	26.7	39.9
Vehicles Entered	11	26	266	269	29	1546	163	224	2291	63	4888
Vehicles Exited	11	27	273	272	28	1537	163	223	2271	64	4869
Hourly Exit Rate	11	27	273	272	28	1537	163	223	2271	64	4869
Input Volume	10	25	265	270	30	1561	161	270	2756	75	5423
% of Volume	110	107	103	101	94	98	101	83	82	85	90

13: Redwood Road & Sergeant Court Drive Performance by movement Interval #1 5:00

Movement	EBL	EBR	WBL	WBR	NBL	NBT	NBR	SBL	SBT	SBR	All
Denied Delay (hr)	0.0	0.0	0.0	0.0	0.0	0.0	0.0	0.0	0.0	0.0	0.0
Denied Del/Veh (s)	4.6	0.2	0.4	3.4	0.0	0.0	0.2	0.0	0.0	0.0	0.1
Total Delay (hr)	0.1	0.2	0.2	0.4	0.2	0.6	0.0	0.4	2.0	0.0	4.1
Total Del/Veh (s)	484.4	124.6	249.8	31.6	144.0	5.1	3.7	34.8	11.4	11.8	12.8
Vehicles Entered	1	6	3	41	5	407	29	40	601	4	1137
Vehicles Exited	0	5	1	38	4	401	28	38	593	4	1112
Hourly Exit Rate	0	20	4	152	16	1604	112	152	2372	16	4448
Input Volume	5	25	10	157	20	1617	122	187	2785	20	4948
% of Volume	0	80	40	97	80	99	92	81	85	80	90

13: Redwood Road & Sergeant Court Drive Performance by movement Interval #2 5:15

Movement	EBL	EBR	WBL	WBR	NBL	NBT	NBR	SBL	SBT	SBR	All
Denied Delay (hr)	0.0	0.0	0.0	0.0	0.0	0.0	0.0	0.0	0.0	0.0	0.0
Denied Del/Veh (s)	3.4	0.1	0.5	3.6	0.4	0.0	0.2	0.0	0.0	0.0	0.1
Total Delay (hr)	0.3	0.4	0.7	0.4	0.2	0.7	0.0	0.5	2.5	0.0	5.7
Total Del/Veh (s)	532.3	211.4	658.5	32.1	135.0	5.4	4.2	41.6	14.5	11.8	17.2
Vehicles Entered	1	6	3	37	5	433	34	40	599	4	1162
Vehicles Exited	1	5	1	38	5	427	33	40	590	4	1144
Hourly Exit Rate	4	20	4	152	20	1708	132	160	2360	16	4576
Input Volume	5	26	11	168	21	1731	131	200	2985	21	5299
% of Volume	80	77	36	90	95	99	101	80	79	76	86

13: Redwood Road & Sergeant Court Drive Performance by movement Interval #3 5:30

Movement	EBL	EBR	WBL	WBR	NBL	NBT	NBR	SBL	SBT	SBR	All
Denied Delay (hr)	0.0	0.0	0.0	0.0	0.0	0.0	0.0	0.0	0.0	0.0	0.0
Denied Del/Veh (s)	3.4	0.1	0.6	3.6	0.1	0.0	0.2	0.0	0.0	0.0	0.1
Total Delay (hr)	0.2	0.5	1.2	0.4	0.2	0.6	0.0	0.6	4.5	0.0	8.2
Total Del/Veh (s)	437.9	224.5	617.5	31.6	115.6	5.1	3.8	43.7	25.5	19.1	24.7
Vehicles Entered	1	6	3	38	6	405	30	42	600	5	1136
Vehicles Exited	1	6	1	39	6	408	30	44	591	5	1131
Hourly Exit Rate	4	24	4	156	24	1632	120	176	2364	20	4524
Input Volume	5	25	10	157	20	1617	122	187	2785	20	4948
% of Volume	80	96	40	99	120	101	98	94	85	100	91

13: Redwood Road & Sergeant Court Drive Performance by movement Interval #4 5:45

Movement	EBL	EBR	WBL	WBR	NBL	NBT	NBR	SBL	SBT	SBR	All
Denied Delay (hr)	0.0	0.0	0.0	0.0	0.0	0.0	0.0	0.0	0.0	0.0	0.0
Denied Del/Veh (s)	4.7	0.1	0.5	3.5	0.1	0.0	0.1	0.0	0.0	0.0	0.1
Total Delay (hr)	0.3	0.6	1.9	0.4	0.2	0.6	0.0	0.6	5.0	0.0	9.8
Total Del/Veh (s)	565.1	261.0	744.5	41.8	128.1	5.1	4.1	53.1	28.8	29.0	29.7
Vehicles Entered	1	6	3	37	6	399	32	40	589	5	1118
Vehicles Exited	1	5	0	34	6	408	33	41	600	5	1133
Hourly Exit Rate	4	20	0	136	24	1632	132	164	2400	20	4532
Input Volume	5	25	10	157	20	1617	122	187	2785	20	4948
% of Volume	80	80	0	87	120	101	108	88	86	100	92

13: Redwood Road & Sergeant Court Drive Performance by movement Entire Run

Movement	EBL	EBR	WBL	WBR	NBL	NBT	NBR	SBL	SBT	SBR	All
Denied Delay (hr)	0.0	0.0	0.0	0.2	0.0	0.0	0.0	0.0	0.0	0.0	0.2
Denied Del/Veh (s)	4.0	0.1	0.5	3.5	0.2	0.0	0.2	0.0	0.0	0.0	0.1
Total Delay (hr)	1.0	1.7	4.0	1.5	0.9	2.4	0.1	2.1	14.0	0.1	27.8
Total Del/Veh (s)	888.7	244.5	1309.7	35.9	140.7	5.3	4.1	45.6	20.9	18.6	21.9
Vehicles Entered	4	25	11	153	23	1644	124	163	2389	18	4554
Vehicles Exited	4	22	2	150	22	1644	124	163	2374	18	4523
Hourly Exit Rate	4	22	2	150	22	1644	124	163	2374	18	4523
Input Volume	5	25	10	160	20	1646	124	190	2835	20	5036
% of Volume	80	87	20	94	109	100	100	86	84	89	90

19: 3600 West & 2100 North WB Performance by movement Interval #1 5:00

Movement	WBL	WBT	WBR	NBL	NBT	SBT	SBR	All
Denied Delay (hr)	0.0	0.0	0.0	0.0	0.0	0.0	0.0	0.1
Denied Del/Veh (s)	0.0	0.0	0.0	0.0	0.0	0.3	2.3	0.2
Total Delay (hr)	0.3	1.7	0.4	0.3	0.3	3.6	0.2	6.8
Total Del/Veh (s)	19.2	15.5	5.7	77.5	54.0	39.7	22.3	22.5
Vehicles Entered	62	380	236	13	18	316	37	1062
Vehicles Exited	62	382	237	11	15	302	37	1046
Hourly Exit Rate	248	1528	948	44	60	1208	148	4184
Input Volume	263	1474	928	55	74	1253	147	4194
% of Volume	94	104	102	80	81	96	101	100

19: 3600 West & 2100 North WB Performance by movement Interval #2 5:15

Movement	WBL	WBT	WBR	NBL	NBT	SBT	SBR	All
Denied Delay (hr)	0.0	0.0	0.0	0.0	0.0	0.1	0.0	0.2
Denied Del/Veh (s)	0.0	0.0	0.0	0.0	0.0	1.5	3.4	0.6
Total Delay (hr)	0.4	1.9	0.4	0.4	0.3	4.6	0.2	8.3
Total Del/Veh (s)	23.2	18.5	6.5	78.8	48.2	46.9	23.0	27.0
Vehicles Entered	65	361	232	14	18	327	39	1056
Vehicles Exited	64	360	230	16	20	329	37	1056
Hourly Exit Rate	256	1440	920	64	80	1316	148	4224
Input Volume	282	1580	995	59	79	1342	158	4495
% of Volume	91	91	92	108	101	98	94	94

19: 3600 West & 2100 North WB Performance by movement Interval #3 5:30

Movement	WBL	WBT	WBR	NBL	NBT	SBT	SBR	All
Denied Delay (hr)	0.0	0.0	0.0	0.0	0.0	0.1	0.0	0.1
Denied Del/Veh (s)	0.0	0.0	0.0	0.0	0.0	0.7	2.8	0.3
Total Delay (hr)	0.4	1.8	0.4	0.3	0.3	5.5	0.3	9.0
Total Del/Veh (s)	21.2	16.0	5.8	80.3	59.9	57.1	29.9	28.6
Vehicles Entered	70	392	243	13	19	320	37	1094
Vehicles Exited	71	394	245	12	18	306	38	1084
Hourly Exit Rate	284	1576	980	48	72	1224	152	4336
Input Volume	263	1474	928	55	74	1253	147	4194
% of Volume	108	107	106	87	97	98	103	103

19: 3600 West & 2100 North WB Performance by movement Interval #4 5:45

Movement	WBL	WBT	WBR	NBL	NBT	SBT	SBR	All
Denied Delay (hr)	0.0	0.0	0.0	0.0	0.0	0.0	0.0	0.1
Denied Del/Veh (s)	0.0	0.0	0.0	0.0	0.0	0.5	2.5	0.2
Total Delay (hr)	0.4	1.9	0.4	0.3	0.3	4.1	0.2	7.7
Total Del/Veh (s)	21.9	18.4	6.2	76.9	54.7	42.1	21.7	25.2
Vehicles Entered	62	360	238	14	20	311	37	1042
Vehicles Exited	62	359	237	15	21	327	37	1058
Hourly Exit Rate	248	1436	948	60	84	1308	148	4232
Input Volume	263	1474	928	55	74	1253	147	4194
% of Volume	94	97	102	109	114	104	101	101

19: 3600 West & 2100 North WB Performance by movement Entire Run

Movement	WBL	WBT	WBR	NBL	NBT	SBT	SBR	All
Denied Delay (hr)	0.0	0.0	0.0	0.0	0.0	0.3	0.1	0.4
Denied Del/Veh (s)	0.0	0.0	0.0	0.0	0.0	0.8	2.8	0.3
Total Delay (hr)	1.6	7.2	1.6	1.3	1.2	17.8	1.1	31.8
Total Del/Veh (s)	22.0	17.3	6.1	87.0	58.4	49.8	25.2	26.8
Vehicles Entered	259	1494	950	53	75	1273	150	4254
Vehicles Exited	259	1494	949	53	74	1263	148	4240
Hourly Exit Rate	259	1494	949	53	74	1263	148	4240
Input Volume	268	1500	945	56	75	1275	150	4269
% of Volume	97	100	100	95	98	99	99	99

20: 3600 West & 2100 North EB Performance by movement Interval #1 5:00

Movement	EBL	EBT	EBR	NBT	NBR	SBL	SBT	All
Denied Delay (hr)	0.0	0.0	0.0	0.0	0.0	0.0	0.0	0.0
Denied Del/Veh (s)	0.0	0.0	0.0	0.4	1.7	0.0	0.0	0.1
Total Delay (hr)	0.2	1.8	0.0	0.2	0.6	1.6	0.6	5.0
Total Del/Veh (s)	33.4	24.2	4.9	41.7	38.9	19.8	26.3	23.7
Vehicles Entered	18	260	22	14	47	291	73	725
Vehicles Exited	18	265	22	12	48	288	73	726
Hourly Exit Rate	72	1060	88	48	192	1152	292	2904
Input Volume	74	1013	92	55	206	1253	263	2956
% of Volume	97	105	96	87	93	92	111	98

20: 3600 West & 2100 North EB Performance by movement Interval #2 5:15

Movement	EBL	EBT	EBR	NBT	NBR	SBL	SBT	All
Denied Delay (hr)	0.0	0.0	0.0	0.0	0.0	0.0	0.0	0.0
Denied Del/Veh (s)	0.0	0.2	0.0	0.4	1.7	0.0	0.0	0.2
Total Delay (hr)	0.2	2.1	0.1	0.2	0.8	1.8	0.6	5.7
Total Del/Veh (s)	37.2	30.1	7.6	45.9	46.8	19.9	25.7	26.3
Vehicles Entered	17	243	26	15	57	318	75	751
Vehicles Exited	16	238	27	16	54	319	75	745
Hourly Exit Rate	64	952	108	64	216	1276	300	2980
Input Volume	79	1085	99	59	221	1342	282	3167
% of Volume	81	88	109	108	98	95	106	94

20: 3600 West & 2100 North EB Performance by movement Interval #3 5:30

Movement	EBL	EBT	EBR	NBT	NBR	SBL	SBT	All
Denied Delay (hr)	0.0	0.0	0.0	0.0	0.0	0.0	0.0	0.1
Denied Del/Veh (s)	0.0	0.5	0.0	0.4	1.8	0.0	0.0	0.3
Total Delay (hr)	0.2	2.1	0.0	0.2	0.8	2.1	0.6	6.0
Total Del/Veh (s)	38.3	26.1	6.5	42.2	45.8	24.4	27.6	27.2
Vehicles Entered	17	272	24	14	55	296	81	759
Vehicles Exited	18	276	24	14	57	293	78	760
Hourly Exit Rate	72	1104	96	56	228	1172	312	3040
Input Volume	74	1013	92	55	206	1253	263	2956
% of Volume	97	109	104	102	111	94	119	103

20: 3600 West & 2100 North EB Performance by movement Interval #4 5:45

Movement	EBL	EBT	EBR	NBT	NBR	SBL	SBT	All
Denied Delay (hr)	0.0	0.0	0.0	0.0	0.0	0.0	0.0	0.0
Denied Del/Veh (s)	0.0	0.2	0.0	0.3	1.7	0.0	0.0	0.2
Total Delay (hr)	0.2	2.1	0.0	0.2	0.7	1.7	0.5	5.6
Total Del/Veh (s)	41.6	29.7	5.5	51.0	45.1	19.1	24.0	25.7
Vehicles Entered	19	242	26	15	54	314	74	744
Vehicles Exited	18	239	26	16	55	319	76	749
Hourly Exit Rate	72	956	104	64	220	1276	304	2996
Input Volume	74	1013	92	55	206	1253	263	2956
% of Volume	97	94	113	116	107	102	116	101

20: 3600 West & 2100 North EB Performance by movement Entire Run

Movement	EBL	EBT	EBR	NBT	NBR	SBL	SBT	All
Denied Delay (hr)	0.0	0.1	0.0	0.0	0.1	0.0	0.0	0.2
Denied Del/Veh (s)	0.0	0.2	0.0	0.4	1.7	0.0	0.0	0.2
Total Delay (hr)	0.8	8.0	0.2	0.8	2.9	7.3	2.3	22.2
Total Del/Veh (s)	39.2	28.1	6.2	48.4	47.6	21.3	26.8	26.6
Vehicles Entered	71	1018	98	58	213	1220	303	2981
Vehicles Exited	70	1017	98	58	214	1218	303	2978
Hourly Exit Rate	70	1017	98	58	214	1218	303	2978
Input Volume	75	1031	94	56	210	1275	268	3009
% of Volume	93	99	105	104	102	96	113	99

22: 2100 North WB Performance by movement Interval #1 5:00

Movement	WBL	WBT	All
Denied Delay (hr)	0.2	2.1	2.3
Denied Del/Veh (s)	11.1	11.2	11.2
Total Delay (hr)	0.3	5.9	6.2
Total Del/Veh (s)	16.3	29.5	28.3
Vehicles Entered	67	669	736
Vehicles Exited	68	679	747
Hourly Exit Rate	272	2716	2988
Input Volume	295	2665	2960
% of Volume	92	102	101

22: 2100 North WB Performance by movement Interval #2 5:15

Movement	WBL	WBT	All
Denied Delay (hr)	0.7	6.7	7.5
Denied Del/Veh (s)	32.1	33.3	33.2
Total Delay (hr)	0.6	8.2	8.8
Total Del/Veh (s)	25.6	40.7	39.3
Vehicles Entered	75	687	762
Vehicles Exited	70	658	728
Hourly Exit Rate	280	2632	2912
Input Volume	316	2856	3172
% of Volume	89	92	92

22: 2100 North WB Performance by movement Interval #3 5:30

Movement	WBL	WBT	All
Denied Delay (hr)	1.2	10.1	11.2
Denied Del/Veh (s)	52.1	50.7	50.8
Total Delay (hr)	0.7	7.9	8.6
Total Del/Veh (s)	27.9	38.0	37.0
Vehicles Entered	76	681	757
Vehicles Exited	78	706	784
Hourly Exit Rate	312	2824	3136
Input Volume	295	2665	2960
% of Volume	106	106	106

22: 2100 North WB Performance by movement Interval #4 5:45

Movement	WBL	WBT	All
Denied Delay (hr)	0.8	7.6	8.4
Denied Del/Veh (s)	35.9	39.0	38.7
Total Delay (hr)	0.6	8.1	8.6
Total Del/Veh (s)	25.2	40.5	38.8
Vehicles Entered	77	673	750
Vehicles Exited	78	661	739
Hourly Exit Rate	312	2644	2956
Input Volume	295	2665	2960
% of Volume	106	99	100

22: 2100 North WB Performance by movement Entire Run

Movement	WBL	WBT	All
Denied Delay (hr)	2.9	26.5	29.4
Denied Del/Veh (s)	34.8	34.9	34.9
Total Delay (hr)	2.1	30.1	32.2
Total Del/Veh (s)	25.3	39.3	37.9
Vehicles Entered	295	2710	3005
Vehicles Exited	295	2704	2999
Hourly Exit Rate	295	2704	2999
Input Volume	300	2713	3013
% of Volume	98	100	100

23: 2100 North EB Performance by movement Interval #1 5:00

Movement	EBT	SEL	All
Denied Delay (hr)	0.0	0.0	0.0
Denied Del/Veh (s)	0.0	0.0	0.0
Total Delay (hr)	0.4	0.8	1.2
Total Del/Veh (s)	2.4	38.5	6.3
Vehicles Entered	601	68	669
Vehicles Exited	599	69	668
Hourly Exit Rate	2396	276	2672
Input Volume	2471	295	2766
% of Volume	97	94	97

23: 2100 North EB Performance by movement Interval #2 5:15

Movement	EBT	SEL	All
Denied Delay (hr)	0.0	0.0	0.0
Denied Del/Veh (s)	0.0	0.0	0.0
Total Delay (hr)	0.4	0.9	1.3
Total Del/Veh (s)	2.3	43.6	6.8
Vehicles Entered	610	70	680
Vehicles Exited	612	69	681
Hourly Exit Rate	2448	276	2724
Input Volume	2647	316	2963
% of Volume	92	87	92

23: 2100 North EB Performance by movement Interval #3 5:30

Movement	EBT	SEL	All
Denied Delay (hr)	0.0	0.0	0.0
Denied Del/Veh (s)	0.0	0.0	0.0
Total Delay (hr)	0.5	1.1	1.6
Total Del/Veh (s)	2.6	49.4	8.0
Vehicles Entered	625	78	703
Vehicles Exited	624	76	700
Hourly Exit Rate	2496	304	2800
Input Volume	2471	295	2766
% of Volume	101	103	101

23: 2100 North EB Performance by movement Interval #4 5:45

Movement	EBT	SEL	All
Denied Delay (hr)	0.0	0.0	0.0
Denied Del/Veh (s)	0.0	0.0	0.0
Total Delay (hr)	0.4	1.1	1.5
Total Del/Veh (s)	2.4	47.1	7.7
Vehicles Entered	612	78	690
Vehicles Exited	614	79	693
Hourly Exit Rate	2456	316	2772
Input Volume	2471	295	2766
% of Volume	99	107	100

23: 2100 North EB Performance by movement Entire Run

Movement	EBT	SEL	All
Denied Delay (hr)	0.0	0.0	0.0
Denied Del/Veh (s)	0.0	0.0	0.0
Total Delay (hr)	1.7	3.9	5.6
Total Del/Veh (s)	2.4	47.0	7.3
Vehicles Entered	2448	295	2743
Vehicles Exited	2449	293	2742
Hourly Exit Rate	2449	293	2742
Input Volume	2515	300	2815
% of Volume	97	98	97

24: 2100 North EB Performance by movement Interval #1 5:00

Movement	EBL	EBT	All
Denied Delay (hr)	0.0	0.0	0.0
Denied Del/Veh (s)	1.9	0.5	0.5
Total Delay (hr)	0.0	2.3	2.3
Total Del/Veh (s)	5.2	26.3	25.9
Vehicles Entered	6	294	300
Vehicles Exited	6	299	305
Hourly Exit Rate	24	1196	1220
Input Volume	25	1178	1203
% of Volume	96	102	101

24: 2100 North EB Performance by movement Interval #2 5:15

Movement	EBL	EBT	All
Denied Delay (hr)	0.0	0.0	0.0
Denied Del/Veh (s)	1.5	0.5	0.5
Total Delay (hr)	0.0	4.1	4.1
Total Del/Veh (s)	13.6	45.2	44.5
Vehicles Entered	7	312	319
Vehicles Exited	7	286	293
Hourly Exit Rate	28	1144	1172
Input Volume	26	1262	1288
% of Volume	108	91	91

24: 2100 North EB Performance by movement Interval #3 5:30

Movement	EBL	EBT	All
Denied Delay (hr)	0.0	0.0	0.0
Denied Del/Veh (s)	1.8	0.5	0.5
Total Delay (hr)	0.0	5.1	5.2
Total Del/Veh (s)	23.9	55.9	55.4
Vehicles Entered	5	291	296
Vehicles Exited	5	313	318
Hourly Exit Rate	20	1252	1272
Input Volume	25	1178	1203
% of Volume	80	106	106

24: 2100 North EB Performance by movement Interval #4 5:45

Movement	EBL	EBT	All
Denied Delay (hr)	0.0	0.0	0.0
Denied Del/Veh (s)	1.7	0.5	0.5
Total Delay (hr)	0.0	3.5	3.5
Total Del/Veh (s)	9.8	39.3	38.8
Vehicles Entered	6	298	304
Vehicles Exited	6	287	293
Hourly Exit Rate	24	1148	1172
Input Volume	25	1178	1203
% of Volume	96	97	97

24: 2100 North EB Performance by movement Entire Run

Movement	EBL	EBT	All
Denied Delay (hr)	0.0	0.2	0.2
Denied Del/Veh (s)	1.9	0.5	0.5
Total Delay (hr)	0.1	15.0	15.1
Total Del/Veh (s)	13.3	44.4	43.8
Vehicles Entered	22	1194	1216
Vehicles Exited	22	1185	1207
Hourly Exit Rate	22	1185	1207
Input Volume	25	1199	1224
% of Volume	87	99	99

25: 2100 North WB Performance by movement Interval #1 5:00

Movement	WBT	NWL	All
Denied Delay (hr)	0.0	0.0	0.0
Denied Del/Veh (s)	0.0	0.0	0.0
Total Delay (hr)	0.4	0.0	0.4
Total Del/Veh (s)	3.2	9.2	3.3
Vehicles Entered	430	6	436
Vehicles Exited	433	6	439
Hourly Exit Rate	1732	24	1756
Input Volume	1677	25	1702
% of Volume	103	96	103

25: 2100 North WB Performance by movement Interval #2 5:15

Movement	WBT	NWL	All
Denied Delay (hr)	0.0	0.0	0.0
Denied Del/Veh (s)	0.0	0.0	0.0
Total Delay (hr)	0.4	0.0	0.4
Total Del/Veh (s)	3.2	13.6	3.4
Vehicles Entered	412	7	419
Vehicles Exited	409	7	416
Hourly Exit Rate	1636	28	1664
Input Volume	1796	26	1822
% of Volume	91	108	91

25: 2100 North WB Performance by movement Interval #3 5:30

Movement	WBT	NWL	All
Denied Delay (hr)	0.0	0.0	0.0
Denied Del/Veh (s)	0.0	0.0	0.0
Total Delay (hr)	0.4	0.0	0.4
Total Del/Veh (s)	3.3	11.4	3.4
Vehicles Entered	443	5	448
Vehicles Exited	446	4	450
Hourly Exit Rate	1784	16	1800
Input Volume	1677	25	1702
% of Volume	106	64	106

25: 2100 North WB Performance by movement Interval #4 5:45

Movement	WBT	NWL	All
Denied Delay (hr)	0.0	0.0	0.0
Denied Del/Veh (s)	0.0	0.0	0.0
Total Delay (hr)	0.4	0.0	0.4
Total Del/Veh (s)	3.2	9.3	3.3
Vehicles Entered	412	6	418
Vehicles Exited	408	6	414
Hourly Exit Rate	1632	24	1656
Input Volume	1677	25	1702
% of Volume	97	96	97

25: 2100 North WB Performance by movement Entire Run

Movement	WBT	NWL	All
Denied Delay (hr)	0.0	0.0	0.0
Denied Del/Veh (s)	0.0	0.0	0.0
Total Delay (hr)	1.5	0.1	1.6
Total Del/Veh (s)	3.2	12.0	3.4
Vehicles Entered	1696	22	1718
Vehicles Exited	1696	22	1718
Hourly Exit Rate	1696	22	1718
Input Volume	1707	25	1732
% of Volume	99	87	99

31: 400 East & Crossroads Blvd Performance by movement Interval #1 5:00

Movement	EBL	EBT	EBR	WBL	WBT	WBR	NBL	NBT	NBR	SBL	SBT	SBR
Denied Delay (hr)	0.0	0.0	0.0	0.0	0.1	0.0	0.0	0.0	0.0	0.0	0.0	0.0
Denied Del/Veh (s)	0.0	0.0	0.0	0.9	0.9	1.7	0.2	0.1	0.1	0.3	0.2	3.9
Total Delay (hr)	0.0	0.2	0.0	0.0	0.4	0.0	0.0	0.0	0.0	0.3	0.1	0.1
Total Del/Veh (s)	8.5	4.8	1.7	11.0	6.1	2.8	43.8	74.1	16.8	88.0	79.0	14.2
Vehicles Entered	13	158	3	14	208	15	2	1	9	13	6	16
Vehicles Exited	13	158	3	14	207	15	2	1	9	10	5	16
Hourly Exit Rate	52	632	12	56	828	60	8	4	36	40	20	64
Input Volume	55	688	15	59	850	67	10	5	34	48	20	61
% of Volume	95	92	80	95	97	90	80	80	106	83	100	105

31: 400 East & Crossroads Blvd Performance by movement Interval #1 5:00

Movement	All
Denied Delay (hr)	0.1
Denied Del/Veh (s)	0.6
Total Delay (hr)	1.3
Total Del/Veh (s)	9.7
Vehicles Entered	458
Vehicles Exited	453
Hourly Exit Rate	1812
Input Volume	1912
% of Volume	95

31: 400 East & Crossroads Blvd Performance by movement Interval #2 5:15

Movement	EBL	EBT	EBR	WBL	WBT	WBR	NBL	NBT	NBR	SBL	SBT	SBR
Denied Delay (hr)	0.0	0.0	0.0	0.0	0.1	0.0	0.0	0.0	0.0	0.0	0.0	0.0
Denied Del/Veh (s)	0.0	0.0	0.0	1.0	1.1	1.9	0.1	0.1	0.1	0.4	0.2	4.0
Total Delay (hr)	0.0	0.3	0.0	0.0	0.4	0.0	0.1	0.0	0.1	1.0	0.4	0.2
Total Del/Veh (s)	11.9	5.4	1.1	10.6	5.8	3.1	109.9	42.3	27.7	217.4	213.6	34.2
Vehicles Entered	12	171	3	13	238	20	2	1	10	13	5	16
Vehicles Exited	12	172	3	13	236	20	2	1	10	13	5	16
Hourly Exit Rate	48	688	12	52	944	80	8	4	40	52	20	64
Input Volume	59	737	16	63	911	72	11	5	37	52	21	65
% of Volume	81	93	75	83	104	111	73	80	108	100	95	98

31: 400 East & Crossroads Blvd Performance by movement Interval #2 5:15

Movement	All
Denied Delay (hr)	0.1
Denied Del/Veh (s)	0.8
Total Delay (hr)	2.4
Total Del/Veh (s)	16.5
Vehicles Entered	504
Vehicles Exited	503
Hourly Exit Rate	2012
Input Volume	2049
% of Volume	98

31: 400 East & Crossroads Blvd Performance by movement Interval #3 5:30

Movement	EBL	EBT	EBR	WBL	WBT	WBR	NBL	NBT	NBR	SBL	SBT	SBR
Denied Delay (hr)	0.0	0.0	0.0	0.0	0.1	0.0	0.0	0.0	0.0	0.0	0.0	0.0
Denied Del/Veh (s)	0.0	0.0	0.0	0.9	1.0	2.0	0.2	0.1	0.1	0.4	0.4	3.9
Total Delay (hr)	0.1	0.5	0.0	0.1	0.7	0.0	0.1	0.0	0.1	1.1	0.4	0.4
Total Del/Veh (s)	20.4	10.6	2.4	18.6	11.5	5.2	75.2	118.8	31.4	236.2	262.2	78.0
Vehicles Entered	14	174	4	14	218	17	3	1	8	14	4	16
Vehicles Exited	14	174	3	13	217	17	3	1	8	12	4	14
Hourly Exit Rate	56	696	12	52	868	68	12	4	32	48	16	56
Input Volume	55	688	15	59	850	67	10	5	34	48	20	61
% of Volume	102	101	80	88	102	101	120	80	94	100	80	92

31: 400 East & Crossroads Blvd Performance by movement Interval #3 5:30

Movement	All
Denied Delay (hr)	0.1
Denied Del/Veh (s)	0.7
Total Delay (hr)	3.6
Total Del/Veh (s)	25.1
Vehicles Entered	487
Vehicles Exited	480
Hourly Exit Rate	1920
Input Volume	1912
% of Volume	100

31: 400 East & Crossroads Blvd Performance by movement Interval #4 5:45

Movement	EBL	EBT	EBR	WBL	WBT	WBR	NBL	NBT	NBR	SBL	SBT	SBR
Denied Delay (hr)	0.0	0.0	0.0	0.0	0.1	0.0	0.0	0.0	0.0	0.0	0.0	0.1
Denied Del/Veh (s)	0.0	0.0	0.0	1.1	1.0	2.0	0.1	0.1	0.1	5.6	13.3	19.4
Total Delay (hr)	0.1	0.5	0.0	0.1	0.8	0.0	0.2	0.1	0.2	1.4	0.6	0.7
Total Del/Veh (s)	22.8	11.2	3.4	17.7	12.0	6.1	242.3	231.6	83.0	324.6	361.9	162.8
Vehicles Entered	12	168	3	16	222	18	3	1	9	10	4	14
Vehicles Exited	12	164	4	16	222	18	2	1	8	10	4	12
Hourly Exit Rate	48	656	16	64	888	72	8	4	32	40	16	48
Input Volume	55	688	15	59	850	67	10	5	34	48	20	61
% of Volume	87	95	107	108	104	107	80	80	94	83	80	79

31: 400 East & Crossroads Blvd Performance by movement Interval #4 5:45

Movement	All
Denied Delay (hr)	0.2
Denied Del/Veh (s)	1.4
Total Delay (hr)	4.7
Total Del/Veh (s)	33.0
Vehicles Entered	480
Vehicles Exited	473
Hourly Exit Rate	1892
Input Volume	1912
% of Volume	99

31: 400 East & Crossroads Blvd Performance by movement Entire Run

Movement	EBL	EBT	EBR	WBL	WBT	WBR	NBL	NBT	NBR	SBL	SBT	SBR
Denied Delay (hr)	0.0	0.0	0.0	0.0	0.2	0.0	0.0	0.0	0.0	0.0	0.0	0.1
Denied Del/Veh (s)	0.0	0.0	0.0	1.0	1.0	1.9	0.1	0.1	0.1	1.4	2.9	7.4
Total Delay (hr)	0.2	1.5	0.0	0.2	2.3	0.1	0.4	0.1	0.4	3.8	1.5	1.3
Total Del/Veh (s)	16.1	8.1	2.4	14.7	9.2	4.5	133.5	116.7	42.4	270.1	275.0	76.4
Vehicles Entered	50	671	13	57	886	70	10	4	37	49	20	62
Vehicles Exited	50	669	13	56	882	70	10	4	35	44	17	58
Hourly Exit Rate	50	669	13	56	882	70	10	4	35	44	17	58
Input Volume	56	700	15	60	865	68	10	5	35	49	20	62
% of Volume	89	96	85	93	102	103	98	80	101	90	84	94

31: 400 East & Crossroads Blvd Performance by movement Entire Run

Movement	All
Denied Delay (hr)	0.5
Denied Del/Veh (s)	0.9
Total Delay (hr)	11.9
Total Del/Veh (s)	22.0
Vehicles Entered	1929
Vehicles Exited	1908
Hourly Exit Rate	1908
Input Volume	1946
% of Volume	98

34: Crossroads Blvd Performance by movement Interval #1 5:00

Movement	EBT	EBR	WBT	All
Denied Delay (hr)	0.0	0.0	0.0	0.0
Denied Del/Veh (s)	0.0	0.0	0.0	0.0
Total Delay (hr)	0.3	0.0	0.0	0.3
Total Del/Veh (s)	5.1	1.6	0.3	2.5
Vehicles Entered	182	4	221	407
Vehicles Exited	173	4	221	398
Hourly Exit Rate	692	16	884	1592
Input Volume	758	20	921	1699
% of Volume	91	80	96	94

34: Crossroads Blvd Performance by movement Interval #2 5:15

Movement	EBT	EBR	WBT	All
Denied Delay (hr)	0.0	0.0	0.0	0.0
Denied Del/Veh (s)	0.0	0.0	0.0	0.0
Total Delay (hr)	0.3	0.0	0.0	0.3
Total Del/Veh (s)	5.6	1.3	0.3	2.6
Vehicles Entered	183	6	253	442
Vehicles Exited	187	6	254	447
Hourly Exit Rate	748	24	1016	1788
Input Volume	813	21	988	1822
% of Volume	92	114	103	98

34: Crossroads Blvd Performance by movement Interval #3 5:30

Movement	EBT	EBR	WBT	All
Denied Delay (hr)	0.0	0.0	0.0	0.0
Denied Del/Veh (s)	0.0	0.0	0.0	0.0
Total Delay (hr)	0.3	0.0	0.0	0.3
Total Del/Veh (s)	5.5	1.4	0.3	2.6
Vehicles Entered	185	5	237	427
Vehicles Exited	186	5	236	427
Hourly Exit Rate	744	20	944	1708
Input Volume	758	20	921	1699
% of Volume	98	100	102	101

34: Crossroads Blvd Performance by movement Interval #4 5:45

Movement	EBT	EBR	WBT	All
Denied Delay (hr)	0.0	0.0	0.0	0.0
Denied Del/Veh (s)	0.0	0.0	0.0	0.0
Total Delay (hr)	0.3	0.0	0.0	0.3
Total Del/Veh (s)	5.3	1.1	0.3	2.5
Vehicles Entered	179	4	239	422
Vehicles Exited	185	5	239	429
Hourly Exit Rate	740	20	956	1716
Input Volume	758	20	921	1699
% of Volume	98	100	104	101

34: Crossroads Blvd Performance by movement Entire Run

Movement	EBT	EBR	WBT	All
Denied Delay (hr)	0.0	0.0	0.0	0.0
Denied Del/Veh (s)	0.0	0.0	0.0	0.0
Total Delay (hr)	1.1	0.0	0.1	1.2
Total Del/Veh (s)	5.6	1.4	0.3	2.6
Vehicles Entered	729	19	950	1698
Vehicles Exited	731	19	950	1700
Hourly Exit Rate	731	19	950	1700
Input Volume	772	20	938	1730
% of Volume	95	94	101	98

38: Performance by movement Interval #1 5:00

Movement	EBL	EBR	NBL	NBT	SBT	SBR	All
Denied Delay (hr)	0.0	0.0	0.0	0.0	2.0	0.2	2.2
Denied Del/Veh (s)	0.2	0.2	0.0	0.0	10.7	12.1	6.3
Total Delay (hr)	1.3	1.1	1.3	1.2	18.3	1.5	24.8
Total Del/Veh (s)	99.4	49.2	51.6	11.7	95.3	80.7	66.2
Vehicles Entered	38	70	84	356	650	63	1261
Vehicles Exited	36	72	82	350	575	55	1170
Hourly Exit Rate	144	288	328	1400	2300	220	4680
Input Volume	157	290	344	1464	2756	246	5257
% of Volume	92	99	95	96	83	89	89

38: Performance by movement Interval #2 5:15

Movement	EBL	EBR	NBL	NBT	SBT	SBR	All
Denied Delay (hr)	0.0	0.0	0.0	0.0	27.8	2.6	30.4
Denied Del/Veh (s)	0.2	0.3	0.0	0.0	130.1	131.0	77.3
Total Delay (hr)	1.8	2.0	2.0	1.5	26.2	2.2	35.7
Total Del/Veh (s)	141.5	80.2	70.8	13.9	135.3	120.6	92.6
Vehicles Entered	37	79	90	370	579	55	1210
Vehicles Exited	37	76	89	370	569	56	1197
Hourly Exit Rate	148	304	356	1480	2276	224	4788
Input Volume	168	311	368	1569	2953	263	5632
% of Volume	88	98	97	94	77	85	85

38: Performance by movement Interval #3 5:30

Movement	EBL	EBR	NBL	NBT	SBT	SBR	All
Denied Delay (hr)	0.0	0.0	0.0	0.0	61.8	5.5	67.3
Denied Del/Veh (s)	0.2	0.2	0.0	0.0	254.0	245.9	159.0
Total Delay (hr)	2.4	1.8	2.7	1.8	26.8	2.1	37.5
Total Del/Veh (s)	190.4	83.2	92.9	16.2	136.8	122.1	97.5
Vehicles Entered	36	66	93	373	578	50	1196
Vehicles Exited	37	72	97	384	570	50	1210
Hourly Exit Rate	148	288	388	1536	2280	200	4840
Input Volume	157	290	344	1464	2756	246	5257
% of Volume	94	99	113	105	83	81	92

38: Performance by movement Interval #4 5:45

Movement	EBL	EBR	NBL	NBT	SBT	SBR	All
Denied Delay (hr)	0.0	0.0	0.0	0.0	88.2	8.6	96.9
Denied Del/Veh (s)	0.2	0.3	0.0	0.0	323.5	334.2	211.9
Total Delay (hr)	2.6	2.0	2.3	1.5	26.5	2.3	37.3
Total Del/Veh (s)	192.3	85.8	86.6	14.3	136.2	124.1	97.9
Vehicles Entered	40	77	87	367	567	57	1195
Vehicles Exited	37	76	91	364	566	55	1189
Hourly Exit Rate	148	304	364	1456	2264	220	4756
Input Volume	157	290	344	1464	2756	246	5257
% of Volume	94	105	106	99	82	89	90

38: Performance by movement Entire Run

Movement	EBL	EBR	NBL	NBT	SBT	SBR	All
Denied Delay (hr)	0.0	0.0	0.0	0.0	179.8	17.0	196.9
Denied Del/Veh (s)	0.2	0.3	0.0	0.0	232.2	234.6	133.4
Total Delay (hr)	8.1	6.8	8.4	5.9	97.8	8.2	135.3
Total Del/Veh (s)	182.9	81.1	83.1	14.5	145.8	128.1	98.4
Vehicles Entered	151	293	354	1466	2373	225	4862
Vehicles Exited	148	297	359	1467	2281	217	4769
Hourly Exit Rate	148	297	359	1467	2281	217	4769
Input Volume	160	295	350	1490	2805	250	5351
% of Volume	93	101	103	98	81	87	89

Total Network Performance By Interval

Interval Start	5:00	5:15	5:30	5:45	All
Denied Delay (hr)	5.3	39.0	80.4	108.1	232.8
Denied Del/Veh (s)	5.5	36.5	75.9	99.0	58.0
Total Delay (hr)	90.1	120.0	131.6	130.6	472.2
Total Del/Veh (s)	79.5	99.4	109.4	109.0	116.8
Vehicles Entered	3469	3591	3434	3442	13947
Vehicles Exited	3316	3461	3460	3444	13684
Hourly Exit Rate	13264	13844	13840	13776	13684
Input Volume	62696	67171	62696	62696	63815
% of Volume	21	21	22	22	21

Intersection: 2: Redwood Road & Crossroads Blvd, Interval #1

Movement	EB	EB	EB	EB	EB	EB	WB	WB	WB	WB	WB	WB
Directions Served	L	L	T	T	T	R	L	L	T	T	T	R
Maximum Queue (ft)	227	240	164	146	40	32	128	154	161	169	163	133
Average Queue (ft)	157	179	106	59	11	13	87	112	107	117	100	72
95th Queue (ft)	248	261	166	139	54	34	143	164	161	178	173	138
Link Distance (ft)			1586	1586					901	901		
Upstream Blk Time (%)												
Queuing Penalty (veh)												
Storage Bay Dist (ft)	700	700			500	500	220	220			340	340
Storage Blk Time (%)									0			
Queuing Penalty (veh)									1			

Intersection: 2: Redwood Road & Crossroads Blvd, Interval #1

Movement	NB	NB	NB	NB	NB	SB	SB	SB	SB	SB
Directions Served	L	L	T	T	R	L	L	T	T	R
Maximum Queue (ft)	185	237	328	322	46	211	236	461	460	201
Average Queue (ft)	129	174	244	228	25	127	123	326	336	96
95th Queue (ft)	224	255	345	330	47	207	275	538	537	213
Link Distance (ft)			1242	1242				1013	1013	1013
Upstream Blk Time (%)										
Queuing Penalty (veh)										
Storage Bay Dist (ft)	200	200			300	450	450			
Storage Blk Time (%)	0	4	16	1				3		
Queuing Penalty (veh)	2	20	48	2				10		

Intersection: 2: Redwood Road & Crossroads Blvd, Interval #2

Movement	EB	EB	EB	EB	EB	EB	WB	WB	WB	WB	WB	WB
Directions Served	L	L	T	T	T	R	L	L	T	T	T	R
Maximum Queue (ft)	258	290	174	139	42	37	150	162	169	179	168	132
Average Queue (ft)	180	203	119	76	13	15	101	118	116	124	109	76
95th Queue (ft)	266	290	183	157	48	39	157	172	173	183	168	132
Link Distance (ft)			1586	1586					901	901		
Upstream Blk Time (%)												
Queuing Penalty (veh)												
Storage Bay Dist (ft)	700	700			500	500	220	220			340	340
Storage Blk Time (%)							0	0	0			
Queuing Penalty (veh)							0	0	0			

Intersection: 2: Redwood Road & Crossroads Blvd, Interval #2

Movement	NB	NB	NB	NB	NB	SB	SB	SB	SB	SB
Directions Served	L	L	T	T	R	L	L	T	T	R
Maximum Queue (ft)	196	338	465	455	133	216	408	632	637	307
Average Queue (ft)	128	207	320	301	51	147	217	458	466	118
95th Queue (ft)	219	361	523	488	215	219	526	794	781	340
Link Distance (ft)			1242	1242				1013	1013	1013
Upstream Blk Time (%)								0	0	
Queuing Penalty (veh)								1	1	
Storage Bay Dist (ft)	200	200			300	450	450			
Storage Blk Time (%)	0	4	30	11				12		
Queuing Penalty (veh)	2	19	94	19				43		

Intersection: 2: Redwood Road & Crossroads Blvd, Interval #3

Movement	EB	EB	EB	EB	EB	EB	WB	WB	WB	WB	WB	WB
Directions Served	L	L	T	T	T	R	L	L	T	T	T	R
Maximum Queue (ft)	256	283	155	131	34	41	147	163	156	174	164	142
Average Queue (ft)	180	207	107	63	9	14	91	107	113	126	112	85
95th Queue (ft)	277	310	163	137	33	39	159	173	162	181	172	155
Link Distance (ft)			1586	1586					901	901		
Upstream Blk Time (%)												
Queuing Penalty (veh)												
Storage Bay Dist (ft)	700	700			500	500	220	220			340	340
Storage Blk Time (%)												
Queuing Penalty (veh)												

Intersection: 2: Redwood Road & Crossroads Blvd, Interval #3

Movement	NB	NB	NB	NB	NB	SB	SB	SB	SB	SB
Directions Served	L	L	T	T	R	L	L	T	T	R
Maximum Queue (ft)	221	296	365	338	88	215	439	770	791	532
Average Queue (ft)	140	188	274	253	34	156	327	657	665	227
95th Queue (ft)	251	300	397	369	120	238	699	1137	1123	696
Link Distance (ft)			1242	1242				1013	1013	1013
Upstream Blk Time (%)								1	1	0
Queuing Penalty (veh)								11	10	0
Storage Bay Dist (ft)	200	200			300	450	450			
Storage Blk Time (%)	1	7	23	4				30		
Queuing Penalty (veh)	4	31	68	6				99		

Intersection: 2: Redwood Road & Crossroads Blvd, Interval #4

Movement	EB	EB	EB	EB	EB	EB	WB	WB	WB	WB	WB	WB
Directions Served	L	L	T	T	T	R	L	L	T	T	T	R
Maximum Queue (ft)	244	254	162	139	27	39	121	150	174	181	163	156
Average Queue (ft)	169	189	118	71	9	17	85	105	116	121	108	76
95th Queue (ft)	249	267	178	146	28	43	133	159	176	187	172	147
Link Distance (ft)			1586	1586					901	901		
Upstream Blk Time (%)												
Queuing Penalty (veh)												
Storage Bay Dist (ft)	700	700			500	500	220	220			340	340
Storage Blk Time (%)									0			
Queuing Penalty (veh)									0			

Intersection: 2: Redwood Road & Crossroads Blvd, Interval #4

Movement	NB	NB	NB	NB	NB	SB	SB	SB	SB	SB
Directions Served	L	L	T	T	R	L	L	T	T	R
Maximum Queue (ft)	195	270	350	327	45	233	468	875	872	649
Average Queue (ft)	145	184	259	243	25	147	402	762	751	271
95th Queue (ft)	220	263	362	340	45	249	796	1238	1203	760
Link Distance (ft)			1242	1242				1013	1013	1013
Upstream Blk Time (%)								2	1	0
Queuing Penalty (veh)								18	10	1
Storage Bay Dist (ft)	200	200			300	450	450			
Storage Blk Time (%)	0	6	21	2				39		
Queuing Penalty (veh)	2	26	64	4				129		

Intersection: 2: Redwood Road & Crossroads Blvd, All Intervals

Movement	EB	EB	EB	EB	EB	EB	WB	WB	WB	WB	WB	WB
Directions Served	L	L	T	T	T	R	L	L	T	T	T	R
Maximum Queue (ft)	284	310	194	163	60	57	170	183	199	214	194	176
Average Queue (ft)	172	194	112	67	11	15	91	110	113	122	107	77
95th Queue (ft)	262	284	173	145	42	39	149	168	168	183	172	144
Link Distance (ft)			1586	1586					901	901		
Upstream Blk Time (%)												
Queuing Penalty (veh)												
Storage Bay Dist (ft)	700	700			500	500	220	220			340	340
Storage Blk Time (%)							0	0	0			
Queuing Penalty (veh)							0	0	0			

Intersection: 2: Redwood Road & Crossroads Blvd, All Intervals

Movement	NB	NB	NB	NB	NB	SB	SB	SB	SB	SB
Directions Served	L	L	T	T	R	L	L	T	T	R
Maximum Queue (ft)	251	386	490	467	142	289	545	882	892	728
Average Queue (ft)	136	188	274	256	34	144	267	551	555	178
95th Queue (ft)	230	301	421	394	129	231	633	1032	1014	559
Link Distance (ft)			1242	1242				1013	1013	1013
Upstream Blk Time (%)								1	1	0
Queuing Penalty (veh)								7	5	0
Storage Bay Dist (ft)	200	200			300	450	450			
Storage Blk Time (%)	0	5	22	4				21		
Queuing Penalty (veh)	2	24	69	8				70		

Intersection: 3: Redwood Road & Commerce Drive, Interval #1

Movement	EB	EB	EB	WB	WB	WB	NB	NB	NB	NB	SB	SB
Directions Served	L	T	R	L	T	R	L	T	T	R	L	T
Maximum Queue (ft)	196	211	143	61	69	62	326	460	452	91	214	473
Average Queue (ft)	138	73	67	25	32	30	105	343	357	14	99	336
95th Queue (ft)	219	196	144	63	76	64	268	484	484	121	228	519
Link Distance (ft)		1102			583			1013	1013			503
Upstream Blk Time (%)												0
Queuing Penalty (veh)												7
Storage Bay Dist (ft)	110		150	105		105	250			250	300	
Storage Blk Time (%)	25	1	0		0			16	18			10
Queuing Penalty (veh)	40	4	1		0			16	5			12

Intersection: 3: Redwood Road & Commerce Drive, Interval #1

Movement	SB	SB
Directions Served	T	R
Maximum Queue (ft)	487	250
Average Queue (ft)	366	168
95th Queue (ft)	551	344
Link Distance (ft)	503	
Upstream Blk Time (%)	1	
Queuing Penalty (veh)	10	
Storage Bay Dist (ft)		150
Storage Blk Time (%)	22	0
Queuing Penalty (veh)	85	2

Intersection: 3: Redwood Road & Commerce Drive, Interval #2

Movement	EB	EB	EB	WB	WB	WB	NB	NB	NB	NB	SB	SB
Directions Served	L	T	R	L	T	R	L	T	T	R	L	T
Maximum Queue (ft)	194	235	142	47	57	84	337	494	510	203	350	497
Average Queue (ft)	154	114	82	20	21	39	144	371	385	27	142	401
95th Queue (ft)	225	317	175	53	57	80	355	534	538	173	356	553
Link Distance (ft)		1102			583			1013	1013			503
Upstream Blk Time (%)												2
Queuing Penalty (veh)												33
Storage Bay Dist (ft)	110		150	105		105	250			250	300	
Storage Blk Time (%)	36	1	0	0	0	1		17	20			17
Queuing Penalty (veh)	63	4	1	0	0	1		18	6			23

Intersection: 3: Redwood Road & Commerce Drive, Interval #2

Movement	SB	SB
Directions Served	T	R
Maximum Queue (ft)	517	250
Average Queue (ft)	423	143
95th Queue (ft)	578	325
Link Distance (ft)	503	
Upstream Blk Time (%)	4	
Queuing Penalty (veh)	56	
Storage Bay Dist (ft)		150
Storage Blk Time (%)	26	
Queuing Penalty (veh)	109	

Intersection: 3: Redwood Road & Commerce Drive, Interval #3

Movement	EB	EB	EB	WB	WB	WB	NB	NB	NB	NB	SB	SB
Directions Served	L	T	R	L	T	R	L	T	T	R	L	T
Maximum Queue (ft)	184	200	120	50	78	77	290	476	474	204	395	520
Average Queue (ft)	125	69	58	21	31	41	133	359	367	37	180	453
95th Queue (ft)	197	189	124	52	81	84	320	505	495	216	467	613
Link Distance (ft)		1102			583			1013	1013			503
Upstream Blk Time (%)												7
Queuing Penalty (veh)												101
Storage Bay Dist (ft)	110		150	105		105	250			250	300	
Storage Blk Time (%)	28	1	0		1	1		16	18			25
Queuing Penalty (veh)	46	4	0		1	0		16	5			32

Intersection: 3: Redwood Road & Commerce Drive, Interval #3

Movement	SB	SB
Directions Served	T	R
Maximum Queue (ft)	533	250
Average Queue (ft)	476	189
95th Queue (ft)	615	345
Link Distance (ft)	503	
Upstream Blk Time (%)	10	
Queuing Penalty (veh)	148	
Storage Bay Dist (ft)		150
Storage Blk Time (%)	32	
Queuing Penalty (veh)	123	

Intersection: 3: Redwood Road & Commerce Drive, Interval #4

Movement	EB	EB	EB	WB	WB	WB	NB	NB	NB	NB	SB	SB
Directions Served	L	T	R	L	T	R	L	T	T	R	L	T
Maximum Queue (ft)	194	184	128	56	68	74	243	444	443	131	364	508
Average Queue (ft)	137	99	61	23	27	36	114	328	340	22	166	452
95th Queue (ft)	215	280	150	61	67	82	265	460	465	149	422	602
Link Distance (ft)		1102			583			1013	1013			503
Upstream Blk Time (%)												8
Queuing Penalty (veh)												110
Storage Bay Dist (ft)	110		150	105		105	250			250	300	
Storage Blk Time (%)	33	0	0		0	1		13	16			23
Queuing Penalty (veh)	53	0	0		0	1		13	4			30

Intersection: 3: Redwood Road & Commerce Drive, Interval #4

Movement	SB	SB
Directions Served	T	R
Maximum Queue (ft)	515	250
Average Queue (ft)	469	190
95th Queue (ft)	612	349
Link Distance (ft)	503	
Upstream Blk Time (%)	10	
Queuing Penalty (veh)	141	
Storage Bay Dist (ft)		150
Storage Blk Time (%)	31	0
Queuing Penalty (veh)	119	3

Intersection: 3: Redwood Road & Commerce Drive, All Intervals

Movement	EB	EB	EB	WB	WB	WB	NB	NB	NB	NB	SB	SB
Directions Served	L	T	R	L	T	R	L	T	T	R	L	T
Maximum Queue (ft)	208	304	188	76	94	104	379	529	534	354	463	531
Average Queue (ft)	139	89	67	22	27	37	124	350	362	25	147	411
95th Queue (ft)	216	252	150	58	71	78	305	498	499	168	382	590
Link Distance (ft)		1102			583			1013	1013			503
Upstream Blk Time (%)												4
Queuing Penalty (veh)												63
Storage Bay Dist (ft)	110		150	105		105	250			250	300	
Storage Blk Time (%)	31	1	0	0	0	1		16	18			19
Queuing Penalty (veh)	51	3	1	0	0	0		16	5			24

Intersection: 3: Redwood Road & Commerce Drive, All Intervals

Movement	SB	SB
Directions Served	T	R
Maximum Queue (ft)	540	250
Average Queue (ft)	433	172
95th Queue (ft)	606	344
Link Distance (ft)	503	
Upstream Blk Time (%)	6	
Queuing Penalty (veh)	89	
Storage Bay Dist (ft)		150
Storage Blk Time (%)	28	0
Queuing Penalty (veh)	109	1

Intersection: 11: Redwood Road & Aspen Hills Blvd, Interval #1

Movement	EB	EB	WB	WB	WB	WB	NB	NB	NB	NB	SB	SB
Directions Served	L	R	L	L	T	R	L	T	T	R	L	T
Maximum Queue (ft)	34	46	155	192	60	202	98	299	294	101	293	573
Average Queue (ft)	9	16	105	139	9	126	47	196	200	35	142	378
95th Queue (ft)	33	43	180	209	76	208	113	309	311	130	283	643
Link Distance (ft)					790			1023	1023			1499
Upstream Blk Time (%)												
Queuing Penalty (veh)												
Storage Bay Dist (ft)	150	150	200	200		150	100			150	200	
Storage Blk Time (%)			0	1	0	6	6	26	17		3	15
Queuing Penalty (veh)			0	3	2	14	47	8	27		42	40

Intersection: 11: Redwood Road & Aspen Hills Blvd, Interval #1

Movement	SB	SB
Directions Served	T	R
Maximum Queue (ft)	493	232
Average Queue (ft)	394	51
95th Queue (ft)	558	270
Link Distance (ft)	1499	
Upstream Blk Time (%)		
Queuing Penalty (veh)		
Storage Bay Dist (ft)		200
Storage Blk Time (%)	19	
Queuing Penalty (veh)	14	

Intersection: 11: Redwood Road & Aspen Hills Blvd, Interval #2

Movement	EB	EB	WB	WB	WB	WB	NB	NB	NB	NB	SB	SB
Directions Served	L	R	L	L	T	R	L	T	T	R	L	T
Maximum Queue (ft)	28	51	203	228	71	200	136	439	448	248	451	573
Average Queue (ft)	11	20	125	158	10	130	62	271	268	68	201	416
95th Queue (ft)	34	54	227	251	78	211	146	427	427	235	440	619
Link Distance (ft)					790			1023	1023			1499
Upstream Blk Time (%)												
Queuing Penalty (veh)												
Storage Bay Dist (ft)	150	150	200	200		150	100			150	200	
Storage Blk Time (%)			3	7	0	7	7	35	29		4	19
Queuing Penalty (veh)			9	20	1	18	58	11	49		60	54

Intersection: 11: Redwood Road & Aspen Hills Blvd, Interval #2

Movement	SB	SB
Directions Served	T	R
Maximum Queue (ft)	572	364
Average Queue (ft)	437	83
95th Queue (ft)	625	357
Link Distance (ft)	1499	
Upstream Blk Time (%)		
Queuing Penalty (veh)		
Storage Bay Dist (ft)		200
Storage Blk Time (%)	23	
Queuing Penalty (veh)	18	

Intersection: 11: Redwood Road & Aspen Hills Blvd, Interval #3

Movement	EB	EB	WB	WB	WB	WB	NB	NB	NB	NB	SB	SB
Directions Served	L	R	L	L	T	R	L	T	T	R	L	T
Maximum Queue (ft)	31	40	177	226	91	209	176	461	459	275	417	654
Average Queue (ft)	9	16	109	151	13	122	61	303	303	101	235	506
95th Queue (ft)	31	43	206	228	116	210	170	520	527	309	494	846
Link Distance (ft)					790			1023	1023			1499
Upstream Blk Time (%)												
Queuing Penalty (veh)												
Storage Bay Dist (ft)	150	150	200	200		150	100			150	200	
Storage Blk Time (%)			0	4	0	6	11	35	28		5	22
Queuing Penalty (veh)			0	11	1	16	82	10	45		70	57

Intersection: 11: Redwood Road & Aspen Hills Blvd, Interval #3

Movement	SB	SB
Directions Served	T	R
Maximum Queue (ft)	664	233
Average Queue (ft)	525	53
95th Queue (ft)	831	270
Link Distance (ft)	1499	
Upstream Blk Time (%)		
Queuing Penalty (veh)		
Storage Bay Dist (ft)		200
Storage Blk Time (%)	24	
Queuing Penalty (veh)	18	

Intersection: 11: Redwood Road & Aspen Hills Blvd, Interval #4

Movement	EB	EB	WB	WB	WB	NB	NB	NB	NB	SB	SB	SB
Directions Served	L	R	L	L	R	L	T	T	R	L	T	T
Maximum Queue (ft)	32	43	174	198	209	146	369	362	154	380	768	761
Average Queue (ft)	10	18	98	140	127	58	241	243	57	240	570	582
95th Queue (ft)	35	45	195	220	221	148	404	405	203	518	1034	1022
Link Distance (ft)							1023	1023			1499	1499
Upstream Blk Time (%)											0	
Queuing Penalty (veh)											1	
Storage Bay Dist (ft)	150	150	200	200	150	100			150	200		
Storage Blk Time (%)			1	4	7	4	27	22		3	22	26
Queuing Penalty (veh)			2	12	19	29	8	35		45	59	19

Intersection: 11: Redwood Road & Aspen Hills Blvd, Interval #4

Movement	SB
Directions Served	R
Maximum Queue (ft)	363
Average Queue (ft)	89
95th Queue (ft)	373
Link Distance (ft)	
Upstream Blk Time (%)	
Queuing Penalty (veh)	
Storage Bay Dist (ft)	200
Storage Blk Time (%)	
Queuing Penalty (veh)	

Intersection: 11: Redwood Road & Aspen Hills Blvd, All Intervals

Movement	EB	EB	WB	WB	WB	WB	NB	NB	NB	NB	SB	SB
Directions Served	L	R	L	L	T	R	L	T	T	R	L	T
Maximum Queue (ft)	46	67	227	269	168	249	220	500	504	300	476	817
Average Queue (ft)	10	17	109	147	8	126	57	253	254	65	205	468
95th Queue (ft)	33	46	204	228	78	213	146	431	434	229	448	822
Link Distance (ft)					790			1023	1023			1499
Upstream Blk Time (%)												0
Queuing Penalty (veh)												0
Storage Bay Dist (ft)	150	150	200	200		150	100			150	200	
Storage Blk Time (%)			1	4	0	6	7	31	24		4	20
Queuing Penalty (veh)			3	11	1	17	54	9	39		54	53

Intersection: 11: Redwood Road & Aspen Hills Blvd, All Intervals

Movement	SB	SB
Directions Served	T	R
Maximum Queue (ft)	810	366
Average Queue (ft)	484	69
95th Queue (ft)	804	321
Link Distance (ft)	1499	
Upstream Blk Time (%)		
Queuing Penalty (veh)		
Storage Bay Dist (ft)		200
Storage Blk Time (%)	23	
Queuing Penalty (veh)	17	

Intersection: 13: Redwood Road & Sergeant Court Drive, Interval #1

Movement	EB	EB	WB	WB	NB	NB	NB	SB	SB	SB	SB
Directions Served	LT	R	LT	R	L	T	R	L	T	T	R
Maximum Queue (ft)	32	63	64	159	50	52	9	151	80	55	4
Average Queue (ft)	10	28	21	88	24	8	2	88	15	16	1
95th Queue (ft)	33	77	69	165	61	59	10	158	86	80	6
Link Distance (ft)		820	791			503			1023	1023	
Upstream Blk Time (%)											
Queuing Penalty (veh)											
Storage Bay Dist (ft)	25			150	50		150	150			100
Storage Blk Time (%)	40	45	0	3	19	0		2	0	0	
Queuing Penalty (veh)	10	2	0	0	146	0		23	0	0	

Intersection: 13: Redwood Road & Sergeant Court Drive, Interval #2

Movement	EB	EB	WB	WB	NB	NB	NB	NB	SB	SB	SB
Directions Served	LT	R	LT	R	L	T	T	R	L	T	T
Maximum Queue (ft)	30	100	98	149	54	27	37	15	140	225	194
Average Queue (ft)	15	58	63	82	27	7	5	2	93	51	43
95th Queue (ft)	40	135	130	161	68	56	57	11	154	173	152
Link Distance (ft)		820	791			503	503			1023	1023
Upstream Blk Time (%)											
Queuing Penalty (veh)											
Storage Bay Dist (ft)	25			150	50			150	150		
Storage Blk Time (%)	62	49	2	3	18	0	0		2	2	4
Queuing Penalty (veh)	16	2	3	0	149	0	0		31	4	1

Intersection: 13: Redwood Road & Sergeant Court Drive, Interval #3

Movement	EB	EB	WB	WB	NB	NB	NB	SB	SB	SB	SB
Directions Served	LT	R	LT	R	L	T	R	L	T	T	R
Maximum Queue (ft)	28	117	136	143	62	41	26	211	455	457	25
Average Queue (ft)	15	67	102	79	30	10	4	121	214	241	4
95th Queue (ft)	45	216	183	142	77	58	23	257	644	694	53
Link Distance (ft)		820	791			503			1023	1023	
Upstream Blk Time (%)									0	0	
Queuing Penalty (veh)									1	1	
Storage Bay Dist (ft)	25			150	50		150	150			100
Storage Blk Time (%)	43	43	21	1	21	0		3	9	14	
Queuing Penalty (veh)	11	2	32	0	161	0		41	17	3	

Intersection: 13: Redwood Road & Sergeant Court Drive, Interval #4

Movement	EB	EB	WB	WB	NB	NB	NB	NB	SB	SB	SB	SB
Directions Served	LT	R	LT	R	L	T	T	R	L	T	T	R
Maximum Queue (ft)	35	140	248	166	59	30	2	11	199	514	534	100
Average Queue (ft)	18	80	173	78	34	7	0	2	125	277	297	18
95th Queue (ft)	45	253	358	184	74	46	3	14	268	809	854	124
Link Distance (ft)		820	791			503	503			1023	1023	
Upstream Blk Time (%)										0	0	
Queuing Penalty (veh)										1	1	
Storage Bay Dist (ft)	25			150	50			150	150			100
Storage Blk Time (%)	60	46	54	2	29				4	11	15	
Queuing Penalty (veh)	15	2	85	0	223				57	20	3	

Intersection: 13: Redwood Road & Sergeant Court Drive, All Intervals

Movement	EB	EB	WB	WB	NB	NB	NB	NB	SB	SB	SB	SB
Directions Served	LT	R	LT	R	L	T	T	R	L	T	T	R
Maximum Queue (ft)	50	171	253	211	81	82	37	32	243	566	580	129
Average Queue (ft)	15	58	90	82	28	8	1	2	107	139	149	5
95th Queue (ft)	41	185	233	165	71	55	27	15	219	532	565	65
Link Distance (ft)		820	791			503	503			1023	1023	
Upstream Blk Time (%)										0	0	
Queuing Penalty (veh)										0	0	
Storage Bay Dist (ft)	25			150	50			150	150			100
Storage Blk Time (%)	51	46	19	2	22	0	0		3	5	8	
Queuing Penalty (veh)	13	2	30	0	170	0	0		38	10	2	

Intersection: 19: 3600 West & 2100 North WB, Interval #1

Movement	WB	WB	WB	WB	NB	NB	NB	SB	SB	SB
Directions Served	L	T	T	R	L	T	T	T	T	R
Maximum Queue (ft)	137	144	148	154	96	63	59	534	492	255
Average Queue (ft)	100	142	143	133	41	34	23	388	352	106
95th Queue (ft)	158	144	152	174	92	64	59	589	545	320
Link Distance (ft)	78	78	78	78	258	258	258	762	762	
Upstream Blk Time (%)	22	44	42	24				0	0	
Queuing Penalty (veh)	143	296	281	157				0	0	
Storage Bay Dist (ft)										200
Storage Blk Time (%)									29	
Queuing Penalty (veh)									42	

Intersection: 19: 3600 West & 2100 North WB, Interval #2

Movement	WB	WB	WB	WB	NB	NB	NB	SB	SB	SB
Directions Served	L	T	T	R	L	T	T	T	T	R
Maximum Queue (ft)	140	162	150	159	108	65	59	644	615	350
Average Queue (ft)	110	145	144	134	60	44	35	483	442	126
95th Queue (ft)	153	159	154	174	116	70	69	746	715	366
Link Distance (ft)	78	78	78	78	258	258	258	762	762	
Upstream Blk Time (%)	32	53	52	29				5	5	
Queuing Penalty (veh)	227	376	369	206				0	0	
Storage Bay Dist (ft)										200
Storage Blk Time (%)									33	
Queuing Penalty (veh)									51	

Intersection: 19: 3600 West & 2100 North WB, Interval #3

Movement	WB	WB	WB	WB	NB	NB	NB	SB	SB	SB
Directions Served	L	T	T	R	L	T	T	T	T	R
Maximum Queue (ft)	139	156	151	156	90	69	66	684	665	380
Average Queue (ft)	113	145	144	134	44	38	31	499	469	183
95th Queue (ft)	159	158	153	171	93	74	70	802	777	462
Link Distance (ft)	78	78	78	78	258	258	258	762	762	
Upstream Blk Time (%)	30	47	46	24				4	3	
Queuing Penalty (veh)	197	314	309	158				0	0	
Storage Bay Dist (ft)										200
Storage Blk Time (%)									42	0
Queuing Penalty (veh)									62	1

Intersection: 19: 3600 West & 2100 North WB, Interval #4

Movement	WB	WB	WB	WB	NB	NB	NB	SB	SB	SB
Directions Served	L	T	T	R	L	T	T	T	T	R
Maximum Queue (ft)	137	150	157	146	102	70	68	618	599	341
Average Queue (ft)	103	144	145	128	60	46	37	458	423	132
95th Queue (ft)	151	155	158	172	109	81	72	711	676	380
Link Distance (ft)	78	78	78	78	258	258	258	762	762	
Upstream Blk Time (%)	27	52	51	26				2	1	
Queuing Penalty (veh)	180	347	343	175				0	0	
Storage Bay Dist (ft)										200
Storage Blk Time (%)									31	0
Queuing Penalty (veh)									45	1

Intersection: 19: 3600 West & 2100 North WB, All Intervals

Movement	WB	WB	WB	WB	NB	NB	NB	SB	SB	SB
Directions Served	L	T	T	R	L	T	T	T	T	R
Maximum Queue (ft)	144	170	172	168	127	86	81	778	761	400
Average Queue (ft)	107	144	144	132	51	41	32	457	421	137
95th Queue (ft)	156	156	154	173	105	73	69	724	691	388
Link Distance (ft)	78	78	78	78	258	258	258	762	762	
Upstream Blk Time (%)	27	49	48	26				3	2	
Queuing Penalty (veh)	187	333	326	174				0	0	
Storage Bay Dist (ft)										200
Storage Blk Time (%)									34	0
Queuing Penalty (veh)									50	0

Intersection: 20: 3600 West & 2100 North EB, Interval #1

Movement	EB	EB	EB	EB	NB	NB	SB	SB	SB
Directions Served	L	T	T	R	T	R	L	L	T
Maximum Queue (ft)	98	143	136	60	157	166	186	188	252
Average Queue (ft)	55	130	130	34	51	101	132	127	153
95th Queue (ft)	112	142	143	63	151	198	218	213	268
Link Distance (ft)	64	64	64	64	2313		258	258	258
Upstream Blk Time (%)	9	59	55	1			1	1	2
Queuing Penalty (veh)	28	173	162	2			6	6	9
Storage Bay Dist (ft)						150			
Storage Blk Time (%)					2	4			
Queuing Penalty (veh)					3	2			

Intersection: 20: 3600 West & 2100 North EB, Interval #2

Movement	EB	EB	EB	EB	NB	NB	SB	SB	SB
Directions Served	L	T	T	R	T	R	L	L	T
Maximum Queue (ft)	98	134	136	74	179	191	206	208	254
Average Queue (ft)	47	128	129	43	71	127	135	135	196
95th Queue (ft)	100	136	138	79	184	217	241	246	289
Link Distance (ft)	64	64	64	64	2313		258	258	258
Upstream Blk Time (%)	8	67	65	2			3	3	2
Queuing Penalty (veh)	26	213	206	7			18	18	11
Storage Bay Dist (ft)						150			
Storage Blk Time (%)					1	11			
Queuing Penalty (veh)					3	7			

Intersection: 20: 3600 West & 2100 North EB, Interval #3

Movement	EB	EB	EB	EB	NB	NB	SB	SB	SB
Directions Served	L	T	T	R	T	R	L	L	T
Maximum Queue (ft)	94	140	138	73	171	197	213	216	271
Average Queue (ft)	59	129	130	38	71	135	154	156	172
95th Queue (ft)	101	142	142	79	188	226	246	254	279
Link Distance (ft)	64	64	64	64	2313		258	258	258
Upstream Blk Time (%)	11	64	62	2			3	3	2
Queuing Penalty (veh)	32	190	184	6			17	17	11
Storage Bay Dist (ft)						150			
Storage Blk Time (%)					2	11			
Queuing Penalty (veh)					5	6			

Intersection: 20: 3600 West & 2100 North EB, Interval #4

Movement	EB	EB	EB	EB	NB	NB	SB	SB	SB
Directions Served	L	T	T	R	T	R	L	L	T
Maximum Queue (ft)	102	132	131	64	173	195	205	200	257
Average Queue (ft)	52	128	128	36	72	126	127	129	185
95th Queue (ft)	109	133	133	65	181	210	235	239	271
Link Distance (ft)	64	64	64	64	2313		258	258	258
Upstream Blk Time (%)	14	66	65	1			3	3	1
Queuing Penalty (veh)	42	194	191	3			13	13	6
Storage Bay Dist (ft)						150			
Storage Blk Time (%)					1	8			
Queuing Penalty (veh)					3	4			

Intersection: 20: 3600 West & 2100 North EB, All Intervals

Movement	EB	EB	EB	EB	NB	NB	SB	SB	SB
Directions Served	L	T	T	R	T	R	L	L	T
Maximum Queue (ft)	123	151	149	91	241	237	253	257	287
Average Queue (ft)	53	129	129	38	67	122	137	137	177
95th Queue (ft)	106	139	140	72	177	215	237	240	281
Link Distance (ft)	64	64	64	64	2313		258	258	258
Upstream Blk Time (%)	11	64	62	2			3	3	2
Queuing Penalty (veh)	32	192	186	5			13	13	9
Storage Bay Dist (ft)						150			
Storage Blk Time (%)					2	8			
Queuing Penalty (veh)					3	5			

Intersection: 22: 2100 North WB, Interval #1

Movement	WB	WB	WB	WB
Directions Served	LT	T	T	T
Maximum Queue (ft)	165	505	342	218
Average Queue (ft)	70	288	261	87
95th Queue (ft)	194	661	379	240
Link Distance (ft)		2054	2054	
Upstream Blk Time (%)		0		
Queuing Penalty (veh)		0		
Storage Bay Dist (ft)	200			150
Storage Blk Time (%)	1	15	21	2
Queuing Penalty (veh)	4	141	139	10

Intersection: 22: 2100 North WB, Interval #2

Movement	WB	WB	WB	WB
Directions Served	LT	T	T	T
Maximum Queue (ft)	318	773	813	274
Average Queue (ft)	126	359	373	136
95th Queue (ft)	399	895	925	410
Link Distance (ft)		2054	2054	
Upstream Blk Time (%)		0	0	
Queuing Penalty (veh)		0	0	
Storage Bay Dist (ft)	200			150
Storage Blk Time (%)	1	24	31	3
Queuing Penalty (veh)	10	249	223	22

Intersection: 22: 2100 North WB, Interval #3

Movement	WB	WB	WB	WB
Directions Served	LT	T	T	T
Maximum Queue (ft)	272	646	1577	315
Average Queue (ft)	126	352	482	137
95th Queue (ft)	320	750	1308	362
Link Distance (ft)		2054	2054	
Upstream Blk Time (%)		0	0	
Queuing Penalty (veh)		0	0	
Storage Bay Dist (ft)	200			150
Storage Blk Time (%)	5	21	29	3
Queuing Penalty (veh)	31	206	191	21

Intersection: 22: 2100 North WB, Interval #4

Movement	WB	WB	WB	WB
Directions Served	LT	T	T	T
Maximum Queue (ft)	223	469	662	259
Average Queue (ft)	78	326	344	106
95th Queue (ft)	259	693	793	326
Link Distance (ft)		2054	2054	
Upstream Blk Time (%)			0	
Queuing Penalty (veh)			0	
Storage Bay Dist (ft)	200			150
Storage Blk Time (%)	2	23	30	4
Queuing Penalty (veh)	13	219	201	30

Intersection: 22: 2100 North WB, All Intervals

Movement	WB	WB	WB	WB
Directions Served	LT	T	T	T
Maximum Queue (ft)	377	963	1591	408
Average Queue (ft)	100	331	365	116
95th Queue (ft)	305	758	928	341
Link Distance (ft)		2054	2054	
Upstream Blk Time (%)		0	0	
Queuing Penalty (veh)		0	0	
Storage Bay Dist (ft)	200			150
Storage Blk Time (%)	2	21	28	3
Queuing Penalty (veh)	15	204	188	21

Intersection: 23: 2100 North EB, Interval #1

Movement	EB	EB	SE
Directions Served	T	T	L
Maximum Queue (ft)	70	65	221
Average Queue (ft)	14	13	156
95th Queue (ft)	62	57	290
Link Distance (ft)	84	84	270
Upstream Blk Time (%)	0	0	4
Queuing Penalty (veh)	3	1	12
Storage Bay Dist (ft)			
Storage Blk Time (%)			
Queuing Penalty (veh)			

Intersection: 23: 2100 North EB, Interval #2

Movement	EB	EB	SE
Directions Served	T	T	L
Maximum Queue (ft)	38	38	255
Average Queue (ft)	8	8	165
95th Queue (ft)	49	49	283
Link Distance (ft)	84	84	270
Upstream Blk Time (%)	0	0	5
Queuing Penalty (veh)	2	2	16
Storage Bay Dist (ft)			
Storage Blk Time (%)			
Queuing Penalty (veh)			

Intersection: 23: 2100 North EB, Interval #3

Movement	EB	EB	SE
Directions Served	T	T	L
Maximum Queue (ft)	54	57	301
Average Queue (ft)	9	10	203
95th Queue (ft)	48	56	350
Link Distance (ft)	84	84	270
Upstream Blk Time (%)	0	0	12
Queuing Penalty (veh)	2	2	36
Storage Bay Dist (ft)			
Storage Blk Time (%)			
Queuing Penalty (veh)			

Intersection: 23: 2100 North EB, Interval #4

Movement	EB	EB	SE
Directions Served	T	T	L
Maximum Queue (ft)	57	57	292
Average Queue (ft)	7	8	193
95th Queue (ft)	41	43	329
Link Distance (ft)	84	84	270
Upstream Blk Time (%)	0	0	9
Queuing Penalty (veh)	2	1	26
Storage Bay Dist (ft)			
Storage Blk Time (%)			
Queuing Penalty (veh)			

Intersection: 23: 2100 North EB, All Intervals

Movement	EB	EB	SE
Directions Served	T	T	L
Maximum Queue (ft)	89	100	332
Average Queue (ft)	10	10	179
95th Queue (ft)	50	52	317
Link Distance (ft)	84	84	270
Upstream Blk Time (%)	0	0	8
Queuing Penalty (veh)	2	1	23
Storage Bay Dist (ft)			
Storage Blk Time (%)			
Queuing Penalty (veh)			

Intersection: 24: 2100 North EB, Interval #1

Movement	EB	EB	EB	EB
Directions Served	LT	T	T	T
Maximum Queue (ft)	61	313	311	70
Average Queue (ft)	9	225	214	15
95th Queue (ft)	86	386	360	132
Link Distance (ft)		2002	2002	
Upstream Blk Time (%)				
Queuing Penalty (veh)				
Storage Bay Dist (ft)	150			150
Storage Blk Time (%)		24	20	
Queuing Penalty (veh)		78	59	

Intersection: 24: 2100 North EB, Interval #2

Movement	EB	EB	EB	EB
Directions Served	LT	T	T	T
Maximum Queue (ft)	157	430	425	140
Average Queue (ft)	62	317	311	75
95th Queue (ft)	280	618	620	311
Link Distance (ft)		2002	2002	
Upstream Blk Time (%)				
Queuing Penalty (veh)				
Storage Bay Dist (ft)	150			150
Storage Blk Time (%)	0	41	37	
Queuing Penalty (veh)	0	138	116	

Intersection: 24: 2100 North EB, Interval #3

Movement	EB	EB	EB	EB
Directions Served	LT	T	T	T
Maximum Queue (ft)	197	528	521	209
Average Queue (ft)	108	393	385	110
95th Queue (ft)	372	755	753	377
Link Distance (ft)		2002	2002	
Upstream Blk Time (%)				
Queuing Penalty (veh)				
Storage Bay Dist (ft)	150			150
Storage Blk Time (%)		46	42	
Queuing Penalty (veh)		148	123	

Intersection: 24: 2100 North EB, Interval #4

Movement	EB	EB	EB	EB
Directions Served	LT	T	T	T
Maximum Queue (ft)	154	368	373	140
Average Queue (ft)	45	285	280	40
95th Queue (ft)	229	533	528	223
Link Distance (ft)		2002	2002	
Upstream Blk Time (%)				
Queuing Penalty (veh)				
Storage Bay Dist (ft)	150			150
Storage Blk Time (%)	0	35	32	
Queuing Penalty (veh)	0	112	94	

Intersection: 24: 2100 North EB, All Intervals

Movement	EB	EB	EB	EB
Directions Served	LT	T	T	T
Maximum Queue (ft)	250	550	541	209
Average Queue (ft)	56	305	298	60
95th Queue (ft)	263	600	595	277
Link Distance (ft)		2002	2002	
Upstream Blk Time (%)				
Queuing Penalty (veh)				
Storage Bay Dist (ft)	150			150
Storage Blk Time (%)	0	37	33	
Queuing Penalty (veh)	0	119	98	

Intersection: 25: 2100 North WB, Interval #1

Movement	NW
Directions Served	L
Maximum Queue (ft)	32
Average Queue (ft)	8
95th Queue (ft)	33
Link Distance (ft)	273
Upstream Blk Time (%)	
Queuing Penalty (veh)	
Storage Bay Dist (ft)	
Storage Blk Time (%)	
Queuing Penalty (veh)	

Intersection: 25: 2100 North WB, Interval #2

Movement	NW
Directions Served	L
Maximum Queue (ft)	38
Average Queue (ft)	11
95th Queue (ft)	40
Link Distance (ft)	273
Upstream Blk Time (%)	
Queuing Penalty (veh)	
Storage Bay Dist (ft)	
Storage Blk Time (%)	
Queuing Penalty (veh)	

Intersection: 25: 2100 North WB, Interval #3

Movement	NW
Directions Served	L
Maximum Queue (ft)	27
Average Queue (ft)	8
95th Queue (ft)	30
Link Distance (ft)	273
Upstream Blk Time (%)	
Queuing Penalty (veh)	
Storage Bay Dist (ft)	
Storage Blk Time (%)	
Queuing Penalty (veh)	

Intersection: 25: 2100 North WB, Interval #4

Movement	WB	NW
Directions Served	T	L
Maximum Queue (ft)	3	30
Average Queue (ft)	0	8
95th Queue (ft)	6	36
Link Distance (ft)	70	273
Upstream Blk Time (%)		
Queuing Penalty (veh)		
Storage Bay Dist (ft)		
Storage Blk Time (%)		
Queuing Penalty (veh)		

Intersection: 25: 2100 North WB, All Intervals

Movement	WB	NW
Directions Served	T	L
Maximum Queue (ft)	3	52
Average Queue (ft)	0	9
95th Queue (ft)	3	35
Link Distance (ft)	70	273
Upstream Blk Time (%)		
Queuing Penalty (veh)		
Storage Bay Dist (ft)		
Storage Blk Time (%)		
Queuing Penalty (veh)		

Intersection: 29: , Interval #1

Movement
Directions Served
Maximum Queue (ft)
Average Queue (ft)
95th Queue (ft)
Link Distance (ft)
Upstream Blk Time (%)
Queuing Penalty (veh)
Storage Bay Dist (ft)
Storage Blk Time (%)
Queuing Penalty (veh)

Intersection: 29: , Interval #2

Movement
Directions Served
Maximum Queue (ft)
Average Queue (ft)
95th Queue (ft)
Link Distance (ft)
Upstream Blk Time (%)
Queuing Penalty (veh)
Storage Bay Dist (ft)
Storage Blk Time (%)
Queuing Penalty (veh)

Intersection: 29: , Interval #3

Movement
Directions Served
Maximum Queue (ft)
Average Queue (ft)
95th Queue (ft)
Link Distance (ft)
Upstream Blk Time (%)
Queuing Penalty (veh)
Storage Bay Dist (ft)
Storage Blk Time (%)
Queuing Penalty (veh)

Intersection: 29: , Interval #4

Movement
Directions Served
Maximum Queue (ft)
Average Queue (ft)
95th Queue (ft)
Link Distance (ft)
Upstream Blk Time (%)
Queuing Penalty (veh)
Storage Bay Dist (ft)
Storage Blk Time (%)
Queuing Penalty (veh)

Intersection: 29: , All Intervals

Movement
Directions Served
Maximum Queue (ft)
Average Queue (ft)
95th Queue (ft)
Link Distance (ft)
Upstream Blk Time (%)
Queuing Penalty (veh)
Storage Bay Dist (ft)
Storage Blk Time (%)
Queuing Penalty (veh)

Intersection: 31: 400 East & Crossroads Blvd, Interval #1

Movement	EB	EB	WB	WB	NB	SB	SB
Directions Served	LT	R	LT	R	LTR	LT	R
Maximum Queue (ft)	185	36	237	32	52	134	84
Average Queue (ft)	62	5	87	5	28	66	38
95th Queue (ft)	182	74	249	63	58	150	109
Link Distance (ft)	649		1678		460	747	
Upstream Blk Time (%)							
Queuing Penalty (veh)							
Storage Bay Dist (ft)		150		100			100
Storage Blk Time (%)	2		5			14	0
Queuing Penalty (veh)	0		3			9	0

Intersection: 31: 400 East & Crossroads Blvd, Interval #2

Movement	EB	WB	WB	NB	SB	SB
Directions Served	LT	LT	R	LTR	LT	R
Maximum Queue (ft)	209	213	12	76	266	149
Average Queue (ft)	73	66	2	38	165	70
95th Queue (ft)	196	214	12	93	342	201
Link Distance (ft)	649	1678		460	747	
Upstream Blk Time (%)						
Queuing Penalty (veh)						
Storage Bay Dist (ft)			100			100
Storage Blk Time (%)	3	2			54	0
Queuing Penalty (veh)	0	2			35	0

Intersection: 31: 400 East & Crossroads Blvd, Interval #3

Movement	EB	EB	B36	WB	WB	NB	SB	SB
Directions Served	LT	R	T	LT	R	LTR	LT	R
Maximum Queue (ft)	327	35	10	418	63	76	337	130
Average Queue (ft)	142	5	1	156	5	37	207	55
95th Queue (ft)	382	73	21	494	64	79	508	173
Link Distance (ft)	649		444	1678		460	747	
Upstream Blk Time (%)	1							
Queuing Penalty (veh)	7							
Storage Bay Dist (ft)		150			100			100
Storage Blk Time (%)	6			9			49	0
Queuing Penalty (veh)	1			6			30	0

Intersection: 31: 400 East & Crossroads Blvd, Interval #4

Movement	EB	WB	WB	NB	SB	SB
Directions Served	LT	LT	R	LTR	LT	R
Maximum Queue (ft)	340	459	90	120	374	140
Average Queue (ft)	149	173	13	65	268	56
95th Queue (ft)	410	527	112	161	683	182
Link Distance (ft)	649	1678		460	747	
Upstream Blk Time (%)	0				5	
Queuing Penalty (veh)	2				0	
Storage Bay Dist (ft)			100			100
Storage Blk Time (%)	9	10			59	1
Queuing Penalty (veh)	1	7			36	1

Intersection: 31: 400 East & Crossroads Blvd, All Intervals

Movement	EB	EB	B36	WB	WB	NB	SB	SB
Directions Served	LT	R	T	LT	R	LTR	LT	R
Maximum Queue (ft)	450	71	10	585	182	133	483	200
Average Queue (ft)	107	3	0	120	6	42	176	55
95th Queue (ft)	314	51	10	398	71	107	477	170
Link Distance (ft)	649		444	1678		460	747	
Upstream Blk Time (%)	0						1	
Queuing Penalty (veh)	2						0	
Storage Bay Dist (ft)		150			100			100
Storage Blk Time (%)	5			7			44	0
Queuing Penalty (veh)	1			5			27	0

Intersection: 34: Crossroads Blvd, Interval #1

Movement
Directions Served
Maximum Queue (ft)
Average Queue (ft)
95th Queue (ft)
Link Distance (ft)
Upstream Blk Time (%)
Queuing Penalty (veh)
Storage Bay Dist (ft)
Storage Blk Time (%)
Queuing Penalty (veh)

Intersection: 34: Crossroads Blvd, Interval #2

Movement		
Directions Served		
Maximum Queue (ft)		
Average Queue (ft)		
95th Queue (ft)		
Link Distance (ft)		
Upstream Blk Time (%)		
Queuing Penalty (veh)		
Storage Bay Dist (ft)		
Storage Blk Time (%)		
Queuing Penalty (veh)		

Intersection: 34: Crossroads Blvd, Interval #3

Movement	EB	EB
Directions Served	T	T
Maximum Queue (ft)	87	91
Average Queue (ft)	12	13
95th Queue (ft)	183	191
Link Distance (ft)	901	901
Upstream Blk Time (%)		0
Queuing Penalty (veh)		0
Storage Bay Dist (ft)		
Storage Blk Time (%)		
Queuing Penalty (veh)		

Intersection: 34: Crossroads Blvd, Interval #4

Movement		
Directions Served		
Maximum Queue (ft)		
Average Queue (ft)		
95th Queue (ft)		
Link Distance (ft)		
Upstream Blk Time (%)		
Queuing Penalty (veh)		
Storage Bay Dist (ft)		
Storage Blk Time (%)		
Queuing Penalty (veh)		

Intersection: 34: Crossroads Blvd, All Intervals

Movement	EB	EB
Directions Served	T	T
Maximum Queue (ft)	87	91
Average Queue (ft)	3	3
95th Queue (ft)	89	93
Link Distance (ft)	901	901
Upstream Blk Time (%)		0
Queuing Penalty (veh)		0
Storage Bay Dist (ft)		
Storage Blk Time (%)		
Queuing Penalty (veh)		

Intersection: 38: , Interval #1

Movement	EB	EB	NB	NB	NB	NB	SB	SB	SB
Directions Served	L	R	L	L	T	T	T	T	R
Maximum Queue (ft)	243	307	180	192	208	198	2053	2071	350
Average Queue (ft)	176	220	121	134	138	140	1305	1320	212
95th Queue (ft)	299	347	191	208	220	208	2224	2243	466
Link Distance (ft)	951	951			1499	1499	2130	2130	
Upstream Blk Time (%)							5	6	
Queuing Penalty (veh)							0	0	
Storage Bay Dist (ft)			200	200					150
Storage Blk Time (%)			1	2	1			30	
Queuing Penalty (veh)			4	12	2			75	

Intersection: 38: , Interval #2

Movement	EB	EB	NB	NB	NB	NB	SB	SB	SB
Directions Served	L	R	L	L	T	T	T	T	R
Maximum Queue (ft)	313	421	200	210	238	229	2173	2171	350
Average Queue (ft)	229	298	153	158	160	158	2141	2139	244
95th Queue (ft)	397	515	243	256	254	229	2288	2284	484
Link Distance (ft)	951	951			1499	1499	2130	2130	
Upstream Blk Time (%)							28	32	
Queuing Penalty (veh)							0	0	
Storage Bay Dist (ft)			200	200					150
Storage Blk Time (%)			3	7	1			31	
Queuing Penalty (veh)			25	56	4			82	

Intersection: 38: , Interval #3

Movement	EB	EB	NB	NB	NB	NB	SB	SB	SB
Directions Served	L	R	L	L	T	T	T	T	R
Maximum Queue (ft)	366	368	237	251	241	242	2162	2171	350
Average Queue (ft)	284	274	187	197	171	172	2140	2149	211
95th Queue (ft)	508	519	270	279	265	264	2210	2186	467
Link Distance (ft)	951	951			1499	1499	2130	2130	
Upstream Blk Time (%)							30	35	
Queuing Penalty (veh)							0	0	
Storage Bay Dist (ft)			200	200					150
Storage Blk Time (%)			11	16	2			32	
Queuing Penalty (veh)			81	118	7			79	

Intersection: 38: , Interval #4

Movement	EB	EB	NB	NB	NB	NB	SB	SB	SB
Directions Served	L	R	L	L	T	T	T	T	R
Maximum Queue (ft)	424	433	225	242	241	262	2163	2163	350
Average Queue (ft)	308	314	169	177	162	169	2134	2141	235
95th Queue (ft)	580	566	274	297	296	292	2220	2207	480
Link Distance (ft)	951	951			1499	1499	2130	2130	
Upstream Blk Time (%)							31	36	
Queuing Penalty (veh)							0	0	
Storage Bay Dist (ft)			200	200					150
Storage Blk Time (%)			11	15	1			31	
Queuing Penalty (veh)			78	107	3			77	

Intersection: 38: , All Intervals

Movement	EB	EB	NB	NB	NB	NB	SB	SB	SB
Directions Served	L	R	L	L	T	T	T	T	R
Maximum Queue (ft)	451	521	257	283	299	288	2177	2180	350
Average Queue (ft)	249	276	158	167	157	160	1930	1937	226
95th Queue (ft)	471	500	254	269	263	253	2687	2690	475
Link Distance (ft)	951	951			1499	1499	2130	2130	
Upstream Blk Time (%)							24	27	
Queuing Penalty (veh)							0	0	
Storage Bay Dist (ft)			200	200					150
Storage Blk Time (%)			6	10	1			31	
Queuing Penalty (veh)			47	73	4			78	

Network Summary

Network wide Queuing Penalty, Interval #1: 2510
Network wide Queuing Penalty, Interval #2: 3717
Network wide Queuing Penalty, Interval #3: 3877
Network wide Queuing Penalty, Interval #4: 3936
Network wide Queuing Penalty, All Intervals: 3510

HALES ENGINEERING
innovative transportation solutions

SimTraffic LOS Report

Project: Saratoga Springs - Cold Spring Ranch
Analysis Period: *Future (2040) Background*
Time Period: *Evening Peak Hour* **Project #:** *UT16-928*

Intersection: Redwood Road & Crossroads Blvd
Type: Signalized

Approach	Movement	Demand Volume	Volume Served		Delay/Veh (sec)	
			Avg	%	Avg	LOS
NB	L	225	229	102	57.3	*E*
	T	650	648	100	25.4	*C*
	R	300	297	99	5.2	*A*
	Subtotal	1,175	1,174	100	26.5	*C*
SB	L	195	175	90	66.2	*E*
	T	1,048	999	95	21.4	*C*
	R	200	186	93	5.9	*A*
	Subtotal	1,443	1,360	94	25.0	*C*
EB	L	125	126	101	53.5	*D*
	T	325	318	98	49.9	*D*
	R	25	26	103	14.3	*B*
	Subtotal	475	470	99	48.9	*D*
WB	L	300	301	100	66.8	*E*
	T	526	526	100	40.8	*D*
	R	150	146	97	6.8	*A*
	Subtotal	976	973	100	43.7	*D*
Total		4,070	3,977	98	33.0	*C*

Intersection: Redwood Road & Commerce Drive
Type: Signalized

Approach	Movement	Demand Volume	Volume Served		Delay/Veh (sec)	
			Avg	%	Avg	LOS
NB	L	120	118	98	38.8	*D*
	T	770	762	99	15.5	*B*
	R	65	66	102	5.2	*A*
	Subtotal	955	946	99	17.7	*B*
SB	L	110	100	91	60.3	*E*
	T	1,278	1,191	93	11.4	*B*
	R	325	307	95	5.4	*A*
	Subtotal	1,713	1,598	93	13.3	*B*
EB	L	200	202	101	60.9	*E*
	T	55	60	109	46.0	*D*
	R	125	131	105	10.8	*B*
	Subtotal	380	393	103	41.9	*D*
WB	L	40	40	101	49.3	*D*
	T	40	40	101	42.5	*D*
	R	100	105	105	7.7	*A*
	Subtotal	180	185	103	24.2	*C*
Total		3,227	3,122	97	19.0	*B*

HALES ENGINEERING
innovative transportation solutions

SimTraffic LOS Report

Project: Saratoga Springs - Cold Spring Ranch
Analysis Period: *Future (2040) Background*
Time Period: *Evening Peak Hour* **Project #:** *UT16-928*

Intersection: Redwood Road & Aspen Hills Blvd
Type: Unsignalized

Approach	Movement	Demand Volume	Volume Served		Delay/Veh (sec)	
			Avg	%	Avg	LOS
NB	L	45	43	96	18.9	*C*
	T	980	978	100	0.7	*A*
	Subtotal	1,025	1,021	100	1.5	*A*
SB	T	1,635	1,525	93	1.0	*A*
	R	85	79	93	0.5	*A*
	Subtotal	1,720	1,604	93	1.0	*A*
EB	L	10	10	100	47.5	*E*
	R	25	26	103	20.8	*C*
	Subtotal	***35***	***36***	***103***	***28.2***	***D***
Total		2,781	2,661	96	1.5	*A*

Intersection: Redwood Road & Sergeant Court Drive
Type: Unsignalized

Approach	Movement	Demand Volume	Volume Served		Delay/Veh (sec)	
			Avg	%	Avg	LOS
NB	L	20	22	109	28.3	*D*
	T	1,050	1,046	100	1.9	*A*
	Subtotal	1,070	1,068	100	2.4	*A*
SB	T	1,640	1,537	94	1.0	*A*
	R	20	19	94	0.1	*A*
	Subtotal	1,660	1,556	94	1.0	*A*
EB	L	5	4	80	63.7	*F*
	R	25	24	95	25.5	*D*
	Subtotal	***30***	***28***	***93***	***31.0***	***D***
Total		2,762	2,652	96	1.9	*A*

HALES ENGINEERING
innovative transportation solutions

SimTraffic LOS Report

Project: Saratoga Springs - Cold Spring Ranch
Analysis Period: *Future (2040) Background*
Time Period: *Evening Peak Hour* **Project #:** *UT16-928*

Intersection: 3600 West & 2100 North WB
Type: Signalized

Approach	Movement	Demand Volume	Volume Served		Delay/Veh (sec)	
			Avg	%	Avg	LOS
NB	L	45	40	89	11.5	*B*
	T	396	411	104	31.3	*C*
	Subtotal	441	451	102	29.5	*C*
SB	T	1,062	1,057	100	34.6	*C*
	R	258	262	102	9.1	*A*
	Subtotal	1,320	1,319	100	29.5	*C*
WB	L	350	348	99	29.9	*C*
	T	491	500	102	23.7	*C*
	R	610	623	102	7.0	*A*
	Subtotal	1,451	1,471	101	18.1	*B*
Total		3,210	3,241	101	24.4	*C*

Intersection: 3600 West & 2100 North EB
Type: Signalized

Approach	Movement	Demand Volume	Volume Served		Delay/Veh (sec)	
			Avg	%	Avg	LOS
NB	T	190	193	101	46.2	*D*
	R	225	228	101	32.8	*C*
	Subtotal	415	421	101	38.9	*D*
SB	L	1,000	965	97	33.7	*C*
	T	412	438	106	21.6	*C*
	Subtotal	1,412	1,403	99	29.9	*C*
EB	L	250	257	103	30.2	*C*
	T	850	850	100	24.2	*C*
	R	200	198	99	3.8	*A*
	Subtotal	1,300	1,305	100	22.3	*C*
Total		3,127	3,129	100	28.0	*C*

HALES ENGINEERING
innovative transportation solutions

SimTraffic LOS Report

Project: Saratoga Springs - Cold Spring Ranch
Analysis Period: *Future (2040) Background*
Time Period: *Evening Peak Hour* **Project #:** *UT16-928*

Intersection: 400 East & Crossroads Blvd
Type: Signalized

Approach	Movement	Demand Volume	Volume Served		Delay/Veh (sec)	
			Avg	%	Avg	LOS
NB	L	25	22	87	42.5	*D*
	T	10	11	107	32.7	*C*
	R	45	48	107	6.8	*A*
	Subtotal	80	81	101	20.0	*B*
SB	L	25	24	95	40.9	*D*
	T	40	37	93	40.8	*D*
	R	90	91	101	7.2	*A*
	Subtotal	155	152	98	20.7	*C*
EB	L	35	31	89	14.5	*B*
	T	730	716	98	4.4	*A*
	R	35	34	98	2.2	*A*
	Subtotal	800	781	98	4.7	*A*
WB	L	85	85	100	28.2	*C*
	T	860	863	100	10.1	*B*
	R	10	10	98	2.2	*A*
	Subtotal	955	958	100	11.6	*B*
Total		1,990	1,972	99	9.9	*A*

2: Redwood Road & Crossroads Blvd Performance by movement Interval #1 5:00

Movement	EBL	EBT	EBR	WBL	WBT	WBR	NBL	NBT	NBR	SBL	SBT	SBR
Denied Delay (hr)	0.0	0.0	0.0	0.0	0.0	0.0	0.0	0.0	0.1	0.0	0.0	0.0
Denied Del/Veh (s)	2.7	0.2	3.1	0.0	0.0	0.0	2.6	0.5	2.6	0.2	0.0	0.0
Total Delay (hr)	0.5	1.1	0.0	1.2	1.5	0.1	1.0	1.1	0.1	0.9	1.5	0.1
Total Del/Veh (s)	49.3	46.1	11.9	59.1	38.8	6.7	55.0	24.1	4.9	62.4	21.0	5.5
Vehicles Entered	33	77	6	69	128	34	59	160	72	47	258	47
Vehicles Exited	33	78	6	69	128	34	59	160	73	47	257	46
Hourly Exit Rate	132	312	24	276	512	136	236	640	292	188	1028	184
Input Volume	123	319	25	295	516	147	221	639	295	192	1029	196
% of Volume	107	98	96	94	99	93	107	100	99	98	100	94

2: Redwood Road & Crossroads Blvd Performance by movement Interval #1 5:00

Movement	All
Denied Delay (hr)	0.2
Denied Del/Veh (s)	0.6
Total Delay (hr)	9.1
Total Del/Veh (s)	31.4
Vehicles Entered	990
Vehicles Exited	990
Hourly Exit Rate	3960
Input Volume	3997
% of Volume	99

2: Redwood Road & Crossroads Blvd Performance by movement Interval #2 5:15

Movement	EBL	EBT	EBR	WBL	WBT	WBR	NBL	NBT	NBR	SBL	SBT	SBR
Denied Delay (hr)	0.0	0.0	0.0	0.0	0.0	0.0	0.0	0.0	0.1	0.0	0.0	0.0
Denied Del/Veh (s)	2.8	0.2	3.1	0.0	0.0	0.0	2.5	0.6	2.5	0.2	0.0	0.0
Total Delay (hr)	0.5	1.1	0.0	1.5	1.6	0.1	1.1	1.3	0.1	0.9	1.6	0.1
Total Del/Veh (s)	53.4	44.3	9.6	62.3	37.2	6.6	58.3	26.2	5.8	67.3	22.3	6.6
Vehicles Entered	32	86	7	81	144	42	62	167	85	46	251	50
Vehicles Exited	34	87	6	78	144	41	65	158	84	45	235	49
Hourly Exit Rate	136	348	24	312	576	164	260	632	336	180	940	196
Input Volume	132	342	26	316	554	158	237	684	316	205	1106	211
% of Volume	103	102	92	99	104	104	110	92	106	88	85	93

2: Redwood Road & Crossroads Blvd Performance by movement Interval #2 5:15

Movement	All
Denied Delay (hr)	0.2
Denied Del/Veh (s)	0.6
Total Delay (hr)	10.0
Total Del/Veh (s)	32.6
Vehicles Entered	1053
Vehicles Exited	1026
Hourly Exit Rate	4104
Input Volume	4287
% of Volume	96

2: Redwood Road & Crossroads Blvd Performance by movement Interval #3 5:30

Movement	EBL	EBT	EBR	WBL	WBT	WBR	NBL	NBT	NBR	SBL	SBT	SBR
Denied Delay (hr)	0.0	0.0	0.0	0.0	0.0	0.0	0.0	0.0	0.1	0.0	0.0	0.0
Denied Del/Veh (s)	2.9	0.2	3.1	0.0	0.0	0.0	2.6	0.5	2.7	0.2	0.0	0.0
Total Delay (hr)	0.4	1.2	0.0	1.6	1.5	0.1	0.9	1.1	0.1	0.8	1.3	0.1
Total Del/Veh (s)	51.5	49.4	14.9	70.4	41.9	6.2	53.9	21.8	4.3	60.9	17.2	5.3
Vehicles Entered	28	80	6	73	122	35	54	159	73	41	239	48
Vehicles Exited	25	80	6	77	127	35	55	165	72	40	246	48
Hourly Exit Rate	100	320	24	308	508	140	220	660	288	160	984	192
Input Volume	123	319	25	295	516	147	221	639	295	192	1029	196
% of Volume	81	100	96	104	98	95	100	103	98	83	96	98

2: Redwood Road & Crossroads Blvd Performance by movement Interval #3 5:30

Movement	All
Denied Delay (hr)	0.1
Denied Del/Veh (s)	0.6
Total Delay (hr)	8.9
Total Del/Veh (s)	31.0
Vehicles Entered	958
Vehicles Exited	976
Hourly Exit Rate	3904
Input Volume	3997
% of Volume	98

2: Redwood Road & Crossroads Blvd Performance by movement Interval #4 5:45

Movement	EBL	EBT	EBR	WBL	WBT	WBR	NBL	NBT	NBR	SBL	SBT	SBR
Denied Delay (hr)	0.0	0.0	0.0	0.0	0.0	0.0	0.0	0.0	0.1	0.0	0.0	0.0
Denied Del/Veh (s)	2.7	0.2	3.2	0.0	0.0	0.0	2.6	0.5	2.5	0.1	0.0	0.0
Total Delay (hr)	0.4	1.1	0.0	1.4	1.5	0.1	0.9	1.1	0.1	0.8	1.4	0.1
Total Del/Veh (s)	45.8	47.1	11.8	63.4	43.0	7.1	59.5	22.6	4.9	59.6	19.2	5.8
Vehicles Entered	31	78	7	77	124	33	50	162	76	42	242	48
Vehicles Exited	31	70	7	71	114	33	52	166	76	43	245	49
Hourly Exit Rate	124	280	28	284	456	132	208	664	304	172	980	196
Input Volume	123	319	25	295	516	147	221	639	295	192	1029	196
% of Volume	101	88	112	96	88	90	94	104	103	90	95	100

2: Redwood Road & Crossroads Blvd Performance by movement Interval #4 5:45

Movement	All
Denied Delay (hr)	0.1
Denied Del/Veh (s)	0.5
Total Delay (hr)	8.8
Total Del/Veh (s)	31.2
Vehicles Entered	970
Vehicles Exited	957
Hourly Exit Rate	3828
Input Volume	3997
% of Volume	96

2: Redwood Road & Crossroads Blvd Performance by movement Entire Run

Movement	EBL	EBT	EBR	WBL	WBT	WBR	NBL	NBT	NBR	SBL	SBT	SBR
Denied Delay (hr)	0.1	0.0	0.0	0.0	0.0	0.0	0.2	0.1	0.2	0.0	0.0	0.0
Denied Del/Veh (s)	2.8	0.2	3.4	0.0	0.0	0.0	2.6	0.6	2.6	0.2	0.0	0.0
Total Delay (hr)	1.9	4.4	0.1	5.7	6.1	0.3	3.9	4.5	0.4	3.3	5.8	0.3
Total Del/Veh (s)	53.1	49.0	12.4	67.6	41.6	6.8	60.8	24.7	5.1	67.2	20.8	6.0
Vehicles Entered	124	320	24	300	518	144	225	647	306	175	990	193
Vehicles Exited	123	315	25	296	514	143	231	649	306	175	984	192
Hourly Exit Rate	123	315	25	296	514	143	231	649	306	175	984	192
Input Volume	125	325	25	300	526	150	225	650	300	195	1048	200
% of Volume	98	97	99	99	98	95	103	100	102	90	94	96

2: Redwood Road & Crossroads Blvd Performance by movement Entire Run

Movement	All
Denied Delay (hr)	0.6
Denied Del/Veh (s)	0.6
Total Delay (hr)	36.8
Total Del/Veh (s)	32.9
Vehicles Entered	3966
Vehicles Exited	3953
Hourly Exit Rate	3953
Input Volume	4070
% of Volume	97

3: Redwood Road & Commerce Drive Performance by movement Interval #1 5:00

Movement	EBL	EBT	EBR	WBL	WBT	WBR	NBL	NBT	NBR	SBL	SBT	SBR
Denied Delay (hr)	0.0	0.0	0.0	0.0	0.0	0.0	0.0	0.0	0.0	0.0	0.0	0.0
Denied Del/Veh (s)	2.7	0.7	2.6	3.8	0.7	3.9	0.0	0.0	0.0	0.0	0.0	0.1
Total Delay (hr)	0.8	0.2	0.1	0.1	0.1	0.0	0.3	0.9	0.0	0.5	1.1	0.1
Total Del/Veh (s)	54.0	40.1	10.9	39.9	38.2	6.9	37.1	15.9	5.4	56.7	12.6	5.3
Vehicles Entered	46	16	30	11	8	24	30	188	16	28	306	79
Vehicles Exited	49	16	30	11	10	24	32	188	16	30	311	80
Hourly Exit Rate	196	64	120	44	40	96	128	752	64	120	1244	320
Input Volume	196	54	123	39	39	98	118	756	64	108	1256	319
% of Volume	100	119	98	113	103	98	108	99	100	111	99	100

3: Redwood Road & Commerce Drive Performance by movement Interval #1 5:00

Movement	All
Denied Delay (hr)	0.1
Denied Del/Veh (s)	0.5
Total Delay (hr)	4.3
Total Del/Veh (s)	19.1
Vehicles Entered	782
Vehicles Exited	797
Hourly Exit Rate	3188
Input Volume	3170
% of Volume	101

3: Redwood Road & Commerce Drive Performance by movement Interval #2 5:15

Movement	EBL	EBT	EBR	WBL	WBT	WBR	NBL	NBT	NBR	SBL	SBT	SBR
Denied Delay (hr)	0.0	0.0	0.0	0.0	0.0	0.0	0.0	0.0	0.0	0.0	0.0	0.0
Denied Del/Veh (s)	2.6	0.7	2.7	3.5	0.6	3.9	0.0	0.0	0.1	0.0	0.0	0.1
Total Delay (hr)	1.0	0.2	0.1	0.2	0.1	0.1	0.3	1.0	0.0	0.5	1.0	0.1
Total Del/Veh (s)	60.6	41.0	9.5	43.2	42.0	7.9	38.5	17.1	5.6	61.3	11.7	5.7
Vehicles Entered	51	15	32	12	11	27	29	194	17	29	304	78
Vehicles Exited	51	15	31	12	11	26	29	197	17	29	300	78
Hourly Exit Rate	204	60	124	48	44	104	116	788	68	116	1200	312
Input Volume	211	58	132	42	42	105	126	811	68	116	1345	342
% of Volume	97	103	94	114	105	99	92	97	100	100	89	91

3: Redwood Road & Commerce Drive Performance by movement Interval #2 5:15

Movement	All
Denied Delay (hr)	0.1
Denied Del/Veh (s)	0.5
Total Delay (hr)	4.5
Total Del/Veh (s)	19.8
Vehicles Entered	799
Vehicles Exited	796
Hourly Exit Rate	3184
Input Volume	3398
% of Volume	94

3: Redwood Road & Commerce Drive Performance by movement Interval #3 5:30

Movement	EBL	EBT	EBR	WBL	WBT	WBR	NBL	NBT	NBR	SBL	SBT	SBR
Denied Delay (hr)	0.0	0.0	0.0	0.0	0.0	0.0	0.0	0.0	0.0	0.0	0.0	0.0
Denied Del/Veh (s)	2.7	0.8	2.8	4.1	0.5	3.9	0.1	0.0	0.0	0.0	0.0	0.1
Total Delay (hr)	0.9	0.2	0.1	0.1	0.1	0.1	0.3	0.8	0.0	0.4	1.0	0.1
Total Del/Veh (s)	59.0	42.4	10.0	43.4	43.2	7.9	33.9	14.2	3.8	59.2	11.6	6.4
Vehicles Entered	49	14	34	8	9	26	34	184	14	24	293	79
Vehicles Exited	52	15	34	9	10	27	34	181	15	25	286	78
Hourly Exit Rate	208	60	136	36	40	108	136	724	60	100	1144	312
Input Volume	196	54	123	39	39	98	118	756	64	108	1256	319
% of Volume	106	111	111	92	103	110	115	96	94	93	91	98

3: Redwood Road & Commerce Drive Performance by movement Interval #3 5:30

Movement	All
Denied Delay (hr)	0.1
Denied Del/Veh (s)	0.5
Total Delay (hr)	4.1
Total Del/Veh (s)	18.4
Vehicles Entered	768
Vehicles Exited	766
Hourly Exit Rate	3064
Input Volume	3170
% of Volume	97

3: Redwood Road & Commerce Drive Performance by movement Interval #4 5:45

Movement	EBL	EBT	EBR	WBL	WBT	WBR	NBL	NBT	NBR	SBL	SBT	SBR
Denied Delay (hr)	0.0	0.0	0.0	0.0	0.0	0.0	0.0	0.0	0.0	0.0	0.0	0.0
Denied Del/Veh (s)	2.8	0.7	2.7	4.0	0.4	3.9	0.0	0.0	0.0	0.0	0.0	0.1
Total Delay (hr)	0.8	0.2	0.1	0.1	0.1	0.0	0.3	0.7	0.0	0.4	0.9	0.1
Total Del/Veh (s)	57.3	46.7	9.5	48.1	43.4	7.3	33.7	12.4	5.0	59.8	10.1	5.3
Vehicles Entered	48	14	31	11	9	22	28	192	17	25	293	71
Vehicles Exited	47	14	32	11	9	22	26	190	17	22	289	71
Hourly Exit Rate	188	56	128	44	36	88	104	760	68	88	1156	284
Input Volume	196	54	123	39	39	98	118	756	64	108	1256	319
% of Volume	96	104	104	113	92	90	88	101	106	81	92	89

3: Redwood Road & Commerce Drive Performance by movement Interval #4 5:45

Movement	All
Denied Delay (hr)	0.1
Denied Del/Veh (s)	0.5
Total Delay (hr)	3.8
Total Del/Veh (s)	17.2
Vehicles Entered	761
Vehicles Exited	750
Hourly Exit Rate	3000
Input Volume	3170
% of Volume	95

3: Redwood Road & Commerce Drive Performance by movement Entire Run

Movement	EBL	EBT	EBR	WBL	WBT	WBR	NBL	NBT	NBR	SBL	SBT	SBR
Denied Delay (hr)	0.1	0.0	0.1	0.0	0.0	0.1	0.0	0.0	0.0	0.0	0.0	0.0
Denied Del/Veh (s)	2.7	0.7	2.7	3.8	0.5	3.8	0.0	0.0	0.0	0.0	0.0	0.1
Total Delay (hr)	3.5	0.8	0.4	0.5	0.5	0.2	1.2	3.3	0.1	1.8	3.9	0.5
Total Del/Veh (s)	62.0	45.2	10.4	45.6	43.8	7.8	36.4	15.3	5.2	60.8	11.7	5.7
Vehicles Entered	195	59	126	42	38	100	121	758	64	107	1196	308
Vehicles Exited	199	60	126	42	40	100	121	756	65	106	1186	307
Hourly Exit Rate	199	60	126	42	40	100	121	756	65	106	1186	307
Input Volume	200	55	125	40	40	100	120	770	65	110	1278	325
% of Volume	100	109	101	106	101	100	101	98	100	96	93	95

3: Redwood Road & Commerce Drive Performance by movement Entire Run

Movement	All
Denied Delay (hr)	0.4
Denied Del/Veh (s)	0.5
Total Delay (hr)	16.7
Total Del/Veh (s)	19.1
Vehicles Entered	3114
Vehicles Exited	3108
Hourly Exit Rate	3108
Input Volume	3227
% of Volume	96

11: Redwood Road & Aspen Hills Blvd Performance by movement Interval #1 5:00

Movement	EBL	EBR	NBL	NBT	SBT	SBR	All
Denied Delay (hr)	0.0	0.0	0.0	0.0	0.0	0.0	0.0
Denied Del/Veh (s)	0.2	0.1	0.0	0.0	0.0	0.0	0.0
Total Delay (hr)	0.0	0.0	0.1	0.0	0.1	0.0	0.3
Total Del/Veh (s)	45.2	27.3	16.8	0.7	0.9	0.4	1.5
Vehicles Entered	2	6	13	241	386	19	667
Vehicles Exited	2	6	13	238	386	19	664
Hourly Exit Rate	8	24	52	952	1544	76	2656
Input Volume	10	25	44	963	1606	84	2732
% of Volume	80	96	118	99	96	90	97

11: Redwood Road & Aspen Hills Blvd Performance by movement Interval #2 5:15

Movement	EBL	EBR	NBL	NBT	SBT	SBR	All
Denied Delay (hr)	0.0	0.0	0.0	0.0	0.0	0.0	0.0
Denied Del/Veh (s)	0.1	0.2	0.0	0.0	0.0	0.0	0.0
Total Delay (hr)	0.0	0.0	0.1	0.0	0.1	0.0	0.3
Total Del/Veh (s)	54.2	19.8	23.2	0.7	1.0	0.4	1.5
Vehicles Entered	2	7	10	247	383	19	668
Vehicles Exited	2	7	10	249	389	19	676
Hourly Exit Rate	8	28	40	996	1556	76	2704
Input Volume	10	26	47	1033	1722	89	2927
% of Volume	80	108	85	96	90	85	92

11: Redwood Road & Aspen Hills Blvd Performance by movement Interval #3 5:30

Movement	EBL	EBR	NBL	NBT	SBT	SBR	All
Denied Delay (hr)	0.0	0.0	0.0	0.0	0.0	0.0	0.0
Denied Del/Veh (s)	0.1	0.1	0.0	0.0	0.0	0.0	0.0
Total Delay (hr)	0.0	0.0	0.0	0.0	0.1	0.0	0.2
Total Del/Veh (s)	38.5	14.5	18.9	0.7	0.9	0.4	1.3
Vehicles Entered	2	6	9	247	376	19	659
Vehicles Exited	2	6	9	245	374	19	655
Hourly Exit Rate	8	24	36	980	1496	76	2620
Input Volume	10	25	44	963	1606	84	2732
% of Volume	80	96	82	102	93	90	96

11: Redwood Road & Aspen Hills Blvd Performance by movement Interval #4 5:45

Movement	EBL	EBR	NBL	NBT	SBT	SBR	All
Denied Delay (hr)	0.0	0.0	0.0	0.0	0.0	0.0	0.0
Denied Del/Veh (s)	0.1	0.1	0.0	0.0	0.0	0.0	0.0
Total Delay (hr)	0.0	0.0	0.1	0.0	0.1	0.0	0.3
Total Del/Veh (s)	44.1	22.4	22.5	0.7	0.9	0.4	1.5
Vehicles Entered	3	6	11	235	382	20	657
Vehicles Exited	2	6	10	237	380	20	655
Hourly Exit Rate	8	24	40	948	1520	80	2620
Input Volume	10	25	44	963	1606	84	2732
% of Volume	80	96	91	98	95	95	96

11: Redwood Road & Aspen Hills Blvd Performance by movement Entire Run

Movement	EBL	EBR	NBL	NBT	SBT	SBR	All
Denied Delay (hr)	0.0	0.0	0.0	0.0	0.0	0.0	0.0
Denied Del/Veh (s)	0.1	0.1	0.0	0.0	0.0	0.0	0.0
Total Delay (hr)	0.1	0.1	0.2	0.2	0.4	0.0	1.1
Total Del/Veh (s)	49.2	21.0	20.2	0.7	0.9	0.4	1.5
Vehicles Entered	9	24	42	970	1527	76	2648
Vehicles Exited	9	24	42	969	1530	77	2651
Hourly Exit Rate	9	24	42	969	1530	77	2651
Input Volume	10	25	45	980	1635	85	2781
% of Volume	90	95	94	99	94	90	95

13: Redwood Road & Sergeant Court Drive Performance by movement Interval #1 5:00

Movement	EBL	EBR	NBL	NBT	SBT	SBR	All
Denied Delay (hr)	0.0	0.0	0.0	0.0	0.0	0.0	0.0
Denied Del/Veh (s)	2.6	0.2	0.1	0.0	0.0	0.0	0.0
Total Delay (hr)	0.0	0.1	0.0	0.1	0.1	0.0	0.4
Total Del/Veh (s)	35.8	23.5	27.0	1.9	1.0	0.1	1.9
Vehicles Entered	1	7	5	257	390	5	665
Vehicles Exited	1	7	5	260	393	5	671
Hourly Exit Rate	4	28	20	1040	1572	20	2684
Input Volume	5	25	20	1032	1612	20	2714
% of Volume	80	112	100	101	98	100	99

13: Redwood Road & Sergeant Court Drive Performance by movement Interval #2 5:15

Movement	EBL	EBR	NBL	NBT	SBT	SBR	All
Denied Delay (hr)	0.0	0.0	0.0	0.0	0.0	0.0	0.0
Denied Del/Veh (s)	4.6	0.1	0.1	0.0	0.0	0.0	0.0
Total Delay (hr)	0.0	0.0	0.0	0.2	0.1	0.0	0.4
Total Del/Veh (s)	51.6	22.2	29.2	2.0	1.0	0.1	1.9
Vehicles Entered	1	7	6	268	395	5	682
Vehicles Exited	1	7	5	263	393	5	674
Hourly Exit Rate	4	28	20	1052	1572	20	2696
Input Volume	5	26	21	1106	1726	21	2905
% of Volume	80	108	95	95	91	95	93

13: Redwood Road & Sergeant Court Drive Performance by movement Interval #3 5:30

Movement	EBL	EBR	NBL	NBT	SBT	SBR	All
Denied Delay (hr)	0.0	0.0	0.0	0.0	0.0	0.0	0.0
Denied Del/Veh (s)	3.0	0.1	0.2	0.0	0.0	0.0	0.0
Total Delay (hr)	0.0	0.1	0.0	0.1	0.1	0.0	0.3
Total Del/Veh (s)	43.9	26.6	26.5	1.7	1.0	0.0	1.9
Vehicles Entered	2	6	5	255	378	4	650
Vehicles Exited	2	6	6	260	378	4	656
Hourly Exit Rate	8	24	24	1040	1512	16	2624
Input Volume	5	25	20	1032	1612	20	2714
% of Volume	160	96	120	101	94	80	97

13: Redwood Road & Sergeant Court Drive Performance by movement Interval #4 5:45

Movement	EBL	EBR	NBL	NBT	SBT	SBR	All
Denied Delay (hr)	0.0	0.0	0.0	0.0	0.0	0.0	0.0
Denied Del/Veh (s)	3.9	0.2	0.2	0.0	0.0	0.0	0.0
Total Delay (hr)	0.0	0.0	0.0	0.1	0.1	0.0	0.3
Total Del/Veh (s)	60.3	25.4	26.9	1.7	0.9	0.1	1.7
Vehicles Entered	1	6	5	256	374	5	647
Vehicles Exited	1	6	4	252	372	5	640
Hourly Exit Rate	4	24	16	1008	1488	20	2560
Input Volume	5	25	20	1032	1612	20	2714
% of Volume	80	96	80	98	92	100	94

13: Redwood Road & Sergeant Court Drive Performance by movement Entire Run

Movement	EBL	EBR	NBL	NBT	SBT	SBR	All
Denied Delay (hr)	0.0	0.0	0.0	0.0	0.0	0.0	0.0
Denied Del/Veh (s)	4.3	0.1	0.1	0.0	0.0	0.0	0.0
Total Delay (hr)	0.1	0.2	0.2	0.5	0.4	0.0	1.4
Total Del/Veh (s)	47.1	26.2	28.7	1.9	1.0	0.1	1.9
Vehicles Entered	4	26	21	1036	1538	19	2644
Vehicles Exited	4	26	20	1035	1537	19	2641
Hourly Exit Rate	4	26	20	1035	1537	19	2641
Input Volume	5	25	20	1050	1640	20	2762
% of Volume	80	103	99	99	94	94	96

19: 3600 West & 2100 North WB Performance by movement Interval #1 5:00

Movement	WBL	WBT	WBR	NBL	NBT	SBT	SBR	All
Denied Delay (hr)	0.0	0.0	0.0	0.0	0.0	0.0	0.0	0.1
Denied Del/Veh (s)	0.0	0.0	0.0	0.0	0.0	0.4	2.4	0.3
Total Delay (hr)	0.8	0.8	0.3	0.0	0.8	2.6	0.2	5.5
Total Del/Veh (s)	27.6	22.9	6.1	11.0	32.0	34.0	8.3	23.6
Vehicles Entered	93	124	154	10	88	263	63	795
Vehicles Exited	97	130	157	10	84	253	63	794
Hourly Exit Rate	388	520	628	40	336	1012	252	3176
Input Volume	344	482	599	44	389	1043	253	3154
% of Volume	113	108	105	91	86	97	100	101

19: 3600 West & 2100 North WB Performance by movement Interval #2 5:15

Movement	WBL	WBT	WBR	NBL	NBT	SBT	SBR	All
Denied Delay (hr)	0.0	0.0	0.0	0.0	0.0	0.0	0.0	0.1
Denied Del/Veh (s)	0.0	0.0	0.0	0.0	0.0	0.4	2.4	0.3
Total Delay (hr)	0.8	0.9	0.3	0.0	0.9	2.7	0.2	5.9
Total Del/Veh (s)	33.6	24.9	7.8	10.9	28.5	32.5	9.2	24.2
Vehicles Entered	86	134	159	11	110	275	68	843
Vehicles Exited	83	126	157	12	113	286	69	846
Hourly Exit Rate	332	504	628	48	452	1144	276	3384
Input Volume	368	517	642	47	416	1118	272	3380
% of Volume	90	97	98	102	109	102	101	100

19: 3600 West & 2100 North WB Performance by movement Interval #3 5:30

Movement	WBL	WBT	WBR	NBL	NBT	SBT	SBR	All
Denied Delay (hr)	0.0	0.0	0.0	0.0	0.0	0.0	0.0	0.1
Denied Del/Veh (s)	0.0	0.0	0.0	0.0	0.0	0.4	2.5	0.3
Total Delay (hr)	0.6	0.8	0.3	0.0	0.9	2.6	0.1	5.3
Total Del/Veh (s)	25.6	21.6	6.2	8.2	32.3	35.1	8.1	23.5
Vehicles Entered	85	121	155	8	92	254	62	777
Vehicles Exited	89	129	157	8	90	247	62	782
Hourly Exit Rate	356	516	628	32	360	988	248	3128
Input Volume	344	482	599	44	389	1043	253	3154
% of Volume	103	107	105	73	93	95	98	99

19: 3600 West & 2100 North WB Performance by movement Interval #4 5:45

Movement	WBL	WBT	WBR	NBL	NBT	SBT	SBR	All
Denied Delay (hr)	0.0	0.0	0.0	0.0	0.0	0.0	0.0	0.1
Denied Del/Veh (s)	0.0	0.0	0.0	0.0	0.0	0.4	2.6	0.3
Total Delay (hr)	0.8	0.8	0.3	0.0	0.8	2.2	0.1	5.0
Total Del/Veh (s)	30.9	24.1	7.6	8.4	28.1	29.3	7.6	22.6
Vehicles Entered	87	119	146	10	94	252	62	770
Vehicles Exited	83	114	145	10	97	256	62	767
Hourly Exit Rate	332	456	580	40	388	1024	248	3068
Input Volume	344	482	599	44	389	1043	253	3154
% of Volume	97	95	97	91	100	98	98	97

19: 3600 West & 2100 North WB Performance by movement Entire Run

Movement	WBL	WBT	WBR	NBL	NBT	SBT	SBR	All
Denied Delay (hr)	0.0	0.0	0.0	0.0	0.0	0.1	0.2	0.3
Denied Del/Veh (s)	0.0	0.0	0.0	0.0	0.0	0.4	2.5	0.3
Total Delay (hr)	3.0	3.4	1.2	0.1	3.3	10.1	0.6	21.8
Total Del/Veh (s)	30.1	24.0	7.0	9.8	31.1	34.5	8.5	24.3
Vehicles Entered	352	498	614	40	385	1044	255	3188
Vehicles Exited	352	499	616	40	385	1043	255	3190
Hourly Exit Rate	352	499	616	40	385	1043	255	3190
Input Volume	350	491	610	45	396	1062	258	3210
% of Volume	101	102	101	89	97	98	99	99

20: 3600 West & 2100 North EB Performance by movement Interval #1 5:00

Movement	EBL	EBT	EBR	NBT	NBR	SBL	SBT	All
Denied Delay (hr)	0.0	0.0	0.0	0.0	0.0	0.0	0.0	0.0
Denied Del/Veh (s)	0.0	0.0	0.0	0.2	0.1	0.0	0.0	0.0
Total Delay (hr)	0.4	1.4	0.1	0.5	0.4	2.3	0.7	5.9
Total Del/Veh (s)	27.2	22.3	3.9	41.4	28.7	33.5	22.4	26.5
Vehicles Entered	56	215	47	44	51	232	119	764
Vehicles Exited	58	218	47	40	50	235	116	764
Hourly Exit Rate	232	872	188	160	200	940	464	3056
Input Volume	246	835	196	187	221	982	405	3072
% of Volume	94	104	96	86	90	96	115	99

20: 3600 West & 2100 North EB Performance by movement Interval #2 5:15

Movement	EBL	EBT	EBR	NBT	NBR	SBL	SBT	All
Denied Delay (hr)	0.0	0.0	0.0	0.0	0.0	0.0	0.0	0.0
Denied Del/Veh (s)	0.0	0.0	0.0	0.2	0.1	0.1	0.0	0.1
Total Delay (hr)	0.6	1.6	0.1	0.8	0.6	2.5	0.6	6.7
Total Del/Veh (s)	29.0	26.2	4.1	48.2	31.8	33.4	20.3	28.4
Vehicles Entered	68	215	56	51	60	260	109	819
Vehicles Exited	67	213	56	55	60	256	112	819
Hourly Exit Rate	268	852	224	220	240	1024	448	3276
Input Volume	263	895	211	200	237	1053	434	3293
% of Volume	102	95	106	110	101	97	103	99

20: 3600 West & 2100 North EB Performance by movement Interval #3 5:30

Movement	EBL	EBT	EBR	NBT	NBR	SBL	SBT	All
Denied Delay (hr)	0.0	0.0	0.0	0.0	0.0	0.0	0.0	0.0
Denied Del/Veh (s)	0.0	0.0	0.0	0.2	0.1	0.0	0.0	0.0
Total Delay (hr)	0.5	1.4	0.1	0.5	0.4	2.1	0.7	5.7
Total Del/Veh (s)	27.7	21.5	4.0	43.0	28.2	32.0	21.6	25.7
Vehicles Entered	60	224	51	42	51	224	112	764
Vehicles Exited	61	226	50	40	51	229	108	765
Hourly Exit Rate	244	904	200	160	204	916	432	3060
Input Volume	246	835	196	187	221	982	405	3072
% of Volume	99	108	102	86	92	93	107	100

20: 3600 West & 2100 North EB Performance by movement Interval #4 5:45

Movement	EBL	EBT	EBR	NBT	NBR	SBL	SBT	All
Denied Delay (hr)	0.0	0.0	0.0	0.0	0.0	0.0	0.0	0.0
Denied Del/Veh (s)	0.0	0.0	0.0	0.2	0.2	0.0	0.0	0.0
Total Delay (hr)	0.5	1.5	0.1	0.5	0.4	1.9	0.6	5.5
Total Del/Veh (s)	30.0	26.2	3.8	40.0	24.6	27.9	20.7	25.5
Vehicles Entered	61	197	51	43	53	234	106	745
Vehicles Exited	60	194	52	45	54	231	110	746
Hourly Exit Rate	240	776	208	180	216	924	440	2984
Input Volume	246	835	196	187	221	982	405	3072
% of Volume	98	93	106	96	98	94	109	97

20: 3600 West & 2100 North EB Performance by movement Entire Run

Movement	EBL	EBT	EBR	NBT	NBR	SBL	SBT	All
Denied Delay (hr)	0.0	0.0	0.0	0.0	0.0	0.0	0.0	0.0
Denied Del/Veh (s)	0.0	0.0	0.0	0.2	0.1	0.0	0.0	0.0
Total Delay (hr)	2.0	5.8	0.2	2.4	1.8	8.8	2.7	23.7
Total Del/Veh (s)	29.2	24.4	4.0	46.7	30.2	32.9	21.6	27.4
Vehicles Entered	246	851	205	180	215	949	446	3092
Vehicles Exited	246	851	205	179	215	950	446	3092
Hourly Exit Rate	246	851	205	179	215	950	446	3092
Input Volume	250	850	200	190	225	1000	412	3127
% of Volume	98	100	103	94	96	95	108	99

22: 2100 North WB Performance by movement Interval #1 5:00

Movement	WBL	WBT	All
Denied Delay (hr)	0.0	0.1	0.1
Denied Del/Veh (s)	1.7	1.0	1.1
Total Delay (hr)	0.1	1.2	1.2
Total Del/Veh (s)	2.8	10.7	9.5
Vehicles Entered	66	363	429
Vehicles Exited	66	371	437
Hourly Exit Rate	264	1484	1748
Input Volume	270	1425	1695
% of Volume	98	104	103

22: 2100 North WB Performance by movement Interval #2 5:15

Movement	WBL	WBT	All
Denied Delay (hr)	0.0	0.1	0.1
Denied Del/Veh (s)	1.6	1.1	1.1
Total Delay (hr)	0.1	1.4	1.5
Total Del/Veh (s)	3.4	12.8	11.3
Vehicles Entered	71	387	458
Vehicles Exited	71	379	450
Hourly Exit Rate	284	1516	1800
Input Volume	289	1526	1815
% of Volume	98	99	99

22: 2100 North WB Performance by movement Interval #3 5:30

Movement	WBL	WBT	All
Denied Delay (hr)	0.0	0.1	0.1
Denied Del/Veh (s)	1.7	1.0	1.1
Total Delay (hr)	0.1	1.0	1.1
Total Del/Veh (s)	2.6	9.8	8.7
Vehicles Entered	70	354	424
Vehicles Exited	71	361	432
Hourly Exit Rate	284	1444	1728
Input Volume	270	1425	1695
% of Volume	105	101	102

22: 2100 North WB Performance by movement Interval #4 5:45

Movement	WBL	WBT	All
Denied Delay (hr)	0.0	0.1	0.1
Denied Del/Veh (s)	1.6	1.0	1.1
Total Delay (hr)	0.1	1.1	1.1
Total Del/Veh (s)	2.8	10.3	9.1
Vehicles Entered	70	355	425
Vehicles Exited	70	353	423
Hourly Exit Rate	280	1412	1692
Input Volume	270	1425	1695
% of Volume	104	99	100

22: 2100 North WB Performance by movement Entire Run

Movement	WBL	WBT	All
Denied Delay (hr)	0.1	0.4	0.5
Denied Del/Veh (s)	1.6	1.0	1.1
Total Delay (hr)	0.2	4.7	4.9
Total Del/Veh (s)	3.0	11.4	10.0
Vehicles Entered	277	1459	1736
Vehicles Exited	278	1464	1742
Hourly Exit Rate	278	1464	1742
Input Volume	275	1450	1725
% of Volume	101	101	101

23: 2100 North EB Performance by movement Interval #1 5:00

Movement	EBT	SEL	All
Denied Delay (hr)	0.0	0.0	0.0
Denied Del/Veh (s)	0.0	0.0	0.0
Total Delay (hr)	0.3	0.3	0.6
Total Del/Veh (s)	1.9	15.6	3.5
Vehicles Entered	503	66	569
Vehicles Exited	503	64	567
Hourly Exit Rate	2012	256	2268
Input Volume	2039	270	2309
% of Volume	99	95	98

23: 2100 North EB Performance by movement Interval #2 5:15

Movement	EBT	SEL	All
Denied Delay (hr)	0.0	0.0	0.0
Denied Del/Veh (s)	0.0	0.0	0.0
Total Delay (hr)	0.3	0.4	0.7
Total Del/Veh (s)	1.8	20.2	4.0
Vehicles Entered	528	71	599
Vehicles Exited	528	72	600
Hourly Exit Rate	2112	288	2400
Input Volume	2185	289	2474
% of Volume	97	100	97

23: 2100 North EB Performance by movement Interval #3 5:30

Movement	EBT	SEL	All
Denied Delay (hr)	0.0	0.0	0.0
Denied Del/Veh (s)	0.0	0.0	0.0
Total Delay (hr)	0.3	0.4	0.6
Total Del/Veh (s)	1.9	17.8	3.9
Vehicles Entered	506	71	577
Vehicles Exited	506	70	576
Hourly Exit Rate	2024	280	2304
Input Volume	2039	270	2309
% of Volume	99	104	100

23: 2100 North EB Performance by movement Interval #4 5:45

Movement	EBT	SEL	All
Denied Delay (hr)	0.0	0.0	0.0
Denied Del/Veh (s)	0.0	0.0	0.0
Total Delay (hr)	0.2	0.3	0.5
Total Del/Veh (s)	1.8	14.8	3.5
Vehicles Entered	480	70	550
Vehicles Exited	480	71	551
Hourly Exit Rate	1920	284	2204
Input Volume	2039	270	2309
% of Volume	94	105	95

23: 2100 North EB Performance by movement Entire Run

Movement	EBT	SEL	All
Denied Delay (hr)	0.0	0.0	0.0
Denied Del/Veh (s)	0.0	0.0	0.0
Total Delay (hr)	1.0	1.3	2.4
Total Del/Veh (s)	1.9	17.4	3.7
Vehicles Entered	2017	278	2295
Vehicles Exited	2017	276	2293
Hourly Exit Rate	2017	276	2293
Input Volume	2076	275	2350
% of Volume	97	100	98

24: 2100 North EB Performance by movement Interval #1 5:00

Movement	EBL	EBT	All
Denied Delay (hr)	0.0	0.1	0.1
Denied Del/Veh (s)	1.9	1.0	1.2
Total Delay (hr)	0.2	1.1	1.3
Total Del/Veh (s)	8.5	12.5	11.8
Vehicles Entered	72	308	380
Vehicles Exited	73	318	391
Hourly Exit Rate	292	1272	1564
Input Volume	295	1277	1572
% of Volume	99	100	99

24: 2100 North EB Performance by movement Interval #2 5:15

Movement	EBL	EBT	All
Denied Delay (hr)	0.0	0.1	0.1
Denied Del/Veh (s)	1.7	1.1	1.2
Total Delay (hr)	0.3	1.6	1.9
Total Del/Veh (s)	13.2	15.9	15.4
Vehicles Entered	76	351	427
Vehicles Exited	75	339	414
Hourly Exit Rate	300	1356	1656
Input Volume	316	1368	1684
% of Volume	95	99	98

24: 2100 North EB Performance by movement Interval #3 5:30

Movement	EBL	EBT	All
Denied Delay (hr)	0.0	0.1	0.1
Denied Del/Veh (s)	1.8	1.0	1.2
Total Delay (hr)	0.2	1.2	1.4
Total Del/Veh (s)	9.3	12.8	12.2
Vehicles Entered	69	323	392
Vehicles Exited	70	335	405
Hourly Exit Rate	280	1340	1620
Input Volume	295	1277	1572
% of Volume	95	105	103

24: 2100 North EB Performance by movement Interval #4 5:45

Movement	EBL	EBT	All
Denied Delay (hr)	0.0	0.1	0.1
Denied Del/Veh (s)	1.9	1.0	1.2
Total Delay (hr)	0.2	1.2	1.4
Total Del/Veh (s)	10.0	12.9	12.4
Vehicles Entered	70	318	388
Vehicles Exited	68	310	378
Hourly Exit Rate	272	1240	1512
Input Volume	295	1277	1572
% of Volume	92	97	96

24: 2100 North EB Performance by movement Entire Run

Movement	EBL	EBT	All
Denied Delay (hr)	0.1	0.4	0.5
Denied Del/Veh (s)	1.8	1.0	1.2
Total Delay (hr)	0.9	5.2	6.0
Total Del/Veh (s)	10.6	14.1	13.5
Vehicles Entered	288	1301	1589
Vehicles Exited	287	1302	1589
Hourly Exit Rate	287	1302	1589
Input Volume	300	1300	1600
% of Volume	96	100	99

25: 2100 North WB Performance by movement Interval #1 5:00

Movement	WBT	NWL	All
Denied Delay (hr)	0.0	0.0	0.0
Denied Del/Veh (s)	0.0	0.0	0.0
Total Delay (hr)	0.1	0.2	0.3
Total Del/Veh (s)	2.1	9.0	3.9
Vehicles Entered	204	73	277
Vehicles Exited	203	72	275
Hourly Exit Rate	812	288	1100
Input Volume	779	295	1074
% of Volume	104	98	102

25: 2100 North WB Performance by movement Interval #2 5:15

Movement	WBT	NWL	All
Denied Delay (hr)	0.0	0.0	0.0
Denied Del/Veh (s)	0.0	0.0	0.0
Total Delay (hr)	0.1	0.2	0.3
Total Del/Veh (s)	2.0	10.1	4.2
Vehicles Entered	206	75	281
Vehicles Exited	206	76	282
Hourly Exit Rate	824	304	1128
Input Volume	836	316	1152
% of Volume	99	96	98

25: 2100 North WB Performance by movement Interval #3 5:30

Movement	WBT	NWL	All
Denied Delay (hr)	0.0	0.0	0.0
Denied Del/Veh (s)	0.0	0.0	0.0
Total Delay (hr)	0.1	0.2	0.3
Total Del/Veh (s)	2.1	8.8	3.9
Vehicles Entered	199	70	269
Vehicles Exited	199	70	269
Hourly Exit Rate	796	280	1076
Input Volume	779	295	1074
% of Volume	102	95	100

25: 2100 North WB Performance by movement Interval #4 5:45

Movement	WBT	NWL	All
Denied Delay (hr)	0.0	0.0	0.0
Denied Del/Veh (s)	0.0	0.0	0.0
Total Delay (hr)	0.1	0.2	0.3
Total Del/Veh (s)	1.9	8.2	3.6
Vehicles Entered	186	68	254
Vehicles Exited	186	68	254
Hourly Exit Rate	744	272	1016
Input Volume	779	295	1074
% of Volume	96	92	95

25: 2100 North WB Performance by movement Entire Run

Movement	WBT	NWL	All
Denied Delay (hr)	0.0	0.0	0.0
Denied Del/Veh (s)	0.0	0.0	0.0
Total Delay (hr)	0.5	0.7	1.2
Total Del/Veh (s)	2.0	9.2	3.9
Vehicles Entered	795	287	1082
Vehicles Exited	795	287	1082
Hourly Exit Rate	795	287	1082
Input Volume	793	300	1094
% of Volume	100	96	99

31: 400 East & Crossroads Blvd Performance by movement Interval #1 5:00

Movement	EBL	EBT	EBR	WBL	WBT	WBR	NBL	NBT	NBR	SBL	SBT	SBR
Denied Delay (hr)	0.0	0.0	0.0	0.0	0.0	0.0	0.0	0.0	0.0	0.0	0.0	0.0
Denied Del/Veh (s)	0.1	0.0	0.1	2.1	0.3	1.8	3.6	0.2	3.9	4.1	0.4	4.0
Total Delay (hr)	0.0	0.2	0.0	0.2	0.5	0.0	0.1	0.0	0.0	0.0	0.1	0.0
Total Del/Veh (s)	13.7	4.6	1.9	24.1	9.4	1.9	44.9	22.0	6.4	40.0	41.5	6.8
Vehicles Entered	11	175	9	22	203	8	6	2	11	4	10	22
Vehicles Exited	12	171	9	20	199	8	6	2	11	4	11	22
Hourly Exit Rate	48	684	36	80	796	32	24	8	44	16	44	88
Input Volume	44	717	34	84	845	34	25	10	44	25	39	88
% of Volume	109	95	106	95	94	94	96	80	100	64	113	100

31: 400 East & Crossroads Blvd Performance by movement Interval #1 5:00

Movement	All
Denied Delay (hr)	0.1
Denied Del/Veh (s)	0.6
Total Delay (hr)	1.3
Total Del/Veh (s)	9.5
Vehicles Entered	483
Vehicles Exited	475
Hourly Exit Rate	1900
Input Volume	1989
% of Volume	96

31: 400 East & Crossroads Blvd Performance by movement Interval #2 5:15

Movement	EBL	EBT	EBR	WBL	WBT	WBR	NBL	NBT	NBR	SBL	SBT	SBR
Denied Delay (hr)	0.0	0.0	0.0	0.0	0.0	0.0	0.0	0.0	0.0	0.0	0.0	0.0
Denied Del/Veh (s)	0.1	0.0	0.1	1.9	0.2	1.8	3.9	0.6	3.9	3.9	0.5	3.9
Total Delay (hr)	0.1	0.3	0.0	0.2	0.6	0.0	0.1	0.0	0.0	0.1	0.1	0.1
Total Del/Veh (s)	16.7	4.8	2.8	21.7	9.1	2.4	37.5	27.3	6.8	37.9	39.9	7.3
Vehicles Entered	12	188	10	22	232	10	7	2	12	6	12	25
Vehicles Exited	12	191	10	22	228	10	7	3	12	6	12	26
Hourly Exit Rate	48	764	40	88	912	40	28	12	48	24	48	104
Input Volume	47	768	37	89	905	37	26	11	47	26	42	95
% of Volume	102	99	108	99	101	108	108	109	102	92	114	109

31: 400 East & Crossroads Blvd Performance by movement Interval #2 5:15

Movement	All
Denied Delay (hr)	0.1
Denied Del/Veh (s)	0.6
Total Delay (hr)	1.5
Total Del/Veh (s)	9.4
Vehicles Entered	538
Vehicles Exited	539
Hourly Exit Rate	2156
Input Volume	2130
% of Volume	101

31: 400 East & Crossroads Blvd Performance by movement Interval #3 5:30

Movement	EBL	EBT	EBR	WBL	WBT	WBR	NBL	NBT	NBR	SBL	SBT	SBR
Denied Delay (hr)	0.0	0.0	0.0	0.0	0.0	0.0	0.0	0.0	0.0	0.0	0.0	0.0
Denied Del/Veh (s)	0.0	0.0	0.1	1.9	0.2	2.1	3.6	0.2	3.9	3.9	0.4	3.8
Total Delay (hr)	0.1	0.2	0.0	0.2	0.5	0.0	0.1	0.0	0.0	0.1	0.1	0.0
Total Del/Veh (s)	19.2	4.6	2.3	24.3	8.9	2.1	51.0	31.9	7.0	33.8	44.2	6.0
Vehicles Entered	11	172	7	21	202	9	6	3	12	6	9	21
Vehicles Exited	11	178	8	23	209	9	5	2	11	5	9	20
Hourly Exit Rate	44	712	32	92	836	36	20	8	44	20	36	80
Input Volume	44	717	34	84	845	34	25	10	44	25	39	88
% of Volume	100	99	94	110	99	106	80	80	100	80	92	91

31: 400 East & Crossroads Blvd Performance by movement Interval #3 5:30

Movement	All
Denied Delay (hr)	0.1
Denied Del/Veh (s)	0.6
Total Delay (hr)	1.3
Total Del/Veh (s)	9.5
Vehicles Entered	479
Vehicles Exited	490
Hourly Exit Rate	1960
Input Volume	1989
% of Volume	99

31: 400 East & Crossroads Blvd Performance by movement Interval #4 5:45

Movement	EBL	EBT	EBR	WBL	WBT	WBR	NBL	NBT	NBR	SBL	SBT	SBR
Denied Delay (hr)	0.0	0.0	0.0	0.0	0.0	0.0	0.0	0.0	0.0	0.0	0.0	0.0
Denied Del/Veh (s)	0.1	0.0	0.0	2.1	0.2	2.0	4.1	0.3	4.1	4.2	0.4	3.9
Total Delay (hr)	0.1	0.2	0.0	0.1	0.6	0.0	0.1	0.0	0.0	0.1	0.1	0.0
Total Del/Veh (s)	16.9	4.6	2.2	23.8	10.0	2.8	32.4	28.2	6.6	36.2	34.5	6.7
Vehicles Entered	13	175	8	22	209	8	6	2	10	6	9	22
Vehicles Exited	13	175	8	22	209	8	6	3	11	6	9	21
Hourly Exit Rate	52	700	32	88	836	32	24	12	44	24	36	84
Input Volume	44	717	34	84	845	34	25	10	44	25	39	88
% of Volume	118	98	94	105	99	94	96	120	100	96	92	95

31: 400 East & Crossroads Blvd Performance by movement Interval #4 5:45

Movement	All
Denied Delay (hr)	0.1
Denied Del/Veh (s)	0.6
Total Delay (hr)	1.4
Total Del/Veh (s)	9.7
Vehicles Entered	490
Vehicles Exited	491
Hourly Exit Rate	1964
Input Volume	1989
% of Volume	99

31: 400 East & Crossroads Blvd Performance by movement Entire Run

Movement	EBL	EBT	EBR	WBL	WBT	WBR	NBL	NBT	NBR	SBL	SBT	SBR
Denied Delay (hr)	0.0	0.0	0.0	0.0	0.1	0.0	0.0	0.0	0.0	0.0	0.0	0.1
Denied Del/Veh (s)	0.1	0.0	0.1	2.0	0.2	1.9	3.9	0.3	4.0	3.8	0.4	3.9
Total Delay (hr)	0.2	1.0	0.0	0.6	2.3	0.0	0.3	0.1	0.1	0.2	0.5	0.2
Total Del/Veh (s)	16.9	4.8	2.4	25.1	9.7	2.3	44.4	32.8	7.0	38.3	40.9	6.8
Vehicles Entered	47	710	35	87	846	35	24	10	45	23	40	89
Vehicles Exited	48	715	35	87	846	36	24	10	45	22	40	89
Hourly Exit Rate	48	715	35	87	846	36	24	10	45	22	40	89
Input Volume	45	730	35	85	860	35	25	10	45	25	40	90
% of Volume	107	98	101	102	98	104	95	98	101	87	101	99

31: 400 East & Crossroads Blvd Performance by movement Entire Run

Movement	All
Denied Delay (hr)	0.3
Denied Del/Veh (s)	0.6
Total Delay (hr)	5.5
Total Del/Veh (s)	9.8
Vehicles Entered	1991
Vehicles Exited	1997
Hourly Exit Rate	1997
Input Volume	2024
% of Volume	99

34: Crossroads Blvd Performance by movement Interval #1 5:00

Movement	EBT	EBR	WBT	All
Denied Delay (hr)	0.0	0.0	0.0	0.0
Denied Del/Veh (s)	0.0	0.0	0.0	0.0
Total Delay (hr)	0.1	0.0	0.2	0.3
Total Del/Veh (s)	2.7	2.0	2.8	2.7
Vehicles Entered	194	4	227	425
Vehicles Exited	194	4	232	430
Hourly Exit Rate	776	16	928	1720
Input Volume	786	20	959	1765
% of Volume	99	80	97	97

34: Crossroads Blvd Performance by movement Interval #2 5:15

Movement	EBT	EBR	WBT	All
Denied Delay (hr)	0.0	0.0	0.0	0.0
Denied Del/Veh (s)	0.0	0.0	0.0	0.0
Total Delay (hr)	0.2	0.0	0.2	0.4
Total Del/Veh (s)	2.8	1.5	3.0	2.9
Vehicles Entered	211	5	261	477
Vehicles Exited	206	5	266	477
Hourly Exit Rate	824	20	1064	1908
Input Volume	842	21	1026	1889
% of Volume	98	95	104	101

34: Crossroads Blvd Performance by movement Interval #3 5:30

Movement	EBT	EBR	WBT	All
Denied Delay (hr)	0.0	0.0	0.0	0.0
Denied Del/Veh (s)	0.0	0.0	0.0	0.0
Total Delay (hr)	0.1	0.0	0.2	0.3
Total Del/Veh (s)	2.4	1.4	2.9	2.6
Vehicles Entered	189	4	235	428
Vehicles Exited	188	5	231	424
Hourly Exit Rate	752	20	924	1696
Input Volume	786	20	959	1765
% of Volume	96	100	96	96

34: Crossroads Blvd Performance by movement Interval #4 5:45

Movement	EBT	EBR	WBT	All
Denied Delay (hr)	0.0	0.0	0.0	0.0
Denied Del/Veh (s)	0.0	0.0	0.0	0.0
Total Delay (hr)	0.1	0.0	0.2	0.3
Total Del/Veh (s)	2.4	1.3	2.9	2.7
Vehicles Entered	184	5	236	425
Vehicles Exited	193	5	235	433
Hourly Exit Rate	772	20	940	1732
Input Volume	786	20	959	1765
% of Volume	98	100	98	98

34: Crossroads Blvd Performance by movement Entire Run

Movement	EBT	EBR	WBT	All
Denied Delay (hr)	0.0	0.0	0.0	0.0
Denied Del/Veh (s)	0.0	0.0	0.0	0.0
Total Delay (hr)	0.6	0.0	0.8	1.4
Total Del/Veh (s)	2.6	1.5	3.0	2.8
Vehicles Entered	778	19	959	1756
Vehicles Exited	781	19	963	1763
Hourly Exit Rate	781	19	963	1763
Input Volume	800	20	976	1796
% of Volume	98	94	99	98

38: Performance by movement Interval #1 5:00

Movement	EBL	EBT	EBR	WBL	WBT	WBR	NBL	NBT	NBR	SBL	SBT	SBR
Denied Delay (hr)	0.6	0.1	0.5	0.0	0.0	0.0	0.0	0.0	0.0	0.0	0.0	0.0
Denied Del/Veh (s)	33.8	23.6	32.5	3.8	0.8	3.7	0.0	0.0	0.0	1.6	0.4	1.6
Total Delay (hr)	8.1	0.3	0.7	0.4	0.3	0.1	1.0	0.3	0.0	0.2	1.8	0.2
Total Del/Veh (s)	437.6	62.9	44.6	66.2	58.5	7.2	40.9	7.9	4.3	22.8	18.7	8.6
Vehicles Entered	50	17	49	20	17	37	87	128	23	36	338	91
Vehicles Exited	23	18	50	21	19	37	86	128	22	36	337	90
Hourly Exit Rate	92	72	200	84	76	148	344	512	88	144	1348	360
Input Volume	241	74	236	93	74	147	349	532	93	147	1361	373
% of Volume	38	97	85	90	103	101	99	96	95	98	99	97

38: Performance by movement Interval #1 5:00

Movement	All
Denied Delay (hr)	1.4
Denied Del/Veh (s)	5.4
Total Delay (hr)	13.7
Total Del/Veh (s)	51.7
Vehicles Entered	893
Vehicles Exited	867
Hourly Exit Rate	3468
Input Volume	3720
% of Volume	93

38: Performance by movement Interval #2 5:15

Movement	EBL	EBT	EBR	WBL	WBT	WBR	NBL	NBT	NBR	SBL	SBT	SBR
Denied Delay (hr)	7.7	2.3	7.8	0.0	0.0	0.0	0.0	0.0	0.0	0.0	0.0	0.0
Denied Del/Veh (s)	385.5	341.5	379.9	3.5	0.9	3.8	0.0	0.0	0.0	1.6	0.4	1.5
Total Delay (hr)	10.8	0.4	0.8	0.5	0.3	0.1	1.6	0.3	0.0	0.3	2.1	0.3
Total Del/Veh (s)	599.2	165.1	114.4	68.2	60.6	7.7	56.7	8.6	5.1	26.5	20.2	9.7
Vehicles Entered	21	7	20	26	19	38	95	134	25	38	366	102
Vehicles Exited	21	6	21	26	18	38	92	132	25	36	350	101
Hourly Exit Rate	84	24	84	104	72	152	368	528	100	144	1400	404
Input Volume	258	79	253	100	79	158	374	569	100	158	1458	400
% of Volume	33	30	33	104	91	96	98	93	100	91	96	101

38: Performance by movement Interval #2 5:15

Movement	All
Denied Delay (hr)	18.0
Denied Del/Veh (s)	63.9
Total Delay (hr)	17.6
Total Del/Veh (s)	65.2
Vehicles Entered	891
Vehicles Exited	866
Hourly Exit Rate	3464
Input Volume	3986
% of Volume	87

38: Performance by movement Interval #3 5:30

Movement	EBL	EBT	EBR	WBL	WBT	WBR	NBL	NBT	NBR	SBL	SBT	SBR
Denied Delay (hr)	17.3	5.7	19.2	0.0	0.0	0.0	0.0	0.0	0.0	0.0	0.0	0.0
Denied Del/Veh (s)	561.9	582.1	565.4	3.7	0.8	3.7	0.0	0.0	0.0	1.6	0.4	1.6
Total Delay (hr)	10.8	0.4	1.0	0.5	0.4	0.1	1.5	0.3	0.0	0.3	1.8	0.3
Total Del/Veh (s)	587.9	163.0	129.8	72.4	68.8	8.0	57.2	8.1	4.8	24.8	18.0	8.7
Vehicles Entered	22	7	24	24	20	38	86	138	23	41	336	99
Vehicles Exited	22	7	23	25	21	38	90	137	22	41	336	100
Hourly Exit Rate	88	28	92	100	84	152	360	548	88	164	1344	400
Input Volume	241	74	236	93	74	147	349	532	93	147	1361	373
% of Volume	37	38	39	108	114	103	103	103	95	112	99	107

38: Performance by movement Interval #3 5:30

Movement	All
Denied Delay (hr)	42.3
Denied Del/Veh (s)	142.0
Total Delay (hr)	17.4
Total Del/Veh (s)	65.1
Vehicles Entered	858
Vehicles Exited	862
Hourly Exit Rate	3448
Input Volume	3720
% of Volume	93

38: Performance by movement Interval #4 5:45

Movement	EBL	EBT	EBR	WBL	WBT	WBR	NBL	NBT	NBR	SBL	SBT	SBR
Denied Delay (hr)	26.9	8.6	28.7	0.0	0.0	0.0	0.0	0.0	0.0	0.0	0.0	0.0
Denied Del/Veh (s)	659.9	633.7	676.0	3.6	0.9	3.6	0.0	0.0	0.0	1.6	0.4	1.6
Total Delay (hr)	10.9	0.4	1.0	0.5	0.4	0.1	1.1	0.3	0.0	0.3	1.9	0.2
Total Del/Veh (s)	610.5	175.3	138.5	78.7	68.3	7.6	45.2	7.9	5.7	22.1	17.8	7.9
Vehicles Entered	20	8	20	22	18	39	85	130	23	38	350	90
Vehicles Exited	22	8	23	20	16	39	79	128	23	40	358	91
Hourly Exit Rate	88	32	92	80	64	156	316	512	92	160	1432	364
Input Volume	241	74	236	93	74	147	349	532	93	147	1361	373
% of Volume	37	43	39	86	86	106	91	96	99	109	105	98

38: Performance by movement Interval #4 5:45

Movement	All
Denied Delay (hr)	64.5
Denied Del/Veh (s)	202.9
Total Delay (hr)	17.0
Total Del/Veh (s)	64.9
Vehicles Entered	843
Vehicles Exited	847
Hourly Exit Rate	3388
Input Volume	3720
% of Volume	91

38: Performance by movement Entire Run

Movement	EBL	EBT	EBR	WBL	WBT	WBR	NBL	NBT	NBR	SBL	SBT	SBR
Denied Delay (hr)	52.5	16.7	56.2	0.1	0.0	0.2	0.0	0.0	0.0	0.1	0.2	0.2
Denied Del/Veh (s)	784.9	760.7	822.9	3.7	0.8	3.7	0.0	0.0	0.0	1.6	0.4	1.6
Total Delay (hr)	40.6	1.5	3.5	2.0	1.4	0.3	5.3	1.2	0.1	1.1	7.7	1.0
Total Del/Veh (s)	1115.5	134.9	105.5	75.7	66.5	7.8	52.9	8.3	5.1	25.5	19.7	9.2
Vehicles Entered	114	38	113	91	74	152	353	530	93	154	1390	383
Vehicles Exited	89	40	117	92	74	152	348	526	93	153	1381	383
Hourly Exit Rate	89	40	117	92	74	152	348	526	93	153	1381	383
Input Volume	245	75	240	95	75	150	355	541	95	150	1385	380
% of Volume	36	53	49	97	98	102	98	97	98	102	100	101

38: Performance by movement Entire Run

Movement	All
Denied Delay (hr)	126.1
Denied Del/Veh (s)	119.9
Total Delay (hr)	65.7
Total Del/Veh (s)	66.7
Vehicles Entered	3485
Vehicles Exited	3448
Hourly Exit Rate	3448
Input Volume	3786
% of Volume	91

Total Network Performance By Interval

Interval Start	5:00	5:15	5:30	5:45	All
Denied Delay (hr)	2.1	18.7	43.0	65.1	128.9
Denied Del/Veh (s)	2.6	21.9	52.7	77.6	40.5
Total Delay (hr)	46.9	54.8	49.9	48.6	200.1
Total Del/Veh (s)	52.6	58.0	55.7	55.0	62.1
Vehicles Entered	2774	2949	2720	2719	11169
Vehicles Exited	2765	2894	2770	2704	11132
Hourly Exit Rate	11060	11576	11080	10816	11132
Input Volume	49420	52951	49420	49420	50303
% of Volume	22	22	22	22	22

Intersection: 2: Redwood Road & Crossroads Blvd, Interval #1

Movement	EB	EB	EB	EB	EB	EB	WB	WB	WB	WB	WB	WB
Directions Served	L	L	T	T	T	R	L	L	T	T	T	R
Maximum Queue (ft)	85	86	157	144	90	27	136	159	156	151	145	62
Average Queue (ft)	44	54	107	86	24	9	88	111	95	98	88	30
95th Queue (ft)	90	97	169	154	86	28	155	178	163	158	163	63
Link Distance (ft)			1586	1586					901	901		
Upstream Blk Time (%)												
Queuing Penalty (veh)												
Storage Bay Dist (ft)	700	700			500	500	220	220			340	340
Storage Blk Time (%)								0	0			
Queuing Penalty (veh)								0	1			

Intersection: 2: Redwood Road & Crossroads Blvd, Interval #1

Movement	NB	NB	NB	NB	NB	SB	SB	SB	SB	SB
Directions Served	L	L	T	T	R	L	L	T	T	R
Maximum Queue (ft)	159	176	248	200	77	115	127	254	258	53
Average Queue (ft)	92	129	165	122	41	64	82	137	147	29
95th Queue (ft)	174	186	261	213	77	122	139	249	272	59
Link Distance (ft)			1242	1242				1013	1013	1013
Upstream Blk Time (%)										
Queuing Penalty (veh)										
Storage Bay Dist (ft)	200	200			300	450	450			
Storage Blk Time (%)	0	0	4							
Queuing Penalty (veh)	0	1	9							

Intersection: 2: Redwood Road & Crossroads Blvd, Interval #2

Movement	EB	EB	EB	EB	EB	EB	WB	WB	WB	WB	WB	WB
Directions Served	L	L	T	T	T	R	L	L	T	T	T	R
Maximum Queue (ft)	85	94	160	152	112	30	164	178	145	156	162	58
Average Queue (ft)	50	53	117	101	30	10	104	126	93	96	103	30
95th Queue (ft)	94	97	173	163	105	32	182	194	152	162	176	60
Link Distance (ft)			1586	1586					901	901		
Upstream Blk Time (%)												
Queuing Penalty (veh)												
Storage Bay Dist (ft)	700	700			500	500	220	220			340	340
Storage Blk Time (%)							0	1				
Queuing Penalty (veh)							0	1				

Intersection: 2: Redwood Road & Crossroads Blvd, Interval #2

Movement	NB	NB	NB	NB	NB	SB	SB	SB	SB	SB
Directions Served	L	L	T	T	R	L	L	T	T	R
Maximum Queue (ft)	161	188	246	206	80	116	133	242	244	58
Average Queue (ft)	92	140	168	140	46	71	86	150	159	31
95th Queue (ft)	179	204	255	224	87	121	141	261	265	65
Link Distance (ft)			1242	1242				1013	1013	1013
Upstream Blk Time (%)										
Queuing Penalty (veh)										
Storage Bay Dist (ft)	200	200			300	450	450			
Storage Blk Time (%)	0	1	4							
Queuing Penalty (veh)	1	4	9							

Intersection: 2: Redwood Road & Crossroads Blvd, Interval #3

Movement	EB	EB	EB	EB	EB	EB	WB	WB	WB	WB	WB	WB
Directions Served	L	L	T	T	T	R	L	L	T	T	T	R
Maximum Queue (ft)	77	86	153	137	108	33	169	198	125	135	135	67
Average Queue (ft)	34	45	112	92	31	11	115	136	89	97	91	32
95th Queue (ft)	75	85	159	149	101	35	194	208	133	142	138	65
Link Distance (ft)			1586	1586					901	901		
Upstream Blk Time (%)												
Queuing Penalty (veh)												
Storage Bay Dist (ft)	700	700			500	500	220	220			340	340
Storage Blk Time (%)							0	0				
Queuing Penalty (veh)							0	0				

Intersection: 2: Redwood Road & Crossroads Blvd, Interval #3

Movement	NB	NB	NB	NB	NB	SB	SB	SB	SB	SB
Directions Served	L	L	T	T	R	L	L	T	T	R
Maximum Queue (ft)	153	172	233	192	65	97	115	202	207	52
Average Queue (ft)	75	120	164	125	34	57	76	111	125	25
95th Queue (ft)	161	189	247	213	65	102	118	207	219	53
Link Distance (ft)			1242	1242				1013	1013	1013
Upstream Blk Time (%)										
Queuing Penalty (veh)										
Storage Bay Dist (ft)	200	200			300	450	450			
Storage Blk Time (%)		0	3							
Queuing Penalty (veh)		1	8							

Intersection: 2: Redwood Road & Crossroads Blvd, Interval #4

Movement	EB	EB	EB	EB	EB	EB	WB	WB	WB	WB	WB	WB
Directions Served	L	L	T	T	T	R	L	L	T	T	T	R
Maximum Queue (ft)	82	88	156	148	88	26	168	177	138	143	156	58
Average Queue (ft)	43	53	117	95	24	10	107	125	91	94	93	29
95th Queue (ft)	83	92	168	165	86	28	182	193	145	149	165	58
Link Distance (ft)			1586	1586					901	901		
Upstream Blk Time (%)												
Queuing Penalty (veh)												
Storage Bay Dist (ft)	700	700			500	500	220	220			340	340
Storage Blk Time (%)							0	0	0			
Queuing Penalty (veh)							0	0	0			

Intersection: 2: Redwood Road & Crossroads Blvd, Interval #4

Movement	NB	NB	NB	NB	NB	SB	SB	SB	SB	SB
Directions Served	L	L	T	T	R	L	L	T	T	R
Maximum Queue (ft)	132	163	237	206	77	111	127	236	232	64
Average Queue (ft)	71	116	157	121	38	57	74	131	138	29
95th Queue (ft)	158	177	245	210	76	120	135	236	241	64
Link Distance (ft)			1242	1242				1013	1013	1013
Upstream Blk Time (%)										
Queuing Penalty (veh)										
Storage Bay Dist (ft)	200	200			300	450	450			
Storage Blk Time (%)		0	3	0						
Queuing Penalty (veh)		0	7	0						

Intersection: 2: Redwood Road & Crossroads Blvd, All Intervals

Movement	EB	EB	EB	EB	EB	EB	WB	WB	WB	WB	WB	WB
Directions Served	L	L	T	T	T	R	L	L	T	T	T	R
Maximum Queue (ft)	112	112	175	167	141	46	193	212	182	180	187	82
Average Queue (ft)	43	51	113	93	27	10	103	124	92	96	94	30
95th Queue (ft)	86	93	168	159	95	31	180	195	149	153	162	62
Link Distance (ft)			1586	1586					901	901		
Upstream Blk Time (%)												
Queuing Penalty (veh)												
Storage Bay Dist (ft)	700	700			500	500	220	220			340	340
Storage Blk Time (%)							0	0	0			
Queuing Penalty (veh)							0	0	0			

Intersection: 2: Redwood Road & Crossroads Blvd, All Intervals

Movement	NB	NB	NB	NB	NB	SB	SB	SB	SB	SB
Directions Served	L	L	T	T	R	L	L	T	T	R
Maximum Queue (ft)	179	197	283	237	96	142	158	290	292	74
Average Queue (ft)	82	126	164	127	40	62	80	132	143	28
95th Queue (ft)	169	191	252	216	77	117	134	241	252	61
Link Distance (ft)			1242	1242				1013	1013	1013
Upstream Blk Time (%)										
Queuing Penalty (veh)										
Storage Bay Dist (ft)	200	200			300	450	450			
Storage Blk Time (%)	0	0	4	0						
Queuing Penalty (veh)	0	1	8	0						

Intersection: 3: Redwood Road & Commerce Drive, Interval #1

Movement	EB	EB	EB	WB	WB	WB	NB	NB	NB	NB	SB	SB
Directions Served	L	T	R	L	T	R	L	T	T	R	L	T
Maximum Queue (ft)	198	227	86	66	64	64	117	196	170	30	151	276
Average Queue (ft)	135	88	48	34	28	31	70	111	94	9	85	147
95th Queue (ft)	216	271	100	74	69	61	125	202	174	30	156	279
Link Distance (ft)		1102			583			1013	1013			509
Upstream Blk Time (%)												
Queuing Penalty (veh)												
Storage Bay Dist (ft)	110		150	105		105	250			250	300	
Storage Blk Time (%)	27	2	0	0	0			1	0			1
Queuing Penalty (veh)	48	6	0	0	0			1	0			1

Intersection: 3: Redwood Road & Commerce Drive, Interval #1

Movement	SB	SB
Directions Served	T	R
Maximum Queue (ft)	288	207
Average Queue (ft)	157	63
95th Queue (ft)	293	198
Link Distance (ft)	509	
Upstream Blk Time (%)		
Queuing Penalty (veh)		
Storage Bay Dist (ft)		150
Storage Blk Time (%)	8	
Queuing Penalty (veh)	26	

Intersection: 3: Redwood Road & Commerce Drive, Interval #2

Movement	EB	EB	EB	WB	WB	WB	NB	NB	NB	NB	SB	SB
Directions Served	L	T	R	L	T	R	L	T	T	R	L	T
Maximum Queue (ft)	196	224	122	70	72	66	122	217	211	25	148	278
Average Queue (ft)	142	98	53	35	31	37	70	121	103	9	89	128
95th Queue (ft)	221	284	121	82	84	70	128	231	218	27	153	270
Link Distance (ft)		1102			583			1013	1013			509
Upstream Blk Time (%)												
Queuing Penalty (veh)												
Storage Bay Dist (ft)	110		150	105		105	250			250	300	
Storage Blk Time (%)	35	1		1	0	0		1	0			1
Queuing Penalty (veh)	67	3		1	1	0		1	0			1

Intersection: 3: Redwood Road & Commerce Drive, Interval #2

Movement	SB	SB
Directions Served	T	R
Maximum Queue (ft)	302	199
Average Queue (ft)	131	57
95th Queue (ft)	275	178
Link Distance (ft)	509	
Upstream Blk Time (%)	0	
Queuing Penalty (veh)	0	
Storage Bay Dist (ft)		150
Storage Blk Time (%)	6	
Queuing Penalty (veh)	21	

Intersection: 3: Redwood Road & Commerce Drive, Interval #3

Movement	EB	EB	EB	WB	WB	WB	NB	NB	NB	NB	SB	SB
Directions Served	L	T	R	L	T	R	L	T	T	R	L	T
Maximum Queue (ft)	199	249	166	66	69	64	135	170	156	12	132	284
Average Queue (ft)	149	101	65	27	28	35	75	96	88	4	75	134
95th Queue (ft)	226	268	160	73	74	67	151	176	166	13	143	294
Link Distance (ft)		1102			583			1013	1013			509
Upstream Blk Time (%)												
Queuing Penalty (veh)												
Storage Bay Dist (ft)	110		150	105		105	250			250	300	
Storage Blk Time (%)	34	1		0	0	0	0					1
Queuing Penalty (veh)	60	3		0	0	0	0					1

Intersection: 3: Redwood Road & Commerce Drive, Interval #3

Movement	SB	SB
Directions Served	T	R
Maximum Queue (ft)	323	200
Average Queue (ft)	145	64
95th Queue (ft)	348	198
Link Distance (ft)	509	
Upstream Blk Time (%)		
Queuing Penalty (veh)		
Storage Bay Dist (ft)		150
Storage Blk Time (%)	6	0
Queuing Penalty (veh)	18	1

Intersection: 3: Redwood Road & Commerce Drive, Interval #4

Movement	EB	EB	EB	WB	WB	WB	NB	NB	NB	NB	SB	SB
Directions Served	L	T	R	L	T	R	L	T	T	R	L	T
Maximum Queue (ft)	204	206	88	63	67	54	97	181	154	30	140	288
Average Queue (ft)	137	70	50	35	29	29	56	91	81	9	80	138
95th Queue (ft)	217	192	103	68	71	52	103	171	161	33	150	297
Link Distance (ft)		1102			583			1013	1013			509
Upstream Blk Time (%)												
Queuing Penalty (veh)												
Storage Bay Dist (ft)	110		150	105		105	250			250	300	
Storage Blk Time (%)	32	0	0	0	0			0	0			1
Queuing Penalty (veh)	57	0	1	0	0			0	0			1

Intersection: 3: Redwood Road & Commerce Drive, Interval #4

Movement	SB	SB
Directions Served	T	R
Maximum Queue (ft)	305	160
Average Queue (ft)	140	45
95th Queue (ft)	306	154
Link Distance (ft)	509	
Upstream Blk Time (%)	0	
Queuing Penalty (veh)	0	
Storage Bay Dist (ft)		150
Storage Blk Time (%)	5	0
Queuing Penalty (veh)	17	0

Intersection: 3: Redwood Road & Commerce Drive, All Intervals

Movement	EB	EB	EB	WB	WB	WB	NB	NB	NB	NB	SB	SB
Directions Served	L	T	R	L	T	R	L	T	T	R	L	T
Maximum Queue (ft)	209	364	201	90	99	80	156	249	239	48	188	366
Average Queue (ft)	141	89	54	33	29	33	68	105	91	8	83	137
95th Queue (ft)	221	257	124	75	75	63	129	198	182	27	151	286
Link Distance (ft)		1102			583			1013	1013			509
Upstream Blk Time (%)												
Queuing Penalty (veh)												
Storage Bay Dist (ft)	110		150	105		105	250			250	300	
Storage Blk Time (%)	32	1	0	0	0	0	0	0	0			1
Queuing Penalty (veh)	58	3	0	0	0	0	0	0	0			1

Intersection: 3: Redwood Road & Commerce Drive, All Intervals

Movement	SB	SB
Directions Served	T	R
Maximum Queue (ft)	392	250
Average Queue (ft)	143	57
95th Queue (ft)	308	183
Link Distance (ft)	509	
Upstream Blk Time (%)	0	
Queuing Penalty (veh)	0	
Storage Bay Dist (ft)		150
Storage Blk Time (%)	6	0
Queuing Penalty (veh)	21	0

Intersection: 11: Redwood Road & Aspen Hills Blvd, Interval #1

Movement	EB	NB	SB
Directions Served	LR	L	R
Maximum Queue (ft)	49	55	9
Average Queue (ft)	24	27	1
95th Queue (ft)	58	59	10
Link Distance (ft)	1436		
Upstream Blk Time (%)			
Queuing Penalty (veh)			
Storage Bay Dist (ft)		100	200
Storage Blk Time (%)			
Queuing Penalty (veh)			

Intersection: 11: Redwood Road & Aspen Hills Blvd, Interval #2

Movement	EB	NB
Directions Served	LR	L
Maximum Queue (ft)	46	63
Average Queue (ft)	22	25
95th Queue (ft)	50	62
Link Distance (ft)	1436	
Upstream Blk Time (%)		
Queuing Penalty (veh)		
Storage Bay Dist (ft)		100
Storage Blk Time (%)		0
Queuing Penalty (veh)		0

Intersection: 11: Redwood Road & Aspen Hills Blvd, Interval #3

Movement	EB	NB	SB
Directions Served	LR	L	R
Maximum Queue (ft)	52	48	2
Average Queue (ft)	24	21	0
95th Queue (ft)	60	55	5
Link Distance (ft)	1436		
Upstream Blk Time (%)			
Queuing Penalty (veh)			
Storage Bay Dist (ft)		100	200
Storage Blk Time (%)		0	
Queuing Penalty (veh)		0	

Intersection: 11: Redwood Road & Aspen Hills Blvd, Interval #4

Movement	EB	NB
Directions Served	LR	L
Maximum Queue (ft)	52	58
Average Queue (ft)	24	26
95th Queue (ft)	52	60
Link Distance (ft)	1436	
Upstream Blk Time (%)		
Queuing Penalty (veh)		
Storage Bay Dist (ft)		100
Storage Blk Time (%)		
Queuing Penalty (veh)		

Intersection: 11: Redwood Road & Aspen Hills Blvd, All Intervals

Movement	EB	NB	SB
Directions Served	LR	L	R
Maximum Queue (ft)	76	76	9
Average Queue (ft)	23	25	0
95th Queue (ft)	55	59	5
Link Distance (ft)	1436		
Upstream Blk Time (%)			
Queuing Penalty (veh)			
Storage Bay Dist (ft)		100	200
Storage Blk Time (%)		0	
Queuing Penalty (veh)		0	

Intersection: 13: Redwood Road & Sergeant Court Drive, Interval #1

Movement	EB	EB	NB
Directions Served	L	R	L
Maximum Queue (ft)	21	40	36
Average Queue (ft)	4	19	13
95th Queue (ft)	20	46	38
Link Distance (ft)		818	
Upstream Blk Time (%)			
Queuing Penalty (veh)			
Storage Bay Dist (ft)	25		50
Storage Blk Time (%)	4	15	0
Queuing Penalty (veh)	1	1	2

Intersection: 13: Redwood Road & Sergeant Court Drive, Interval #2

Movement	EB	EB	NB	NB	SB
Directions Served	L	R	L	T	T
Maximum Queue (ft)	19	47	42	9	3
Average Queue (ft)	4	18	15	1	0
95th Queue (ft)	22	49	44	19	0
Link Distance (ft)		818		509	232
Upstream Blk Time (%)					
Queuing Penalty (veh)					
Storage Bay Dist (ft)	25		50		
Storage Blk Time (%)	5	13	3		
Queuing Penalty (veh)	1	1	17		

Intersection: 13: Redwood Road & Sergeant Court Drive, Interval #3

Movement	EB	EB	NB	SB
Directions Served	L	R	L	T
Maximum Queue (ft)	25	50	49	6
Average Queue (ft)	6	21	16	1
95th Queue (ft)	25	55	49	9
Link Distance (ft)		818		232
Upstream Blk Time (%)				
Queuing Penalty (veh)				
Storage Bay Dist (ft)	25		50	
Storage Blk Time (%)	8	14	4	
Queuing Penalty (veh)	2	1	22	

Intersection: 13: Redwood Road & Sergeant Court Drive, Interval #4

Movement	EB	EB	NB	SB
Directions Served	L	R	L	T
Maximum Queue (ft)	17	36	41	7
Average Queue (ft)	4	16	15	1
95th Queue (ft)	20	40	44	15
Link Distance (ft)		818		232
Upstream Blk Time (%)				
Queuing Penalty (veh)				
Storage Bay Dist (ft)	25		50	
Storage Blk Time (%)	6	11	2	
Queuing Penalty (veh)	2	1	9	

Intersection: 13: Redwood Road & Sergeant Court Drive, All Intervals

Movement	EB	EB	NB	NB	SB
Directions Served	L	R	L	T	T
Maximum Queue (ft)	32	63	55	9	13
Average Queue (ft)	5	19	15	0	0
95th Queue (ft)	22	48	44	9	9
Link Distance (ft)		818		509	232
Upstream Blk Time (%)					
Queuing Penalty (veh)					
Storage Bay Dist (ft)	25		50		
Storage Blk Time (%)	6	13	2		
Queuing Penalty (veh)	1	1	12		

Intersection: 19: 3600 West & 2100 North WB, Interval #1

Movement	WB	WB	WB	WB	NB	NB	NB	SB	SB	SB
Directions Served	L	T	T	R	L	T	T	T	T	R
Maximum Queue (ft)	137	139	132	139	22	149	142	403	363	284
Average Queue (ft)	132	127	105	113	5	99	91	296	267	106
95th Queue (ft)	146	146	153	161	24	148	144	424	388	283
Link Distance (ft)	71	71	71	71	260	260	260	760	760	
Upstream Blk Time (%)	52	36	22	18						
Queuing Penalty (veh)	186	127	77	64						
Storage Bay Dist (ft)										150
Storage Blk Time (%)									30	1
Queuing Penalty (veh)									75	3

Intersection: 19: 3600 West & 2100 North WB, Interval #2

Movement	WB	WB	WB	WB	NB	NB	NB	SB	SB	SB
Directions Served	L	T	T	R	L	T	T	T	T	R
Maximum Queue (ft)	142	136	130	136	27	154	156	422	422	298
Average Queue (ft)	128	120	92	106	7	125	123	344	328	155
95th Queue (ft)	158	152	142	153	29	178	180	464	464	355
Link Distance (ft)	71	71	71	71	260	260	260	760	760	
Upstream Blk Time (%)	58	39	25	26						
Queuing Penalty (veh)	221	149	94	101						
Storage Bay Dist (ft)										150
Storage Blk Time (%)									30	
Queuing Penalty (veh)									82	

Intersection: 19: 3600 West & 2100 North WB, Interval #3

Movement	WB	WB	WB	WB	NB	NB	NB	SB	SB	SB
Directions Served	L	T	T	R	L	T	T	T	T	R
Maximum Queue (ft)	139	137	134	134	16	134	147	439	423	255
Average Queue (ft)	130	125	104	111	2	100	103	297	267	105
95th Queue (ft)	147	151	149	157	15	145	156	447	420	283
Link Distance (ft)	71	71	71	71	260	260	260	760	760	
Upstream Blk Time (%)	45	35	19	18						
Queuing Penalty (veh)	161	125	67	65						
Storage Bay Dist (ft)										150
Storage Blk Time (%)									29	0
Queuing Penalty (veh)									73	0

Intersection: 19: 3600 West & 2100 North WB, Interval #4

Movement	WB	WB	WB	WB	NB	NB	NB	SB	SB	SB
Directions Served	L	T	T	R	L	T	T	T	T	R
Maximum Queue (ft)	139	134	127	146	18	146	141	375	370	242
Average Queue (ft)	128	109	88	106	4	108	107	304	283	102
95th Queue (ft)	153	152	146	161	21	159	158	396	408	276
Link Distance (ft)	71	71	71	71	260	260	260	760	760	
Upstream Blk Time (%)	54	34	19	24						
Queuing Penalty (veh)	193	122	68	86						
Storage Bay Dist (ft)										150
Storage Blk Time (%)									24	0
Queuing Penalty (veh)									60	0

Intersection: 19: 3600 West & 2100 North WB, All Intervals

Movement	WB	WB	WB	WB	NB	NB	NB	SB	SB	SB
Directions Served	L	T	T	R	L	T	T	T	T	R
Maximum Queue (ft)	150	147	137	155	32	172	168	475	472	300
Average Queue (ft)	129	120	97	109	5	108	106	310	286	117
95th Queue (ft)	152	154	149	158	23	160	163	438	427	303
Link Distance (ft)	71	71	71	71	260	260	260	760	760	
Upstream Blk Time (%)	52	36	21	22						
Queuing Penalty (veh)	190	131	76	79						
Storage Bay Dist (ft)										150
Storage Blk Time (%)									28	0
Queuing Penalty (veh)									73	1

Intersection: 20: 3600 West & 2100 North EB, Interval #1

Movement	EB	EB	EB	EB	NB	NB	SB	SB	SB
Directions Served	L	T	T	R	T	R	L	L	T
Maximum Queue (ft)	122	130	139	71	189	157	233	229	321
Average Queue (ft)	103	126	127	45	101	89	181	179	280
95th Queue (ft)	135	131	140	75	183	171	250	243	358
Link Distance (ft)	62	62	62	62	2313	2313	260	260	260
Upstream Blk Time (%)	34	44	43	2			0	0	14
Queuing Penalty (veh)	107	140	137	6			1	0	63
Storage Bay Dist (ft)									
Storage Blk Time (%)									
Queuing Penalty (veh)									

Intersection: 20: 3600 West & 2100 North EB, Interval #2

Movement	EB	EB	EB	EB	NB	NB	SB	SB	SB
Directions Served	L	T	T	R	T	R	L	L	T
Maximum Queue (ft)	129	126	135	74	226	187	237	247	311
Average Queue (ft)	107	124	127	48	144	115	184	178	267
95th Queue (ft)	141	131	136	76	238	199	257	257	364
Link Distance (ft)	62	62	62	62	2313	2313	260	260	260
Upstream Blk Time (%)	43	53	52	2			0	1	11
Queuing Penalty (veh)	148	182	176	8			1	4	55
Storage Bay Dist (ft)									
Storage Blk Time (%)									
Queuing Penalty (veh)									

Intersection: 20: 3600 West & 2100 North EB, Interval #3

Movement	EB	EB	EB	EB	NB	NB	SB	SB	SB
Directions Served	L	T	T	R	T	R	L	L	T
Maximum Queue (ft)	124	130	133	76	163	158	228	224	324
Average Queue (ft)	105	126	127	47	99	89	175	170	248
95th Queue (ft)	138	132	139	74	174	161	247	242	361
Link Distance (ft)	62	62	62	62	2313	2313	260	260	260
Upstream Blk Time (%)	37	43	43	2			0	0	9
Queuing Penalty (veh)	118	138	138	6			0	0	43
Storage Bay Dist (ft)									
Storage Blk Time (%)									
Queuing Penalty (veh)									

Intersection: 20: 3600 West & 2100 North EB, Interval #4

Movement	EB	EB	EB	EB	NB	NB	SB	SB	SB
Directions Served	L	T	T	R	T	R	L	L	T
Maximum Queue (ft)	127	129	141	76	159	176	205	207	312
Average Queue (ft)	103	125	127	44	102	93	138	130	267
95th Queue (ft)	145	134	144	78	171	171	219	222	352
Link Distance (ft)	62	62	62	62	2313	2313	260	260	260
Upstream Blk Time (%)	39	48	49	2				0	10
Queuing Penalty (veh)	125	154	156	6				0	47
Storage Bay Dist (ft)									
Storage Blk Time (%)									
Queuing Penalty (veh)									

Intersection: 20: 3600 West & 2100 North EB, All Intervals

Movement	EB	EB	EB	EB	NB	NB	SB	SB	SB
Directions Served	L	T	T	R	T	R	L	L	T
Maximum Queue (ft)	130	136	154	95	239	213	249	255	331
Average Queue (ft)	105	125	127	46	111	97	170	164	266
95th Queue (ft)	140	132	140	76	198	178	250	248	362
Link Distance (ft)	62	62	62	62	2313	2313	260	260	260
Upstream Blk Time (%)	38	47	47	2			0	0	11
Queuing Penalty (veh)	125	153	152	6			0	1	52
Storage Bay Dist (ft)									
Storage Blk Time (%)									
Queuing Penalty (veh)									

Intersection: 22: 2100 North WB, Interval #1

Movement	WB	WB	WB	WB
Directions Served	T	T	T	T
Maximum Queue (ft)	224	81	33	89
Average Queue (ft)	141	41	9	28
95th Queue (ft)	258	92	37	84
Link Distance (ft)	2054	2054	2054	
Upstream Blk Time (%)				
Queuing Penalty (veh)				
Storage Bay Dist (ft)				150
Storage Blk Time (%)	4			0
Queuing Penalty (veh)	10			0

Intersection: 22: 2100 North WB, Interval #2

Movement	WB	WB	WB	WB
Directions Served	T	T	T	T
Maximum Queue (ft)	221	102	76	108
Average Queue (ft)	124	35	17	23
95th Queue (ft)	284	105	74	96
Link Distance (ft)	2054	2054	2054	
Upstream Blk Time (%)				
Queuing Penalty (veh)				
Storage Bay Dist (ft)				150
Storage Blk Time (%)	7		0	1
Queuing Penalty (veh)	22		0	2

Intersection: 22: 2100 North WB, Interval #3

Movement	WB	WB	WB	WB
Directions Served	T	T	T	T
Maximum Queue (ft)	213	98	47	91
Average Queue (ft)	111	42	11	33
95th Queue (ft)	244	102	51	106
Link Distance (ft)	2054	2054	2054	
Upstream Blk Time (%)				
Queuing Penalty (veh)				
Storage Bay Dist (ft)				150
Storage Blk Time (%)	3			0
Queuing Penalty (veh)	8			1

Intersection: 22: 2100 North WB, Interval #4

Movement	WB	WB	WB	WB
Directions Served	T	T	T	T
Maximum Queue (ft)	195	71	40	104
Average Queue (ft)	99	21	7	22
95th Queue (ft)	213	70	40	85
Link Distance (ft)	2054	2054	2054	
Upstream Blk Time (%)				
Queuing Penalty (veh)				
Storage Bay Dist (ft)				150
Storage Blk Time (%)	2			0
Queuing Penalty (veh)	5			1

Intersection: 22: 2100 North WB, All Intervals

Movement	WB	WB	WB	WB
Directions Served	T	T	T	T
Maximum Queue (ft)	281	123	98	150
Average Queue (ft)	119	35	11	26
95th Queue (ft)	254	94	53	94
Link Distance (ft)	2054	2054	2054	
Upstream Blk Time (%)				
Queuing Penalty (veh)				
Storage Bay Dist (ft)				150
Storage Blk Time (%)	4		0	0
Queuing Penalty (veh)	11		0	1

Intersection: 23: 2100 North EB, Interval #1

Movement	EB	EB	SE
Directions Served	T	T	L
Maximum Queue (ft)	26	68	137
Average Queue (ft)	3	13	90
95th Queue (ft)	28	60	142
Link Distance (ft)	74	74	279
Upstream Blk Time (%)	0	0	
Queuing Penalty (veh)	1	3	
Storage Bay Dist (ft)			
Storage Blk Time (%)			
Queuing Penalty (veh)			

Intersection: 23: 2100 North EB, Interval #2

Movement	EB	EB	SE
Directions Served	T	T	L
Maximum Queue (ft)	26	51	207
Average Queue (ft)	4	9	115
95th Queue (ft)	28	45	211
Link Distance (ft)	74	74	279
Upstream Blk Time (%)	0	0	0
Queuing Penalty (veh)	1	3	1
Storage Bay Dist (ft)			
Storage Blk Time (%)			
Queuing Penalty (veh)			

Intersection: 23: 2100 North EB, Interval #3

Movement	EB	EB	SE
Directions Served	T	T	L
Maximum Queue (ft)	45	61	170
Average Queue (ft)	9	14	98
95th Queue (ft)	45	58	176
Link Distance (ft)	74	74	279
Upstream Blk Time (%)	0	0	
Queuing Penalty (veh)	2	2	
Storage Bay Dist (ft)			
Storage Blk Time (%)			
Queuing Penalty (veh)			

Intersection: 23: 2100 North EB, Interval #4

Movement	EB	EB	SE
Directions Served	T	T	L
Maximum Queue (ft)	26	67	154
Average Queue (ft)	4	12	93
95th Queue (ft)	29	56	170
Link Distance (ft)	74	74	279
Upstream Blk Time (%)	0	0	
Queuing Penalty (veh)	1	4	
Storage Bay Dist (ft)			
Storage Blk Time (%)			
Queuing Penalty (veh)			

Intersection: 23: 2100 North EB, All Intervals

Movement	EB	EB	SE
Directions Served	T	T	L
Maximum Queue (ft)	68	96	229
Average Queue (ft)	5	12	99
95th Queue (ft)	33	55	178
Link Distance (ft)	74	74	279
Upstream Blk Time (%)	0	0	0
Queuing Penalty (veh)	1	3	0
Storage Bay Dist (ft)			
Storage Blk Time (%)			
Queuing Penalty (veh)			

Intersection: 24: 2100 North EB, Interval #1

Movement	EB	EB	EB
Directions Served	LT	T	T
Maximum Queue (ft)	223	174	167
Average Queue (ft)	94	123	123
95th Queue (ft)	240	182	192
Link Distance (ft)		2002	2002
Upstream Blk Time (%)			
Queuing Penalty (veh)			
Storage Bay Dist (ft)	150		
Storage Blk Time (%)	3	2	3
Queuing Penalty (veh)	10	14	8

Intersection: 24: 2100 North EB, Interval #2

Movement	EB	EB	EB
Directions Served	LT	T	T
Maximum Queue (ft)	234	234	222
Average Queue (ft)	107	130	130
95th Queue (ft)	275	281	270
Link Distance (ft)		2002	2002
Upstream Blk Time (%)			
Queuing Penalty (veh)			
Storage Bay Dist (ft)	150		
Storage Blk Time (%)	7	5	4
Queuing Penalty (veh)	24	31	15

Intersection: 24: 2100 North EB, Interval #3

Movement	EB	EB	EB
Directions Served	LT	T	T
Maximum Queue (ft)	214	188	185
Average Queue (ft)	118	124	124
95th Queue (ft)	262	208	209
Link Distance (ft)		2002	2002
Upstream Blk Time (%)			
Queuing Penalty (veh)			
Storage Bay Dist (ft)	150		
Storage Blk Time (%)	4	2	2
Queuing Penalty (veh)	14	15	8

Intersection: 24: 2100 North EB, Interval #4

Movement	EB	EB	EB
Directions Served	LT	T	T
Maximum Queue (ft)	221	171	167
Average Queue (ft)	72	98	95
95th Queue (ft)	206	190	182
Link Distance (ft)		2002	2002
Upstream Blk Time (%)			
Queuing Penalty (veh)			
Storage Bay Dist (ft)	150		
Storage Blk Time (%)	4	2	2
Queuing Penalty (veh)	13	13	7

Intersection: 24: 2100 North EB, All Intervals

Movement	EB	EB	EB
Directions Served	LT	T	T
Maximum Queue (ft)	302	275	249
Average Queue (ft)	98	119	118
95th Queue (ft)	249	223	219
Link Distance (ft)		2002	2002
Upstream Blk Time (%)			
Queuing Penalty (veh)			
Storage Bay Dist (ft)	150		
Storage Blk Time (%)	5	3	3
Queuing Penalty (veh)	15	18	9

Intersection: 25: 2100 North WB, Interval #1

Movement	WB	NW
Directions Served	T	L
Maximum Queue (ft)	31	171
Average Queue (ft)	7	77
95th Queue (ft)	28	155
Link Distance (ft)	70	273
Upstream Blk Time (%)		
Queuing Penalty (veh)		
Storage Bay Dist (ft)		
Storage Blk Time (%)		
Queuing Penalty (veh)		

Intersection: 25: 2100 North WB, Interval #2

Movement	WB	NW
Directions Served	T	L
Maximum Queue (ft)	46	180
Average Queue (ft)	14	98
95th Queue (ft)	46	183
Link Distance (ft)	70	273
Upstream Blk Time (%)	0	0
Queuing Penalty (veh)	0	0
Storage Bay Dist (ft)		
Storage Blk Time (%)		
Queuing Penalty (veh)		

Intersection: 25: 2100 North WB, Interval #3

Movement	WB	NW
Directions Served	T	L
Maximum Queue (ft)	37	149
Average Queue (ft)	10	81
95th Queue (ft)	39	150
Link Distance (ft)	70	273
Upstream Blk Time (%)	0	
Queuing Penalty (veh)	0	
Storage Bay Dist (ft)		
Storage Blk Time (%)		
Queuing Penalty (veh)		

Intersection: 25: 2100 North WB, Interval #4

Movement	WB	WB	NW
Directions Served	T	T	L
Maximum Queue (ft)	3	36	157
Average Queue (ft)	0	12	76
95th Queue (ft)	6	41	163
Link Distance (ft)	70	70	273
Upstream Blk Time (%)		0	0
Queuing Penalty (veh)		0	1
Storage Bay Dist (ft)			
Storage Blk Time (%)			
Queuing Penalty (veh)			

Intersection: 25: 2100 North WB, All Intervals

Movement	WB	WB	NW
Directions Served	T	T	L
Maximum Queue (ft)	3	56	212
Average Queue (ft)	0	11	83
95th Queue (ft)	3	39	164
Link Distance (ft)	70	70	273
Upstream Blk Time (%)		0	0
Queuing Penalty (veh)		0	0
Storage Bay Dist (ft)			
Storage Blk Time (%)			
Queuing Penalty (veh)			

Intersection: 29: , Interval #1

Movement
Directions Served
Maximum Queue (ft)
Average Queue (ft)
95th Queue (ft)
Link Distance (ft)
Upstream Blk Time (%)
Queuing Penalty (veh)
Storage Bay Dist (ft)
Storage Blk Time (%)
Queuing Penalty (veh)

Intersection: 29: , Interval #2

Movement
Directions Served
Maximum Queue (ft)
Average Queue (ft)
95th Queue (ft)
Link Distance (ft)
Upstream Blk Time (%)
Queuing Penalty (veh)
Storage Bay Dist (ft)
Storage Blk Time (%)
Queuing Penalty (veh)

Intersection: 29: , Interval #3

Movement
Directions Served
Maximum Queue (ft)
Average Queue (ft)
95th Queue (ft)
Link Distance (ft)
Upstream Blk Time (%)
Queuing Penalty (veh)
Storage Bay Dist (ft)
Storage Blk Time (%)
Queuing Penalty (veh)

Intersection: 29: , Interval #4

Movement
Directions Served
Maximum Queue (ft)
Average Queue (ft)
95th Queue (ft)
Link Distance (ft)
Upstream Blk Time (%)
Queuing Penalty (veh)
Storage Bay Dist (ft)
Storage Blk Time (%)
Queuing Penalty (veh)

Intersection: 29: , All Intervals

Movement
Directions Served
Maximum Queue (ft)
Average Queue (ft)
95th Queue (ft)
Link Distance (ft)
Upstream Blk Time (%)
Queuing Penalty (veh)
Storage Bay Dist (ft)
Storage Blk Time (%)
Queuing Penalty (veh)

Intersection: 31: 400 East & Crossroads Blvd, Interval #1

Movement	EB	EB	EB	EB	WB	WB	WB	WB	NB	NB	NB	SB
Directions Served	L	T	T	R	L	T	T	R	L	T	R	L
Maximum Queue (ft)	62	48	74	12	89	150	151	14	51	29	33	42
Average Queue (ft)	24	15	40	2	41	100	90	2	20	6	18	13
95th Queue (ft)	60	49	79	10	84	157	153	11	55	27	43	42
Link Distance (ft)		1518	1518			1659	1659			443		
Upstream Blk Time (%)												
Queuing Penalty (veh)												
Storage Bay Dist (ft)	150			150	150			100	150		150	150
Storage Blk Time (%)						1	4					
Queuing Penalty (veh)						1	1					

Intersection: 31: 400 East & Crossroads Blvd, Interval #1

Movement	SB	SB
Directions Served	T	R
Maximum Queue (ft)	68	59
Average Queue (ft)	33	29
95th Queue (ft)	75	58
Link Distance (ft)	729	
Upstream Blk Time (%)		
Queuing Penalty (veh)		
Storage Bay Dist (ft)		150
Storage Blk Time (%)	0	
Queuing Penalty (veh)	0	

Intersection: 31: 400 East & Crossroads Blvd, Interval #2

Movement	EB	EB	EB	EB	WB	WB	WB	WB	NB	NB	NB	SB
Directions Served	L	T	T	R	L	T	T	R	L	T	R	L
Maximum Queue (ft)	57	61	72	14	74	181	157	18	52	24	49	60
Average Queue (ft)	26	26	43	3	40	117	102	5	22	6	21	21
95th Queue (ft)	64	68	81	17	80	187	176	20	58	24	50	69
Link Distance (ft)		1518	1518			1659	1659			443		
Upstream Blk Time (%)												
Queuing Penalty (veh)												
Storage Bay Dist (ft)	150			150	150			100	150		150	150
Storage Blk Time (%)					0	3	5					0
Queuing Penalty (veh)					0	2	2					0

Intersection: 31: 400 East & Crossroads Blvd, Interval #2

Movement	SB	SB
Directions Served	T	R
Maximum Queue (ft)	61	60
Average Queue (ft)	31	31
95th Queue (ft)	72	62
Link Distance (ft)	729	
Upstream Blk Time (%)		
Queuing Penalty (veh)		
Storage Bay Dist (ft)		150
Storage Blk Time (%)		
Queuing Penalty (veh)		

Intersection: 31: 400 East & Crossroads Blvd, Interval #3

Movement	EB	EB	EB	EB	WB	WB	WB	WB	NB	NB	NB	SB
Directions Served	L	T	T	R	L	T	T	R	L	T	R	L
Maximum Queue (ft)	52	57	74	11	84	170	150	21	40	30	40	43
Average Queue (ft)	22	20	40	2	42	106	89	7	22	7	19	17
95th Queue (ft)	54	58	77	11	84	176	157	22	51	27	43	46
Link Distance (ft)		1518	1518			1659	1659			443		
Upstream Blk Time (%)												
Queuing Penalty (veh)												
Storage Bay Dist (ft)	150			150	150			100	150		150	150
Storage Blk Time (%)						2	4					
Queuing Penalty (veh)						1	1					

Intersection: 31: 400 East & Crossroads Blvd, Interval #3

Movement	SB	SB
Directions Served	T	R
Maximum Queue (ft)	53	47
Average Queue (ft)	27	25
95th Queue (ft)	59	50
Link Distance (ft)	729	
Upstream Blk Time (%)		
Queuing Penalty (veh)		
Storage Bay Dist (ft)		150
Storage Blk Time (%)		
Queuing Penalty (veh)		

Intersection: 31: 400 East & Crossroads Blvd, Interval #4

Movement	EB	EB	EB	EB	WB	WB	WB	WB	NB	NB	NB	SB
Directions Served	L	T	T	R	L	T	T	R	L	T	R	L
Maximum Queue (ft)	54	60	70	8	94	173	151	13	48	25	50	52
Average Queue (ft)	25	18	36	1	43	111	98	3	20	8	19	20
95th Queue (ft)	64	55	74	8	95	179	167	14	51	29	53	53
Link Distance (ft)		1518	1518			1659	1659			443		
Upstream Blk Time (%)												
Queuing Penalty (veh)												
Storage Bay Dist (ft)	150			150	150			100	150		150	150
Storage Blk Time (%)						2	5					
Queuing Penalty (veh)						1	2					

Intersection: 31: 400 East & Crossroads Blvd, Interval #4

Movement	SB	SB
Directions Served	T	R
Maximum Queue (ft)	55	58
Average Queue (ft)	23	27
95th Queue (ft)	54	58
Link Distance (ft)	729	
Upstream Blk Time (%)		
Queuing Penalty (veh)		
Storage Bay Dist (ft)		150
Storage Blk Time (%)		
Queuing Penalty (veh)		

Intersection: 31: 400 East & Crossroads Blvd, All Intervals

Movement	EB	EB	EB	EB	WB	WB	WB	WB	NB	NB	NB	SB
Directions Served	L	T	T	R	L	T	T	R	L	T	R	L
Maximum Queue (ft)	78	82	89	20	112	196	176	24	69	44	64	75
Average Queue (ft)	24	20	40	2	41	109	95	4	21	7	19	17
95th Queue (ft)	60	58	78	12	86	176	164	17	54	27	48	54
Link Distance (ft)		1518	1518			1659	1659			443		
Upstream Blk Time (%)												
Queuing Penalty (veh)												
Storage Bay Dist (ft)	150			150	150			100	150		150	150
Storage Blk Time (%)					0	2	4					0
Queuing Penalty (veh)					0	1	2					0

Intersection: 31: 400 East & Crossroads Blvd, All Intervals

Movement	SB	SB
Directions Served	T	R
Maximum Queue (ft)	82	78
Average Queue (ft)	29	28
95th Queue (ft)	66	57
Link Distance (ft)	729	
Upstream Blk Time (%)		
Queuing Penalty (veh)		
Storage Bay Dist (ft)		150
Storage Blk Time (%)	0	
Queuing Penalty (veh)	0	

Intersection: 34: Crossroads Blvd, Interval #1

Movement
Directions Served
Maximum Queue (ft)
Average Queue (ft)
95th Queue (ft)
Link Distance (ft)
Upstream Blk Time (%)
Queuing Penalty (veh)
Storage Bay Dist (ft)
Storage Blk Time (%)
Queuing Penalty (veh)

Intersection: 34: Crossroads Blvd, Interval #2

Movement
Directions Served
Maximum Queue (ft)
Average Queue (ft)
95th Queue (ft)
Link Distance (ft)
Upstream Blk Time (%)
Queuing Penalty (veh)
Storage Bay Dist (ft)
Storage Blk Time (%)
Queuing Penalty (veh)

Intersection: 34: Crossroads Blvd, Interval #3

Movement
Directions Served
Maximum Queue (ft)
Average Queue (ft)
95th Queue (ft)
Link Distance (ft)
Upstream Blk Time (%)
Queuing Penalty (veh)
Storage Bay Dist (ft)
Storage Blk Time (%)
Queuing Penalty (veh)

Intersection: 34: Crossroads Blvd, Interval #4

Movement
Directions Served
Maximum Queue (ft)
Average Queue (ft)
95th Queue (ft)
Link Distance (ft)
Upstream Blk Time (%)
Queuing Penalty (veh)
Storage Bay Dist (ft)
Storage Blk Time (%)
Queuing Penalty (veh)

Intersection: 34: Crossroads Blvd, All Intervals

Movement
Directions Served
Maximum Queue (ft)
Average Queue (ft)
95th Queue (ft)
Link Distance (ft)
Upstream Blk Time (%)
Queuing Penalty (veh)
Storage Bay Dist (ft)
Storage Blk Time (%)
Queuing Penalty (veh)

Intersection: 38: , Interval #1

Movement	EB	EB	EB	WB	WB	WB	NB	NB	NB	NB	SB	SB
Directions Served	L	T	R	L	T	R	L	L	T	TR	L	T
Maximum Queue (ft)	934	810	185	124	120	68	139	146	98	109	136	298
Average Queue (ft)	770	404	115	79	71	43	95	98	45	59	67	207
95th Queue (ft)	1102	1097	203	139	129	71	154	162	100	113	138	311
Link Distance (ft)	951	951			451				1010	1010		2121
Upstream Blk Time (%)	32	17										
Queuing Penalty (veh)	0	0										
Storage Bay Dist (ft)			150	150		150	200	200			150	
Storage Blk Time (%)		0	5	2	0			1			0	14
Queuing Penalty (veh)		1	3	4	0			2			0	21

Intersection: 38: , Interval #1

Movement	SB	SB
Directions Served	T	R
Maximum Queue (ft)	306	158
Average Queue (ft)	208	61
95th Queue (ft)	311	138
Link Distance (ft)	2121	
Upstream Blk Time (%)		
Queuing Penalty (veh)		
Storage Bay Dist (ft)		150
Storage Blk Time (%)	16	
Queuing Penalty (veh)	59	

Intersection: 38: , Interval #2

Movement	EB	EB	EB	WB	WB	WB	NB	NB	NB	NB	SB	SB
Directions Served	L	T	R	L	T	R	L	L	T	TR	L	T
Maximum Queue (ft)	969	971	146	154	168	100	188	201	147	127	237	358
Average Queue (ft)	957	867	60	92	73	52	120	127	55	68	81	243
95th Queue (ft)	993	1280	157	173	166	107	200	205	132	132	205	353
Link Distance (ft)	951	951			451				1010	1010		2121
Upstream Blk Time (%)	89	62			0							
Queuing Penalty (veh)	0	0			0							
Storage Bay Dist (ft)			150	150		150	200	200			150	
Storage Blk Time (%)		0	5	5	1		2	3	0		1	17
Queuing Penalty (veh)		0	4	13	1		7	7	0		9	27

Intersection: 38: , Interval #2

Movement	SB	SB
Directions Served	T	R
Maximum Queue (ft)	355	245
Average Queue (ft)	246	78
95th Queue (ft)	352	213
Link Distance (ft)	2121	
Upstream Blk Time (%)		
Queuing Penalty (veh)		
Storage Bay Dist (ft)		150
Storage Blk Time (%)	19	0
Queuing Penalty (veh)	75	0

Intersection: 38: , Interval #3

Movement	EB	EB	EB	WB	WB	WB	NB	NB	NB	NB	SB	SB
Directions Served	L	T	R	L	T	R	L	L	T	TR	L	T
Maximum Queue (ft)	967	974	168	141	133	78	181	187	116	120	163	302
Average Queue (ft)	963	898	70	90	78	50	125	127	58	72	83	219
95th Queue (ft)	974	1210	181	151	140	82	223	226	128	132	168	322
Link Distance (ft)	951	951			451				1010	1010		2121
Upstream Blk Time (%)	94	49										
Queuing Penalty (veh)	0	0										
Storage Bay Dist (ft)			150	150		150	200	200			150	
Storage Blk Time (%)		1	6	3	1		3	5			0	13
Queuing Penalty (veh)		3	5	8	2		9	12			1	19

Intersection: 38: , Interval #3

Movement	SB	SB
Directions Served	T	R
Maximum Queue (ft)	305	135
Average Queue (ft)	224	73
95th Queue (ft)	330	182
Link Distance (ft)	2121	
Upstream Blk Time (%)		
Queuing Penalty (veh)		
Storage Bay Dist (ft)		150
Storage Blk Time (%)	15	0
Queuing Penalty (veh)	57	1

Intersection: 38: , Interval #4

Movement	EB	EB	EB	WB	WB	WB	NB	NB	NB	NB	SB	SB
Directions Served	L	T	R	L	T	R	L	L	T	TR	L	T
Maximum Queue (ft)	976	970	160	142	122	75	153	155	108	138	157	327
Average Queue (ft)	963	843	77	82	67	48	93	100	50	69	70	225
95th Queue (ft)	985	1304	184	142	131	82	160	168	113	145	163	345
Link Distance (ft)	951	951			451				1010	1010		2121
Upstream Blk Time (%)	95	58										
Queuing Penalty (veh)	0	0										
Storage Bay Dist (ft)			150	150		150	200	200			150	
Storage Blk Time (%)		1	5	2	1	0	1	1			0	14
Queuing Penalty (veh)		2	4	4	2	0	3	3			0	21

Intersection: 38: , Interval #4

Movement	SB	SB
Directions Served	T	R
Maximum Queue (ft)	331	92
Average Queue (ft)	231	50
95th Queue (ft)	348	94
Link Distance (ft)	2121	
Upstream Blk Time (%)		
Queuing Penalty (veh)		
Storage Bay Dist (ft)		150
Storage Blk Time (%)	15	
Queuing Penalty (veh)	57	

Intersection: 38: , All Intervals

Movement	EB	EB	EB	WB	WB	WB	NB	NB	NB	NB	SB	SB
Directions Served	L	T	R	L	T	R	L	L	T	TR	L	T
Maximum Queue (ft)	980	983	215	178	190	118	206	219	174	163	277	385
Average Queue (ft)	913	753	81	86	72	48	108	113	52	67	75	224
95th Queue (ft)	1130	1346	187	153	143	87	189	195	119	132	171	335
Link Distance (ft)	951	951			451				1010	1010		2121
Upstream Blk Time (%)	77	46			0							
Queuing Penalty (veh)	0	0			0							
Storage Bay Dist (ft)			150	150		150	200	200			150	
Storage Blk Time (%)		1	5	3	1	0	2	2	0		0	15
Queuing Penalty (veh)		2	4	7	1	0	5	6	0		3	22

Intersection: 38: , All Intervals

Movement	SB	SB
Directions Served	T	R
Maximum Queue (ft)	400	281
Average Queue (ft)	227	65
95th Queue (ft)	338	164
Link Distance (ft)	2121	
Upstream Blk Time (%)		
Queuing Penalty (veh)		
Storage Bay Dist (ft)		150
Storage Blk Time (%)	16	0
Queuing Penalty (veh)	62	0

Network Summary

Network wide Queuing Penalty, Interval #1: 1222
Network wide Queuing Penalty, Interval #2: 1597
Network wide Queuing Penalty, Interval #3: 1222
Network wide Queuing Penalty, Interval #4: 1259
Network wide Queuing Penalty, All Intervals: 1325

HALES ENGINEERING
innovative transportation solutions

SimTraffic LOS Report

Project: Saratoga Springs - Cold Spring Ranch
Analysis Period: *Future (2040) Plus Project*
Time Period: *Evening Peak Hour* **Project #:** *UT16-928*

Intersection: Redwood Road & Crossroads Blvd
Type: Signalized

Approach	Movement	Demand Volume	Volume Served		Delay/Veh (sec)	
			Avg	%	Avg	LOS
NB	L	225	232	103	60.2	*E*
	T	744	744	100	29.7	*C*
	R	310	316	102	6.2	*A*
	Subtotal	1,279	1,292	101	29.4	*C*
SB	L	255	250	98	58.3	*E*
	T	1,168	1,120	96	21.9	*C*
	R	245	238	97	5.4	*A*
	Subtotal	1,668	1,608	96	25.1	*C*
EB	L	185	182	98	55.1	*E*
	T	336	330	98	46.3	*D*
	R	25	23	91	15.5	*B*
	Subtotal	546	535	98	48.0	*D*
WB	L	307	309	101	76.3	*E*
	T	531	527	99	38.8	*D*
	R	215	209	97	9.4	*A*
	Subtotal	1,053	1,045	99	44.0	*D*
Total		4,547	4,480	99	33.7	*C*

Intersection: Redwood Road & Commerce Drive
Type: Signalized

Approach	Movement	Demand Volume	Volume Served		Delay/Veh (sec)	
			Avg	%	Avg	LOS
NB	L	120	117	98	45.8	*D*
	T	997	972	98	27.5	*C*
	R	65	69	106	8.3	*A*
	Subtotal	1,182	1,158	98	28.2	*C*
SB	L	110	105	95	60.2	*E*
	T	1,502	1,427	95	12.0	*B*
	R	325	308	95	5.2	*A*
	Subtotal	1,937	1,840	95	13.6	*B*
EB	L	200	200	100	61.6	*E*
	T	55	56	102	47.5	*D*
	R	125	135	108	14.2	*B*
	Subtotal	380	391	103	43.2	*D*
WB	L	40	40	101	51.5	*D*
	T	40	43	108	40.8	*D*
	R	100	99	99	11.0	*B*
	Subtotal	180	182	101	26.9	*C*
Total		3,677	3,571	97	22.4	*C*

HALES ENGINEERING
innovative transportation solutions

SimTraffic LOS Report

Project: Saratoga Springs - Cold Spring Ranch
Analysis Period: *Future (2040) Plus Project*
Time Period: *Evening Peak Hour* **Project #:** *UT16-928*

Intersection: Redwood Road & Aspen Hills Blvd
Type: Signalized

Approach	Movement	Demand Volume	Volume Served		Delay/Veh (sec)	
			Avg	%	Avg	LOS
NB	L	45	41	92	88.9	*F*
	T	1,123	1,104	98	12.0	*B*
	R	122	115	94	3.8	*A*
	Subtotal	1,290	1,260	98	13.8	*B*
SB	L	230	225	98	45.3	*D*
	T	1,695	1,617	95	12.5	*B*
	R	85	82	96	10.6	*B*
	Subtotal	2,010	1,924	96	16.3	*B*
EB	L	10	9	90	67.6	*E*
	R	25	24	95	27.4	*C*
	Subtotal	35	33	94	38.4	*D*
WB	L	240	234	97	62.0	*E*
	R	252	252	100	19.5	*B*
	Subtotal	492	486	99	40.0	*D*
Total		3,828	3,703	97	18.8	*B*

Intersection: Redwood Road & Sergeant Court Drive
Type: Unsignalized

Approach	Movement	Demand Volume	Volume Served		Delay/Veh (sec)	
			Avg	%	Avg	LOS
NB	L	20	20	99	46.0	*E*
	T	1,182	1,162	98	3.9	*A*
	R	97	88	91	3.1	*A*
	Subtotal	1,299	1,270	98	4.5	*A*
SB	L	120	120	100	16.8	*C*
	T	1,821	1,735	95	2.8	*A*
	R	20	20	99	2.2	*A*
	Subtotal	1,961	1,875	96	3.7	*A*
EB	L	5	5	100	115.2	*F*
	R	25	25	99	38.9	*E*
	Subtotal	30	30	100	51.6	*F*
WB	L	35	36	104	279.8	*F*
	R	143	138	97	14.5	*B*
	Subtotal	***178***	***174***	***98***	***69.4***	***F***
Total		3,468	3,349	97	7.9	*A*

HALES ENGINEERING
innovative transportation solutions

SimTraffic LOS Report

Project: Saratoga Springs - Cold Spring Ranch
Analysis Period: *Future (2040) Plus Project*
Time Period: *Evening Peak Hour* **Project #:** *UT16-928*

Intersection: 3600 West & 2100 North WB
Type: Signalized

Approach	Movement	Demand Volume	Volume Served		Delay/Veh (sec)	
			Avg	%	Avg	LOS
NB	L	115	107	93	64.9	*E*
	T	395	389	98	25.6	*C*
	Subtotal	510	496	97	34.1	*C*
SB	T	1,062	1,092	103	36.8	*D*
	R	258	257	100	9.8	*A*
	Subtotal	1,320	1,349	102	31.7	*C*
WB	L	518	511	99	24.9	*C*
	T	490	486	99	24.0	*C*
	R	610	617	101	7.4	*A*
	Subtotal	1,618	1,614	100	17.9	*B*
Total		3,448	3,459	100	25.6	*C*

Intersection: 3600 West & 2100 North EB
Type: Signalized

Approach	Movement	Demand Volume	Volume Served		Delay/Veh (sec)	
			Avg	%	Avg	LOS
NB	T	260	254	98	46.0	*D*
	R	350	354	101	46.5	*D*
	Subtotal	610	608	100	46.3	*D*
SB	L	1,000	983	98	35.2	*D*
	T	580	619	107	4.4	*A*
	Subtotal	1,580	1,602	101	23.3	*C*
EB	L	250	241	96	30.8	*C*
	T	851	829	97	25.3	*C*
	R	334	328	98	7.0	*A*
	Subtotal	1,435	1,398	97	22.0	*C*
Total		3,625	3,608	100	26.8	*C*

HALES ENGINEERING
innovative transportation solutions

SimTraffic LOS Report

Project: Saratoga Springs - Cold Spring Ranch
Analysis Period: *Future (2040) Plus Project*
Time Period: *Evening Peak Hour* **Project #:** *UT16-928*

Intersection: 400 East & Crossroads Blvd
Type: Signalized

Approach	Movement	Demand Volume	Volume Served		Delay/Veh (sec)	
			Avg	%	Avg	LOS
NB	L	25	26	103	42.5	*D*
	T	10	11	107	35.7	*D*
	R	45	47	105	7.6	*A*
	Subtotal	80	84	105	22.1	*C*
SB	L	49	48	98	41.3	*D*
	T	40	39	98	38.0	*D*
	R	102	104	102	8.3	*A*
	Subtotal	191	191	100	22.7	*C*
EB	L	66	67	102	19.7	*B*
	T	781	784	100	4.6	*A*
	R	35	36	104	2.2	*A*
	Subtotal	882	887	101	5.6	*A*
WB	L	85	87	102	29.3	*C*
	T	925	932	101	10.3	*B*
	R	78	79	101	2.7	*A*
	Subtotal	1,088	1,098	101	11.3	*B*
Total		2,241	2,260	101	10.4	*B*

2: Redwood Road & Crossroads Blvd Performance by movement Interval #1 5:00

Movement	EBL	EBT	EBR	WBL	WBT	WBR	NBL	NBT	NBR	SBL	SBT	SBR
Denied Delay (hr)	0.0	0.0	0.0	0.0	0.0	0.0	0.0	0.0	0.1	0.0	0.0	0.0
Denied Del/Veh (s)	2.8	0.2	3.6	0.0	0.0	0.0	2.5	0.6	2.5	0.2	0.0	0.0
Total Delay (hr)	0.7	1.2	0.0	1.3	1.4	0.1	0.9	1.4	0.1	1.0	1.6	0.1
Total Del/Veh (s)	52.6	45.3	12.4	56.4	36.5	7.7	53.7	26.4	5.8	56.8	20.5	5.5
Vehicles Entered	44	87	6	78	129	54	53	177	77	60	276	60
Vehicles Exited	46	90	7	78	130	52	56	175	77	56	263	58
Hourly Exit Rate	184	360	28	312	520	208	224	700	308	224	1052	232
Input Volume	182	330	25	302	522	211	221	731	305	251	1147	241
% of Volume	101	109	112	103	100	99	101	96	101	89	92	96

2: Redwood Road & Crossroads Blvd Performance by movement Interval #1 5:00

Movement	All
Denied Delay (hr)	0.2
Denied Del/Veh (s)	0.5
Total Delay (hr)	9.9
Total Del/Veh (s)	30.4
Vehicles Entered	1101
Vehicles Exited	1088
Hourly Exit Rate	4352
Input Volume	4468
% of Volume	97

2: Redwood Road & Crossroads Blvd Performance by movement Interval #2 5:15

Movement	EBL	EBT	EBR	WBL	WBT	WBR	NBL	NBT	NBR	SBL	SBT	SBR
Denied Delay (hr)	0.0	0.0	0.0	0.0	0.0	0.0	0.0	0.0	0.1	0.0	0.0	0.0
Denied Del/Veh (s)	2.7	0.2	3.1	0.0	0.0	0.0	2.4	0.6	2.5	0.2	0.0	0.0
Total Delay (hr)	0.8	1.1	0.0	2.0	1.5	0.2	1.1	1.8	0.2	1.1	1.9	0.1
Total Del/Veh (s)	55.0	45.3	14.8	80.0	36.7	10.0	58.0	30.1	6.4	53.9	22.6	5.1
Vehicles Entered	49	84	6	82	140	53	64	200	85	66	284	58
Vehicles Exited	44	82	6	82	142	55	65	206	85	65	288	59
Hourly Exit Rate	176	328	24	328	568	220	260	824	340	260	1152	236
Input Volume	195	354	26	323	558	226	237	783	326	268	1230	258
% of Volume	90	93	92	102	102	97	110	105	104	97	94	91

2: Redwood Road & Crossroads Blvd Performance by movement Interval #2 5:15

Movement	All
Denied Delay (hr)	0.2
Denied Del/Veh (s)	0.6
Total Delay (hr)	11.7
Total Del/Veh (s)	33.8
Vehicles Entered	1171
Vehicles Exited	1179
Hourly Exit Rate	4716
Input Volume	4784
% of Volume	99

2: Redwood Road & Crossroads Blvd Performance by movement Interval #3 5:30

Movement	EBL	EBT	EBR	WBL	WBT	WBR	NBL	NBT	NBR	SBL	SBT	SBR
Denied Delay (hr)	0.0	0.0	0.0	0.0	0.0	0.0	0.0	0.0	0.1	0.0	0.0	0.0
Denied Del/Veh (s)	2.6	0.2	3.6	0.0	0.0	0.0	2.5	0.6	2.5	0.2	0.0	0.0
Total Delay (hr)	0.8	1.0	0.0	1.8	1.6	0.1	1.0	1.5	0.1	1.0	1.7	0.1
Total Del/Veh (s)	49.2	42.3	18.3	80.2	40.9	9.2	57.2	28.2	5.9	50.9	20.4	5.2
Vehicles Entered	49	82	4	74	136	52	58	178	76	61	276	61
Vehicles Exited	49	75	4	71	126	51	60	181	77	64	287	62
Hourly Exit Rate	196	300	16	284	504	204	240	724	308	256	1148	248
Input Volume	182	330	25	302	522	211	221	731	305	251	1147	241
% of Volume	108	91	64	94	97	97	109	99	101	102	100	103

2: Redwood Road & Crossroads Blvd Performance by movement Interval #3 5:30

Movement	All
Denied Delay (hr)	0.2
Denied Del/Veh (s)	0.6
Total Delay (hr)	10.7
Total Del/Veh (s)	32.6
Vehicles Entered	1107
Vehicles Exited	1107
Hourly Exit Rate	4428
Input Volume	4468
% of Volume	99

2: Redwood Road & Crossroads Blvd Performance by movement Interval #4 5:45

Movement	EBL	EBT	EBR	WBL	WBT	WBR	NBL	NBT	NBR	SBL	SBT	SBR
Denied Delay (hr)	0.0	0.0	0.0	0.0	0.0	0.0	0.0	0.0	0.1	0.0	0.0	0.0
Denied Del/Veh (s)	2.6	0.2	3.0	0.0	0.0	0.0	2.4	0.6	2.5	0.2	0.0	0.0
Total Delay (hr)	0.7	1.1	0.0	1.6	1.4	0.1	1.0	1.5	0.1	1.1	1.6	0.1
Total Del/Veh (s)	49.7	41.8	17.5	66.7	34.6	9.1	60.1	29.0	6.2	54.1	20.6	4.9
Vehicles Entered	42	79	7	78	127	50	58	180	76	65	277	58
Vehicles Exited	43	83	6	78	128	52	52	183	77	65	282	59
Hourly Exit Rate	172	332	24	312	512	208	208	732	308	260	1128	236
Input Volume	182	330	25	302	522	211	221	731	305	251	1147	241
% of Volume	95	101	96	103	98	99	94	100	101	104	98	98

2: Redwood Road & Crossroads Blvd Performance by movement Interval #4 5:45

Movement	All
Denied Delay (hr)	0.2
Denied Del/Veh (s)	0.6
Total Delay (hr)	10.3
Total Del/Veh (s)	31.6
Vehicles Entered	1097
Vehicles Exited	1108
Hourly Exit Rate	4432
Input Volume	4468
% of Volume	99

2: Redwood Road & Crossroads Blvd Performance by movement Entire Run

Movement	EBL	EBT	EBR	WBL	WBT	WBR	NBL	NBT	NBR	SBL	SBT	SBR
Denied Delay (hr)	0.1	0.0	0.0	0.0	0.0	0.0	0.2	0.1	0.2	0.0	0.0	0.0
Denied Del/Veh (s)	2.7	0.2	3.3	0.0	0.0	0.0	2.5	0.6	2.5	0.2	0.0	0.0
Total Delay (hr)	2.9	4.3	0.1	6.8	5.8	0.5	4.0	6.2	0.5	4.1	6.8	0.4
Total Del/Veh (s)	55.1	46.3	15.5	76.3	38.8	9.4	60.2	29.7	6.2	58.3	21.9	5.4
Vehicles Entered	184	332	23	313	533	210	234	735	315	253	1113	236
Vehicles Exited	182	330	23	309	527	209	232	744	316	250	1120	238
Hourly Exit Rate	182	330	23	309	527	209	232	744	316	250	1120	238
Input Volume	185	336	25	307	531	215	225	744	310	255	1168	245
% of Volume	98	98	91	101	99	97	103	100	102	98	96	97

2: Redwood Road & Crossroads Blvd Performance by movement Entire Run

Movement	All
Denied Delay (hr)	0.7
Denied Del/Veh (s)	0.6
Total Delay (hr)	42.5
Total Del/Veh (s)	33.7
Vehicles Entered	4481
Vehicles Exited	4480
Hourly Exit Rate	4480
Input Volume	4547
% of Volume	99

3: Redwood Road & Commerce Drive Performance by movement Interval #1 5:00

Movement	EBL	EBT	EBR	WBL	WBT	WBR	NBL	NBT	NBR	SBL	SBT	SBR
Denied Delay (hr)	0.0	0.0	0.0	0.0	0.0	0.0	0.0	0.0	0.0	0.0	0.0	0.0
Denied Del/Veh (s)	2.8	0.7	2.5	4.2	0.3	3.8	0.0	0.0	0.1	0.0	0.0	0.1
Total Delay (hr)	0.8	0.2	0.1	0.1	0.1	0.1	0.3	1.8	0.0	0.4	1.2	0.1
Total Del/Veh (s)	54.9	43.1	12.6	42.1	38.1	10.5	40.5	26.6	7.3	52.3	11.9	5.5
Vehicles Entered	48	14	32	9	11	23	29	236	17	26	356	80
Vehicles Exited	48	14	33	10	11	22	29	237	17	27	355	79
Hourly Exit Rate	192	56	132	40	44	88	116	948	68	108	1420	316
Input Volume	196	54	123	39	39	98	118	979	64	108	1475	319
% of Volume	98	104	107	103	113	90	98	97	106	100	96	99

3: Redwood Road & Commerce Drive Performance by movement Interval #1 5:00

Movement	All
Denied Delay (hr)	0.1
Denied Del/Veh (s)	0.4
Total Delay (hr)	5.4
Total Del/Veh (s)	21.3
Vehicles Entered	881
Vehicles Exited	882
Hourly Exit Rate	3528
Input Volume	3612
% of Volume	98

3: Redwood Road & Commerce Drive Performance by movement Interval #2 5:15

Movement	EBL	EBT	EBR	WBL	WBT	WBR	NBL	NBT	NBR	SBL	SBT	SBR
Denied Delay (hr)	0.0	0.0	0.0	0.0	0.0	0.0	0.0	0.0	0.0	0.0	0.0	0.0
Denied Del/Veh (s)	2.6	0.9	2.6	3.6	0.5	3.8	0.1	0.0	0.1	0.0	0.0	0.0
Total Delay (hr)	0.9	0.2	0.1	0.1	0.1	0.1	0.4	2.2	0.0	0.5	1.2	0.1
Total Del/Veh (s)	56.8	47.3	14.8	51.1	36.0	11.1	53.6	28.8	8.3	59.9	11.8	5.0
Vehicles Entered	53	16	34	10	10	28	28	268	17	27	368	77
Vehicles Exited	54	15	35	10	10	28	28	257	17	27	365	78
Hourly Exit Rate	216	60	140	40	40	112	112	1028	68	108	1460	312
Input Volume	211	58	132	42	42	105	126	1050	68	116	1581	342
% of Volume	102	103	106	95	95	107	89	98	100	93	92	91

3: Redwood Road & Commerce Drive Performance by movement Interval #2 5:15

Movement	All
Denied Delay (hr)	0.1
Denied Del/Veh (s)	0.4
Total Delay (hr)	6.1
Total Del/Veh (s)	22.8
Vehicles Entered	936
Vehicles Exited	924
Hourly Exit Rate	3696
Input Volume	3873
% of Volume	95

3: Redwood Road & Commerce Drive Performance by movement Interval #3 5:30

Movement	EBL	EBT	EBR	WBL	WBT	WBR	NBL	NBT	NBR	SBL	SBT	SBR
Denied Delay (hr)	0.0	0.0	0.0	0.0	0.0	0.0	0.0	0.0	0.0	0.0	0.0	0.0
Denied Del/Veh (s)	2.6	0.8	2.8	3.9	0.4	3.9	0.0	0.0	0.3	0.0	0.0	0.1
Total Delay (hr)	0.9	0.2	0.1	0.2	0.1	0.1	0.4	1.8	0.0	0.5	1.3	0.1
Total Del/Veh (s)	61.9	42.4	14.9	49.2	36.9	10.6	39.3	25.1	7.9	62.0	12.5	5.1
Vehicles Entered	49	15	34	10	11	24	31	244	17	28	360	76
Vehicles Exited	51	15	35	10	11	25	30	238	16	27	353	75
Hourly Exit Rate	204	60	140	40	44	100	120	952	64	108	1412	300
Input Volume	196	54	123	39	39	98	118	979	64	108	1475	319
% of Volume	104	111	114	103	113	102	102	97	100	100	96	94

3: Redwood Road & Commerce Drive Performance by movement Interval #3 5:30

Movement	All
Denied Delay (hr)	0.1
Denied Del/Veh (s)	0.4
Total Delay (hr)	5.7
Total Del/Veh (s)	21.8
Vehicles Entered	899
Vehicles Exited	886
Hourly Exit Rate	3544
Input Volume	3612
% of Volume	98

3: Redwood Road & Commerce Drive Performance by movement Interval #4 5:45

Movement	EBL	EBT	EBR	WBL	WBT	WBR	NBL	NBT	NBR	SBL	SBT	SBR
Denied Delay (hr)	0.0	0.0	0.0	0.0	0.0	0.0	0.0	0.0	0.0	0.0	0.0	0.0
Denied Del/Veh (s)	2.8	1.0	2.9	3.9	0.5	3.7	0.0	0.0	0.0	0.0	0.0	0.0
Total Delay (hr)	0.8	0.2	0.1	0.2	0.1	0.1	0.4	1.8	0.0	0.5	1.1	0.1
Total Del/Veh (s)	57.1	48.3	12.7	54.3	41.7	10.3	40.7	24.5	8.8	60.6	10.6	4.9
Vehicles Entered	48	12	33	10	10	25	30	238	18	26	348	76
Vehicles Exited	46	12	33	10	11	25	30	241	19	24	354	76
Hourly Exit Rate	184	48	132	40	44	100	120	964	76	96	1416	304
Input Volume	196	54	123	39	39	98	118	979	64	108	1475	319
% of Volume	94	89	107	103	113	102	102	98	119	89	96	95

3: Redwood Road & Commerce Drive Performance by movement Interval #4 5:45

Movement	All
Denied Delay (hr)	0.1
Denied Del/Veh (s)	0.5
Total Delay (hr)	5.3
Total Del/Veh (s)	20.5
Vehicles Entered	874
Vehicles Exited	881
Hourly Exit Rate	3524
Input Volume	3612
% of Volume	98

3: Redwood Road & Commerce Drive Performance by movement Entire Run

Movement	EBL	EBT	EBR	WBL	WBT	WBR	NBL	NBT	NBR	SBL	SBT	SBR
Denied Delay (hr)	0.1	0.0	0.1	0.0	0.0	0.1	0.0	0.0	0.0	0.0	0.0	0.0
Denied Del/Veh (s)	2.7	0.9	2.7	3.9	0.4	3.9	0.0	0.0	0.1	0.0	0.0	0.1
Total Delay (hr)	3.5	0.8	0.5	0.6	0.5	0.3	1.5	7.6	0.2	1.8	4.8	0.4
Total Del/Veh (s)	61.6	47.5	14.2	51.5	40.8	11.0	45.8	27.5	8.3	60.2	12.0	5.2
Vehicles Entered	198	56	134	39	42	99	119	984	69	106	1432	309
Vehicles Exited	200	56	135	40	43	99	117	972	69	105	1427	308
Hourly Exit Rate	200	56	135	40	43	99	117	972	69	105	1427	308
Input Volume	200	55	125	40	40	100	120	997	65	110	1502	325
% of Volume	100	102	108	101	108	99	98	98	106	95	95	95

3: Redwood Road & Commerce Drive Performance by movement Entire Run

Movement	All
Denied Delay (hr)	0.4
Denied Del/Veh (s)	0.4
Total Delay (hr)	22.5
Total Del/Veh (s)	22.4
Vehicles Entered	3587
Vehicles Exited	3571
Hourly Exit Rate	3571
Input Volume	3677
% of Volume	97

11: Redwood Road & Aspen Hills Blvd Performance by movement Interval #1 5:00

Movement	EBL	EBR	WBL	WBR	NBL	NBT	NBR	SBL	SBT	SBR	All
Denied Delay (hr)	0.0	0.0	0.1	0.1	0.0	0.0	0.0	0.0	0.0	0.0	0.1
Denied Del/Veh (s)	3.3	2.6	3.5	3.6	0.0	0.0	0.0	0.0	0.0	0.0	0.5
Total Delay (hr)	0.0	0.1	0.9	0.3	0.2	0.8	0.0	0.6	1.4	0.1	4.5
Total Del/Veh (s)	59.6	30.7	52.1	16.8	85.0	11.2	3.5	38.3	12.0	10.0	17.0
Vehicles Entered	2	6	52	61	9	266	28	55	422	22	923
Vehicles Exited	2	6	53	62	9	259	27	56	413	21	908
Hourly Exit Rate	8	24	212	248	36	1036	108	224	1652	84	3632
Input Volume	10	25	236	248	44	1103	120	226	1665	84	3761
% of Volume	80	96	90	100	82	94	90	99	99	100	97

11: Redwood Road & Aspen Hills Blvd Performance by movement Interval #2 5:15

Movement	EBL	EBR	WBL	WBR	NBL	NBT	NBR	SBL	SBT	SBR	All
Denied Delay (hr)	0.0	0.0	0.1	0.1	0.0	0.0	0.0	0.0	0.0	0.0	0.1
Denied Del/Veh (s)	2.6	2.5	3.5	3.4	0.0	0.0	0.0	0.0	0.0	0.0	0.5
Total Delay (hr)	0.0	0.0	1.2	0.4	0.3	1.1	0.0	0.7	1.5	0.1	5.5
Total Del/Veh (s)	73.3	22.2	62.8	22.0	99.3	13.0	4.3	44.1	12.6	10.3	19.4
Vehicles Entered	2	7	62	66	10	295	30	57	417	21	967
Vehicles Exited	2	7	64	66	10	298	31	54	408	20	960
Hourly Exit Rate	8	28	256	264	40	1192	124	216	1632	80	3840
Input Volume	10	26	253	265	47	1184	128	242	1786	89	4030
% of Volume	80	108	101	100	85	101	97	89	91	90	95

11: Redwood Road & Aspen Hills Blvd Performance by movement Interval #3 5:30

Movement	EBL	EBR	WBL	WBR	NBL	NBT	NBR	SBL	SBT	SBR	All
Denied Delay (hr)	0.0	0.0	0.1	0.1	0.0	0.0	0.0	0.0	0.0	0.0	0.1
Denied Del/Veh (s)	3.2	2.7	3.5	3.5	0.0	0.0	0.0	0.0	0.0	0.0	0.5
Total Delay (hr)	0.0	0.1	1.0	0.4	0.3	1.0	0.0	0.8	1.4	0.1	5.1
Total Del/Veh (s)	67.9	27.7	59.3	19.8	85.8	12.4	3.9	46.9	12.1	9.9	18.7
Vehicles Entered	2	6	55	63	10	281	28	59	398	21	923
Vehicles Exited	2	7	56	63	11	278	28	61	401	22	929
Hourly Exit Rate	8	28	224	252	44	1112	112	244	1604	88	3716
Input Volume	10	25	236	248	44	1103	120	226	1665	84	3761
% of Volume	80	112	95	102	100	101	93	108	96	105	99

11: Redwood Road & Aspen Hills Blvd Performance by movement Interval #4 5:45

Movement	EBL	EBR	WBL	WBR	NBL	NBT	NBR	SBL	SBT	SBR	All
Denied Delay (hr)	0.0	0.0	0.1	0.1	0.0	0.0	0.0	0.0	0.0	0.0	0.1
Denied Del/Veh (s)	3.4	2.3	3.5	3.4	0.0	0.0	0.0	0.0	0.0	0.0	0.5
Total Delay (hr)	0.0	0.0	1.1	0.3	0.2	0.8	0.0	0.6	1.3	0.1	4.4
Total Del/Veh (s)	73.5	20.4	59.5	16.4	63.7	9.9	3.3	40.9	11.2	10.4	16.8
Vehicles Entered	2	5	60	61	11	266	29	52	384	19	889
Vehicles Exited	2	5	61	61	12	270	29	54	395	19	908
Hourly Exit Rate	8	20	244	244	48	1080	116	216	1580	76	3632
Input Volume	10	25	236	248	44	1103	120	226	1665	84	3761
% of Volume	80	80	103	98	109	98	97	96	95	90	97

11: Redwood Road & Aspen Hills Blvd Performance by movement Entire Run

Movement	EBL	EBR	WBL	WBR	NBL	NBT	NBR	SBL	SBT	SBR	All
Denied Delay (hr)	0.0	0.0	0.2	0.2	0.0	0.0	0.0	0.0	0.0	0.0	0.5
Denied Del/Veh (s)	2.8	2.5	3.5	3.5	0.0	0.0	0.0	0.0	0.0	0.0	0.5
Total Delay (hr)	0.2	0.2	4.1	1.4	1.0	3.7	0.1	2.9	5.7	0.2	19.4
Total Del/Veh (s)	67.6	27.4	62.0	19.5	88.9	12.0	3.8	45.3	12.5	10.6	18.8
Vehicles Entered	9	24	229	250	41	1108	115	223	1622	83	3704
Vehicles Exited	9	24	234	252	41	1104	115	225	1617	82	3703
Hourly Exit Rate	9	24	234	252	41	1104	115	225	1617	82	3703
Input Volume	10	25	240	252	45	1123	122	230	1695	85	3828
% of Volume	90	95	97	100	92	98	94	98	95	96	97

13: Redwood Road & Sergeant Court Drive Performance by movement Interval #1 5:00

Movement	EBL	EBR	WBL	WBR	NBL	NBT	NBR	SBL	SBT	SBR	All
Denied Delay (hr)	0.0	0.0	0.0	0.0	0.0	0.0	0.0	0.0	0.0	0.0	0.0
Denied Del/Veh (s)	4.6	0.1	0.6	3.9	0.1	0.0	0.2	0.0	0.0	0.0	0.2
Total Delay (hr)	0.0	0.1	0.5	0.1	0.1	0.3	0.0	0.1	0.4	0.0	1.5
Total Del/Veh (s)	117.3	34.3	168.8	10.9	46.2	3.8	2.8	16.1	2.8	2.0	6.5
Vehicles Entered	1	6	9	33	5	283	20	30	436	6	829
Vehicles Exited	1	6	7	33	5	278	20	29	435	5	819
Hourly Exit Rate	4	24	28	132	20	1112	80	116	1740	20	3276
Input Volume	5	25	34	140	20	1161	95	118	1789	20	3407
% of Volume	80	96	82	94	100	96	84	98	97	100	96

13: Redwood Road & Sergeant Court Drive Performance by movement Interval #2 5:15

Movement	EBL	EBR	WBL	WBR	NBL	NBT	NBR	SBL	SBT	SBR	All
Denied Delay (hr)	0.0	0.0	0.0	0.0	0.0	0.0	0.0	0.0	0.0	0.0	0.0
Denied Del/Veh (s)	3.4	0.2	0.6	3.8	0.6	0.0	0.2	0.0	0.0	0.0	0.2
Total Delay (hr)	0.1	0.1	0.7	0.2	0.1	0.3	0.0	0.2	0.4	0.0	1.9
Total Del/Veh (s)	101.8	43.1	187.5	15.9	37.7	3.8	3.2	16.2	2.8	1.9	7.8
Vehicles Entered	2	6	11	36	5	312	22	32	442	5	873
Vehicles Exited	2	6	9	36	5	307	22	33	443	5	868
Hourly Exit Rate	8	24	36	144	20	1228	88	132	1772	20	3472
Input Volume	5	26	37	151	21	1243	102	126	1917	21	3649
% of Volume	160	92	97	95	95	99	86	105	92	95	95

13: Redwood Road & Sergeant Court Drive Performance by movement Interval #3 5:30

Movement	EBL	EBR	WBL	WBR	NBL	NBT	NBR	SBL	SBT	SBR	All
Denied Delay (hr)	0.0	0.0	0.0	0.0	0.0	0.0	0.0	0.0	0.0	0.0	0.0
Denied Del/Veh (s)	5.5	0.1	0.4	3.9	0.1	0.0	0.2	0.0	0.0	0.0	0.2
Total Delay (hr)	0.1	0.1	1.1	0.2	0.1	0.3	0.0	0.1	0.3	0.0	2.3
Total Del/Veh (s)	93.7	48.2	301.6	16.7	54.4	3.8	3.1	17.2	2.7	2.2	9.7
Vehicles Entered	1	6	9	36	6	284	24	29	430	4	829
Vehicles Exited	1	6	9	35	6	294	24	29	435	4	843
Hourly Exit Rate	4	24	36	140	24	1176	96	116	1740	16	3372
Input Volume	5	25	34	140	20	1161	95	118	1789	20	3407
% of Volume	80	96	106	100	120	101	101	98	97	80	99

13: Redwood Road & Sergeant Court Drive Performance by movement Interval #4 5:45

Movement	EBL	EBR	WBL	WBR	NBL	NBT	NBR	SBL	SBT	SBR	All
Denied Delay (hr)	0.0	0.0	0.0	0.0	0.0	0.0	0.0	0.0	0.0	0.0	0.0
Denied Del/Veh (s)	3.8	0.1	0.5	3.9	0.2	0.0	0.2	0.0	0.0	0.0	0.2
Total Delay (hr)	0.0	0.1	0.6	0.1	0.0	0.3	0.0	0.1	0.3	0.0	1.6
Total Del/Veh (s)	67.5	29.8	192.6	12.9	35.0	3.9	3.0	15.5	2.6	2.3	7.0
Vehicles Entered	1	7	7	32	4	285	22	29	427	5	819
Vehicles Exited	1	7	10	34	5	282	22	29	422	5	817
Hourly Exit Rate	4	28	40	136	20	1128	88	116	1688	20	3268
Input Volume	5	25	34	140	20	1161	95	118	1789	20	3407
% of Volume	80	112	118	97	100	97	93	98	94	100	96

13: Redwood Road & Sergeant Court Drive Performance by movement Entire Run

Movement	EBL	EBR	WBL	WBR	NBL	NBT	NBR	SBL	SBT	SBR	All
Denied Delay (hr)	0.0	0.0	0.0	0.1	0.0	0.0	0.0	0.0	0.0	0.0	0.2
Denied Del/Veh (s)	4.1	0.1	0.5	3.9	0.2	0.0	0.2	0.0	0.0	0.0	0.2
Total Delay (hr)	0.2	0.3	2.9	0.6	0.3	1.3	0.1	0.6	1.4	0.0	7.4
Total Del/Veh (s)	115.2	38.9	279.8	14.5	46.0	3.9	3.1	16.8	2.8	2.2	7.9
Vehicles Entered	5	25	36	137	20	1164	89	120	1735	20	3351
Vehicles Exited	5	25	36	138	20	1162	88	120	1735	20	3349
Hourly Exit Rate	5	25	36	138	20	1162	88	120	1735	20	3349
Input Volume	5	25	35	143	20	1182	97	120	1821	20	3468
% of Volume	100	99	104	97	99	98	91	100	95	99	97

19: 3600 West & 2100 North WB Performance by movement Interval #1 5:00

Movement	WBL	WBT	WBR	NBL	NBT	SBT	SBR	All
Denied Delay (hr)	0.0	0.0	0.0	0.0	0.0	0.0	0.0	0.1
Denied Del/Veh (s)	0.0	0.0	0.0	0.0	0.0	0.4	2.4	0.3
Total Delay (hr)	0.9	0.8	0.3	0.5	0.7	2.9	0.2	6.2
Total Del/Veh (s)	22.9	22.7	6.9	60.7	24.3	36.8	8.9	25.1
Vehicles Entered	136	122	142	28	100	274	62	864
Vehicles Exited	139	129	144	26	95	256	61	850
Hourly Exit Rate	556	516	576	104	380	1024	244	3400
Input Volume	509	482	599	113	388	1043	253	3387
% of Volume	109	107	96	92	98	98	96	100

19: 3600 West & 2100 North WB Performance by movement Interval #2 5:15

Movement	WBL	WBT	WBR	NBL	NBT	SBT	SBR	All
Denied Delay (hr)	0.0	0.0	0.0	0.0	0.0	0.0	0.0	0.1
Denied Del/Veh (s)	0.0	0.0	0.0	0.0	0.0	0.4	2.3	0.3
Total Delay (hr)	0.9	0.8	0.4	0.5	0.8	3.2	0.2	6.9
Total Del/Veh (s)	26.0	24.2	8.0	64.8	25.4	36.5	12.0	26.2
Vehicles Entered	122	124	168	26	101	289	66	896
Vehicles Exited	119	118	165	29	106	308	67	912
Hourly Exit Rate	476	472	660	116	424	1232	268	3648
Input Volume	545	516	642	121	416	1118	272	3630
% of Volume	87	91	103	96	102	110	99	100

19: 3600 West & 2100 North WB Performance by movement Interval #3 5:30

Movement	WBL	WBT	WBR	NBL	NBT	SBT	SBR	All
Denied Delay (hr)	0.0	0.0	0.0	0.0	0.0	0.0	0.0	0.1
Denied Del/Veh (s)	0.0	0.0	0.0	0.0	0.0	0.4	2.4	0.3
Total Delay (hr)	0.9	0.8	0.3	0.4	0.7	2.8	0.2	6.0
Total Del/Veh (s)	23.0	22.4	7.0	57.8	26.5	35.3	9.2	24.4
Vehicles Entered	129	119	157	28	94	270	65	862
Vehicles Exited	133	125	159	24	89	254	65	849
Hourly Exit Rate	532	500	636	96	356	1016	260	3396
Input Volume	509	482	599	113	388	1043	253	3387
% of Volume	105	104	106	85	92	97	103	100

19: 3600 West & 2100 North WB Performance by movement Interval #4 5:45

Movement	WBL	WBT	WBR	NBL	NBT	SBT	SBR	All
Denied Delay (hr)	0.0	0.0	0.0	0.0	0.0	0.0	0.0	0.1
Denied Del/Veh (s)	0.0	0.0	0.0	0.0	0.0	0.5	2.4	0.3
Total Delay (hr)	0.9	0.9	0.3	0.5	0.6	2.4	0.1	5.7
Total Del/Veh (s)	25.9	25.6	7.5	60.1	21.6	30.0	7.8	23.4
Vehicles Entered	124	122	150	25	93	258	64	836
Vehicles Exited	120	114	148	28	99	274	64	847
Hourly Exit Rate	480	456	592	112	396	1096	256	3388
Input Volume	509	482	599	113	388	1043	253	3387
% of Volume	94	95	99	99	102	105	101	100

19: 3600 West & 2100 North WB Performance by movement Entire Run

Movement	WBL	WBT	WBR	NBL	NBT	SBT	SBR	All
Denied Delay (hr)	0.0	0.0	0.0	0.0	0.0	0.1	0.2	0.3
Denied Del/Veh (s)	0.0	0.0	0.0	0.0	0.0	0.4	2.4	0.3
Total Delay (hr)	3.6	3.3	1.3	1.9	2.8	11.3	0.7	24.8
Total Del/Veh (s)	24.9	24.0	7.4	64.9	25.6	36.8	9.8	25.6
Vehicles Entered	511	486	616	107	388	1092	257	3457
Vehicles Exited	511	486	617	107	389	1092	257	3459
Hourly Exit Rate	511	486	617	107	389	1092	257	3459
Input Volume	518	490	610	115	395	1062	258	3448
% of Volume	99	99	101	93	98	103	100	100

20: 3600 West & 2100 North EB Performance by movement Interval #1 5:00

Movement	EBL	EBT	EBR	NBT	NBR	SBL	SBT	All
Denied Delay (hr)	0.0	0.0	0.0	0.0	0.0	0.0	0.0	0.0
Denied Del/Veh (s)	0.0	0.0	0.0	0.2	0.2	0.0	0.0	0.0
Total Delay (hr)	0.5	1.3	0.2	0.8	1.2	2.5	0.2	6.6
Total Del/Veh (s)	29.0	23.5	7.2	39.1	41.6	36.5	3.7	25.4
Vehicles Entered	65	202	81	61	88	232	164	893
Vehicles Exited	62	199	80	66	93	237	161	898
Hourly Exit Rate	248	796	320	264	372	948	644	3592
Input Volume	246	836	328	255	344	982	570	3561
% of Volume	101	95	98	104	108	97	113	101

20: 3600 West & 2100 North EB Performance by movement Interval #2 5:15

Movement	EBL	EBT	EBR	NBT	NBR	SBL	SBT	All
Denied Delay (hr)	0.0	0.0	0.0	0.0	0.0	0.0	0.0	0.0
Denied Del/Veh (s)	0.0	0.0	0.0	0.2	0.2	0.0	0.0	0.0
Total Delay (hr)	0.5	1.5	0.2	0.9	1.5	2.7	0.2	7.7
Total Del/Veh (s)	29.8	25.2	7.1	46.5	55.7	34.6	5.0	28.1
Vehicles Entered	62	210	87	68	93	276	151	947
Vehicles Exited	65	215	88	62	86	270	153	939
Hourly Exit Rate	260	860	352	248	344	1080	612	3756
Input Volume	263	895	352	274	368	1053	611	3816
% of Volume	99	96	100	91	93	103	100	98

20: 3600 West & 2100 North EB Performance by movement Interval #3 5:30

Movement	EBL	EBT	EBR	NBT	NBR	SBL	SBT	All
Denied Delay (hr)	0.0	0.0	0.0	0.0	0.0	0.0	0.0	0.0
Denied Del/Veh (s)	0.0	0.0	0.0	0.2	0.2	0.0	0.0	0.0
Total Delay (hr)	0.5	1.4	0.2	0.8	1.0	2.5	0.2	6.6
Total Del/Veh (s)	29.2	24.1	7.0	40.2	38.7	37.3	4.4	25.7
Vehicles Entered	57	208	84	61	83	230	157	880
Vehicles Exited	55	203	83	68	91	237	155	892
Hourly Exit Rate	220	812	332	272	364	948	620	3568
Input Volume	246	836	328	255	344	982	570	3561
% of Volume	89	97	101	107	106	97	109	100

20: 3600 West & 2100 North EB Performance by movement Interval #4 5:45

Movement	EBL	EBT	EBR	NBT	NBR	SBL	SBT	All
Denied Delay (hr)	0.0	0.0	0.0	0.0	0.0	0.0	0.0	0.0
Denied Del/Veh (s)	0.0	0.0	0.0	0.2	0.2	0.0	0.0	0.0
Total Delay (hr)	0.5	1.6	0.1	0.9	1.0	2.0	0.2	6.3
Total Del/Veh (s)	32.2	26.0	6.5	46.4	37.2	28.4	4.2	24.5
Vehicles Entered	56	208	76	62	90	246	148	886
Vehicles Exited	59	213	77	59	84	240	150	882
Hourly Exit Rate	236	852	308	236	336	960	600	3528
Input Volume	246	836	328	255	344	982	570	3561
% of Volume	96	102	94	93	98	98	105	99

20: 3600 West & 2100 North EB Performance by movement Entire Run

Movement	EBL	EBT	EBR	NBT	NBR	SBL	SBT	All
Denied Delay (hr)	0.0	0.0	0.0	0.0	0.0	0.0	0.0	0.0
Denied Del/Veh (s)	0.0	0.0	0.0	0.2	0.2	0.0	0.0	0.0
Total Delay (hr)	2.1	5.8	0.6	3.3	4.7	9.8	0.8	27.1
Total Del/Veh (s)	30.8	25.3	7.0	46.0	46.5	35.2	4.4	26.8
Vehicles Entered	241	829	328	253	354	983	620	3608
Vehicles Exited	241	829	328	254	354	983	619	3608
Hourly Exit Rate	241	829	328	254	354	983	619	3608
Input Volume	250	851	334	260	350	1000	580	3625
% of Volume	96	97	98	98	101	98	107	100

22: 2100 North WB Performance by movement Interval #1 5:00

Movement	WBL	WBT	All
Denied Delay (hr)	0.0	0.1	0.1
Denied Del/Veh (s)	1.6	1.0	1.1
Total Delay (hr)	0.1	2.0	2.1
Total Del/Veh (s)	5.4	17.3	15.5
Vehicles Entered	69	390	459
Vehicles Exited	69	399	468
Hourly Exit Rate	276	1596	1872
Input Volume	270	1590	1860
% of Volume	102	100	101

22: 2100 North WB Performance by movement Interval #2 5:15

Movement	WBL	WBT	All
Denied Delay (hr)	0.0	0.1	0.2
Denied Del/Veh (s)	1.6	1.0	1.1
Total Delay (hr)	0.1	1.9	2.0
Total Del/Veh (s)	5.5	15.6	14.1
Vehicles Entered	73	422	495
Vehicles Exited	74	414	488
Hourly Exit Rate	296	1656	1952
Input Volume	289	1703	1992
% of Volume	102	97	98

22: 2100 North WB Performance by movement Interval #3 5:30

Movement	WBL	WBT	All
Denied Delay (hr)	0.0	0.1	0.1
Denied Del/Veh (s)	1.6	1.0	1.1
Total Delay (hr)	0.1	1.7	1.8
Total Del/Veh (s)	4.4	14.4	12.9
Vehicles Entered	71	396	467
Vehicles Exited	71	405	476
Hourly Exit Rate	284	1620	1904
Input Volume	270	1590	1860
% of Volume	105	102	102

22: 2100 North WB Performance by movement Interval #4 5:45

Movement	WBL	WBT	All
Denied Delay (hr)	0.0	0.1	0.1
Denied Del/Veh (s)	1.6	1.0	1.1
Total Delay (hr)	0.1	1.7	1.7
Total Del/Veh (s)	4.0	14.3	12.9
Vehicles Entered	65	405	470
Vehicles Exited	65	395	460
Hourly Exit Rate	260	1580	1840
Input Volume	270	1590	1860
% of Volume	96	99	99

22: 2100 North WB Performance by movement Entire Run

Movement	WBL	WBT	All
Denied Delay (hr)	0.1	0.4	0.6
Denied Del/Veh (s)	1.6	1.0	1.1
Total Delay (hr)	0.4	7.2	7.6
Total Del/Veh (s)	5.0	15.9	14.3
Vehicles Entered	278	1612	1890
Vehicles Exited	278	1613	1891
Hourly Exit Rate	278	1613	1891
Input Volume	275	1618	1893
% of Volume	101	100	100

23: 2100 North EB Performance by movement Interval #1 5:00

Movement	EBT	SEL	All
Denied Delay (hr)	0.0	0.0	0.0
Denied Del/Veh (s)	0.0	0.0	0.0
Total Delay (hr)	0.3	0.4	0.7
Total Del/Veh (s)	2.0	21.4	4.3
Vehicles Entered	528	69	597
Vehicles Exited	528	71	599
Hourly Exit Rate	2112	284	2396
Input Volume	2162	270	2432
% of Volume	98	105	99

23: 2100 North EB Performance by movement Interval #2 5:15

Movement	EBT	SEL	All
Denied Delay (hr)	0.0	0.0	0.0
Denied Del/Veh (s)	0.0	0.0	0.0
Total Delay (hr)	0.3	0.6	1.0
Total Del/Veh (s)	2.1	30.2	5.3
Vehicles Entered	571	74	645
Vehicles Exited	571	69	640
Hourly Exit Rate	2284	276	2560
Input Volume	2316	289	2605
% of Volume	99	96	98

23: 2100 North EB Performance by movement Interval #3 5:30

Movement	EBT	SEL	All
Denied Delay (hr)	0.0	0.0	0.0
Denied Del/Veh (s)	0.0	0.0	0.0
Total Delay (hr)	0.3	0.6	0.9
Total Del/Veh (s)	2.1	26.3	5.1
Vehicles Entered	531	71	602
Vehicles Exited	531	76	607
Hourly Exit Rate	2124	304	2428
Input Volume	2162	270	2432
% of Volume	98	113	100

23: 2100 North EB Performance by movement Interval #4 5:45

Movement	EBT	SEL	All
Denied Delay (hr)	0.0	0.0	0.0
Denied Del/Veh (s)	0.0	0.0	0.0
Total Delay (hr)	0.3	0.4	0.7
Total Del/Veh (s)	2.0	20.5	4.0
Vehicles Entered	536	65	601
Vehicles Exited	535	62	597
Hourly Exit Rate	2140	248	2388
Input Volume	2162	270	2432
% of Volume	99	92	98

23: 2100 North EB Performance by movement Entire Run

Movement	EBT	SEL	All
Denied Delay (hr)	0.0	0.0	0.0
Denied Del/Veh (s)	0.0	0.0	0.0
Total Delay (hr)	1.3	2.0	3.3
Total Del/Veh (s)	2.1	25.5	4.8
Vehicles Entered	2166	278	2444
Vehicles Exited	2166	278	2444
Hourly Exit Rate	2166	278	2444
Input Volume	2200	275	2475
% of Volume	98	101	99

24: 2100 North EB Performance by movement Interval #1 5:00

Movement	EBL	EBT	All
Denied Delay (hr)	0.0	0.1	0.2
Denied Del/Veh (s)	1.8	1.2	1.3
Total Delay (hr)	0.3	1.4	1.6
Total Del/Veh (s)	14.2	13.5	13.6
Vehicles Entered	72	341	413
Vehicles Exited	72	349	421
Hourly Exit Rate	288	1396	1684
Input Volume	295	1409	1704
% of Volume	98	99	99

24: 2100 North EB Performance by movement Interval #2 5:15

Movement	EBL	EBT	All
Denied Delay (hr)	0.0	0.1	0.2
Denied Del/Veh (s)	1.8	1.2	1.3
Total Delay (hr)	0.4	1.8	2.2
Total Del/Veh (s)	17.5	16.6	16.8
Vehicles Entered	80	367	447
Vehicles Exited	78	360	438
Hourly Exit Rate	312	1440	1752
Input Volume	316	1509	1825
% of Volume	99	95	96

24: 2100 North EB Performance by movement Interval #3 5:30

Movement	EBL	EBT	All
Denied Delay (hr)	0.0	0.1	0.2
Denied Del/Veh (s)	1.9	1.2	1.3
Total Delay (hr)	0.3	1.4	1.6
Total Del/Veh (s)	12.4	13.7	13.5
Vehicles Entered	74	342	416
Vehicles Exited	75	348	423
Hourly Exit Rate	300	1392	1692
Input Volume	295	1409	1704
% of Volume	102	99	99

24: 2100 North EB Performance by movement Interval #4 5:45

Movement	EBL	EBT	All
Denied Delay (hr)	0.0	0.1	0.1
Denied Del/Veh (s)	1.9	1.1	1.2
Total Delay (hr)	0.3	1.6	1.9
Total Del/Veh (s)	15.1	16.0	15.9
Vehicles Entered	68	344	412
Vehicles Exited	69	340	409
Hourly Exit Rate	276	1360	1636
Input Volume	295	1409	1704
% of Volume	94	97	96

24: 2100 North EB Performance by movement Entire Run

Movement	EBL	EBT	All
Denied Delay (hr)	0.2	0.5	0.6
Denied Del/Veh (s)	1.8	1.2	1.3
Total Delay (hr)	1.3	6.1	7.3
Total Del/Veh (s)	15.4	15.5	15.4
Vehicles Entered	294	1395	1689
Vehicles Exited	294	1397	1691
Hourly Exit Rate	294	1397	1691
Input Volume	300	1434	1734
% of Volume	98	97	98

25: 2100 North WB Performance by movement Interval #1 5:00

Movement	WBT	NWL	All
Denied Delay (hr)	0.0	0.0	0.0
Denied Del/Veh (s)	0.0	0.0	0.0
Total Delay (hr)	0.1	0.2	0.3
Total Del/Veh (s)	2.0	9.0	3.8
Vehicles Entered	215	72	287
Vehicles Exited	216	72	288
Hourly Exit Rate	864	288	1152
Input Volume	848	295	1143
% of Volume	102	98	101

25: 2100 North WB Performance by movement Interval #2 5:15

Movement	WBT	NWL	All
Denied Delay (hr)	0.0	0.0	0.0
Denied Del/Veh (s)	0.0	0.0	0.0
Total Delay (hr)	0.1	0.2	0.4
Total Del/Veh (s)	2.0	10.7	4.3
Vehicles Entered	215	78	293
Vehicles Exited	215	76	291
Hourly Exit Rate	860	304	1164
Input Volume	910	316	1226
% of Volume	95	96	95

25: 2100 North WB Performance by movement Interval #3 5:30

Movement	WBT	NWL	All
Denied Delay (hr)	0.0	0.0	0.0
Denied Del/Veh (s)	0.0	0.0	0.0
Total Delay (hr)	0.1	0.2	0.3
Total Del/Veh (s)	1.9	8.6	3.7
Vehicles Entered	214	75	289
Vehicles Exited	214	77	291
Hourly Exit Rate	856	308	1164
Input Volume	848	295	1143
% of Volume	101	104	102

25: 2100 North WB Performance by movement Interval #4 5:45

Movement	WBT	NWL	All
Denied Delay (hr)	0.0	0.0	0.0
Denied Del/Veh (s)	0.0	0.0	0.0
Total Delay (hr)	0.1	0.2	0.3
Total Del/Veh (s)	1.8	9.2	3.7
Vehicles Entered	206	69	275
Vehicles Exited	206	68	274
Hourly Exit Rate	824	272	1096
Input Volume	848	295	1143
% of Volume	97	92	96

25: 2100 North WB Performance by movement Entire Run

Movement	WBT	NWL	All
Denied Delay (hr)	0.0	0.0	0.0
Denied Del/Veh (s)	0.0	0.0	0.0
Total Delay (hr)	0.5	0.8	1.3
Total Del/Veh (s)	1.9	9.6	3.9
Vehicles Entered	850	294	1144
Vehicles Exited	851	294	1145
Hourly Exit Rate	851	294	1145
Input Volume	864	300	1164
% of Volume	99	98	98

31: 400 East & Crossroads Blvd Performance by movement Interval #1 5:00

Movement	EBL	EBT	EBR	WBL	WBT	WBR	NBL	NBT	NBR	SBL	SBT	SBR
Denied Delay (hr)	0.0	0.0	0.0	0.0	0.0	0.0	0.0	0.0	0.0	0.0	0.0	0.0
Denied Del/Veh (s)	0.0	0.0	0.0	1.9	0.3	1.8	4.0	0.5	4.0	4.0	0.4	3.8
Total Delay (hr)	0.1	0.3	0.0	0.2	0.6	0.0	0.1	0.0	0.0	0.1	0.1	0.1
Total Del/Veh (s)	16.8	4.5	1.5	25.6	9.1	2.4	41.4	44.3	8.0	42.1	38.9	7.9
Vehicles Entered	16	190	8	22	224	21	7	2	12	11	10	25
Vehicles Exited	16	195	8	22	222	20	7	2	12	12	10	25
Hourly Exit Rate	64	780	32	88	888	80	28	8	48	48	40	100
Input Volume	65	767	34	84	909	77	25	10	44	48	39	100
% of Volume	98	102	94	105	98	104	112	80	109	100	103	100

31: 400 East & Crossroads Blvd Performance by movement Interval #1 5:00

Movement	All
Denied Delay (hr)	0.1
Denied Del/Veh (s)	0.7
Total Delay (hr)	1.6
Total Del/Veh (s)	9.7
Vehicles Entered	548
Vehicles Exited	551
Hourly Exit Rate	2204
Input Volume	2202
% of Volume	100

31: 400 East & Crossroads Blvd Performance by movement Interval #2 5:15

Movement	EBL	EBT	EBR	WBL	WBT	WBR	NBL	NBT	NBR	SBL	SBT	SBR
Denied Delay (hr)	0.0	0.0	0.0	0.0	0.0	0.0	0.0	0.0	0.0	0.0	0.0	0.0
Denied Del/Veh (s)	0.0	0.0	0.0	1.8	0.3	1.8	4.2	0.2	4.0	3.7	0.5	3.8
Total Delay (hr)	0.1	0.3	0.0	0.2	0.7	0.0	0.1	0.0	0.0	0.1	0.1	0.1
Total Del/Veh (s)	19.7	4.6	2.5	25.7	10.2	2.7	40.4	29.4	6.2	39.6	39.2	9.8
Vehicles Entered	17	201	11	20	241	18	7	3	13	13	11	28
Vehicles Exited	19	207	12	20	246	18	7	3	12	11	10	27
Hourly Exit Rate	76	828	48	80	984	72	28	12	48	44	40	108
Input Volume	69	822	37	89	974	82	26	11	47	52	42	107
% of Volume	110	101	130	90	101	88	108	109	102	85	95	101

31: 400 East & Crossroads Blvd Performance by movement Interval #2 5:15

Movement	All
Denied Delay (hr)	0.1
Denied Del/Veh (s)	0.7
Total Delay (hr)	1.8
Total Del/Veh (s)	10.3
Vehicles Entered	583
Vehicles Exited	592
Hourly Exit Rate	2368
Input Volume	2358
% of Volume	100

31: 400 East & Crossroads Blvd Performance by movement Interval #3 5:30

Movement	EBL	EBT	EBR	WBL	WBT	WBR	NBL	NBT	NBR	SBL	SBT	SBR
Denied Delay (hr)	0.0	0.0	0.0	0.0	0.0	0.0	0.0	0.0	0.0	0.0	0.0	0.0
Denied Del/Veh (s)	0.0	0.0	0.0	1.9	0.3	1.8	4.0	0.1	3.9	3.8	0.6	4.0
Total Delay (hr)	0.1	0.2	0.0	0.2	0.7	0.0	0.1	0.0	0.0	0.1	0.1	0.1
Total Del/Veh (s)	21.1	4.5	2.5	32.8	10.0	2.7	33.5	32.9	8.9	35.5	30.4	7.4
Vehicles Entered	17	194	8	22	233	20	5	4	11	12	10	24
Vehicles Exited	16	192	8	22	234	20	5	4	11	13	10	24
Hourly Exit Rate	64	768	32	88	936	80	20	16	44	52	40	96
Input Volume	65	767	34	84	909	77	25	10	44	48	39	100
% of Volume	98	100	94	105	103	104	80	160	100	108	103	96

31: 400 East & Crossroads Blvd Performance by movement Interval #3 5:30

Movement	All
Denied Delay (hr)	0.1
Denied Del/Veh (s)	0.6
Total Delay (hr)	1.6
Total Del/Veh (s)	10.3
Vehicles Entered	560
Vehicles Exited	559
Hourly Exit Rate	2236
Input Volume	2202
% of Volume	102

31: 400 East & Crossroads Blvd Performance by movement Interval #4 5:45

Movement	EBL	EBT	EBR	WBL	WBT	WBR	NBL	NBT	NBR	SBL	SBT	SBR
Denied Delay (hr)	0.0	0.0	0.0	0.0	0.0	0.0	0.0	0.0	0.0	0.0	0.0	0.0
Denied Del/Veh (s)	0.0	0.0	0.0	1.9	0.3	1.8	4.3	0.4	3.9	4.0	0.5	3.8
Total Delay (hr)	0.1	0.2	0.0	0.2	0.7	0.0	0.1	0.0	0.0	0.2	0.1	0.1
Total Del/Veh (s)	16.9	4.5	2.3	26.9	10.4	2.8	41.7	28.0	6.8	36.5	36.6	7.3
Vehicles Entered	16	193	9	23	232	20	6	2	12	13	10	27
Vehicles Exited	16	189	9	22	229	21	7	2	12	13	9	26
Hourly Exit Rate	64	756	36	88	916	84	28	8	48	52	36	104
Input Volume	65	767	34	84	909	77	25	10	44	48	39	100
% of Volume	98	99	106	105	101	109	112	80	109	108	92	104

31: 400 East & Crossroads Blvd Performance by movement Interval #4 5:45

Movement	All
Denied Delay (hr)	0.1
Denied Del/Veh (s)	0.7
Total Delay (hr)	1.7
Total Del/Veh (s)	10.3
Vehicles Entered	563
Vehicles Exited	555
Hourly Exit Rate	2220
Input Volume	2202
% of Volume	101

31: 400 East & Crossroads Blvd Performance by movement Entire Run

Movement	EBL	EBT	EBR	WBL	WBT	WBR	NBL	NBT	NBR	SBL	SBT	SBR
Denied Delay (hr)	0.0	0.0	0.0	0.0	0.1	0.0	0.0	0.0	0.1	0.1	0.0	0.1
Denied Del/Veh (s)	0.0	0.0	0.0	1.9	0.3	1.8	3.9	0.3	4.0	3.9	0.5	3.9
Total Delay (hr)	0.4	1.0	0.0	0.7	2.7	0.1	0.3	0.1	0.1	0.6	0.4	0.2
Total Del/Veh (s)	19.7	4.6	2.2	29.3	10.3	2.7	42.5	35.7	7.6	41.3	38.0	8.3
Vehicles Entered	67	778	36	87	930	79	26	11	47	49	40	104
Vehicles Exited	67	784	36	87	932	79	26	11	47	48	39	104
Hourly Exit Rate	67	784	36	87	932	79	26	11	47	48	39	104
Input Volume	66	781	35	85	925	78	25	10	45	49	40	102
% of Volume	102	100	104	102	101	101	103	107	105	98	98	102

31: 400 East & Crossroads Blvd Performance by movement Entire Run

Movement	All
Denied Delay (hr)	0.4
Denied Del/Veh (s)	0.7
Total Delay (hr)	6.6
Total Del/Veh (s)	10.4
Vehicles Entered	2254
Vehicles Exited	2260
Hourly Exit Rate	2260
Input Volume	2241
% of Volume	101

34: Crossroads Blvd Performance by movement Interval #1 5:00

Movement	EBT	EBR	WBT	All
Denied Delay (hr)	0.0	0.0	0.0	0.0
Denied Del/Veh (s)	0.0	0.0	0.0	0.0
Total Delay (hr)	0.2	0.0	0.2	0.4
Total Del/Veh (s)	2.7	1.2	3.1	2.9
Vehicles Entered	218	5	255	478
Vehicles Exited	215	5	261	481
Hourly Exit Rate	860	20	1044	1924
Input Volume	867	20	1034	1921
% of Volume	99	100	101	100

34: Crossroads Blvd Performance by movement Interval #2 5:15

Movement	EBT	EBR	WBT	All
Denied Delay (hr)	0.0	0.0	0.0	0.0
Denied Del/Veh (s)	0.0	0.0	0.0	0.0
Total Delay (hr)	0.2	0.0	0.3	0.4
Total Del/Veh (s)	2.6	1.2	3.3	2.9
Vehicles Entered	227	6	281	514
Vehicles Exited	229	5	276	510
Hourly Exit Rate	916	20	1104	2040
Input Volume	927	21	1107	2055
% of Volume	99	95	100	99

34: Crossroads Blvd Performance by movement Interval #3 5:30

Movement	EBT	EBR	WBT	All
Denied Delay (hr)	0.0	0.0	0.0	0.0
Denied Del/Veh (s)	0.0	0.0	0.0	0.0
Total Delay (hr)	0.2	0.0	0.2	0.4
Total Del/Veh (s)	2.7	1.1	3.0	2.9
Vehicles Entered	212	5	264	481
Vehicles Exited	219	5	262	486
Hourly Exit Rate	876	20	1048	1944
Input Volume	867	20	1034	1921
% of Volume	101	100	101	101

34: Crossroads Blvd Performance by movement Interval #4 5:45

Movement	EBT	EBR	WBT	All
Denied Delay (hr)	0.0	0.0	0.0	0.0
Denied Del/Veh (s)	0.0	0.0	0.0	0.0
Total Delay (hr)	0.2	0.0	0.2	0.4
Total Del/Veh (s)	2.6	1.6	3.1	2.8
Vehicles Entered	219	6	262	487
Vehicles Exited	219	6	256	481
Hourly Exit Rate	876	24	1024	1924
Input Volume	867	20	1034	1921
% of Volume	101	120	99	100

34: Crossroads Blvd Performance by movement Entire Run

Movement	EBT	EBR	WBT	All
Denied Delay (hr)	0.0	0.0	0.0	0.0
Denied Del/Veh (s)	0.0	0.0	0.0	0.0
Total Delay (hr)	0.7	0.0	1.0	1.6
Total Del/Veh (s)	2.7	1.4	3.2	3.0
Vehicles Entered	875	21	1062	1958
Vehicles Exited	882	21	1055	1958
Hourly Exit Rate	882	21	1055	1958
Input Volume	882	20	1052	1954
% of Volume	100	104	100	100

38: Performance by movement Interval #1 5:00

Movement	EBL	EBT	EBR	WBL	WBT	WBR	NBL	NBT	NBR	SBL	SBT	SBR
Denied Delay (hr)	0.0	0.0	0.1	0.0	0.0	0.0	0.0	0.0	0.0	0.0	0.1	0.0
Denied Del/Veh (s)	0.5	0.5	2.9	3.8	0.8	3.8	0.0	0.0	0.0	1.5	0.5	1.6
Total Delay (hr)	3.9	0.3	0.5	0.4	0.2	0.1	1.1	1.2	0.1	0.5	4.5	0.5
Total Del/Veh (s)	218.6	41.4	28.5	54.3	49.9	10.5	42.4	18.7	17.7	46.4	36.6	18.3
Vehicles Entered	58	22	63	23	18	38	82	219	23	35	402	92
Vehicles Exited	37	21	62	21	16	38	84	227	23	36	416	93
Hourly Exit Rate	148	84	248	84	64	152	336	908	92	144	1664	372
Input Volume	241	74	236	93	74	147	349	919	93	147	1646	373
% of Volume	61	114	105	90	86	103	96	99	99	98	101	100

38: Performance by movement Interval #1 5:00

Movement	All
Denied Delay (hr)	0.2
Denied Del/Veh (s)	0.8
Total Delay (hr)	13.3
Total Del/Veh (s)	41.3
Vehicles Entered	1075
Vehicles Exited	1074
Hourly Exit Rate	4296
Input Volume	4392
% of Volume	98

38: Performance by movement Interval #2 5:15

Movement	EBL	EBT	EBR	WBL	WBT	WBR	NBL	NBT	NBR	SBL	SBT	SBR
Denied Delay (hr)	1.1	0.3	1.0	0.0	0.0	0.0	0.0	0.0	0.0	0.0	0.1	0.0
Denied Del/Veh (s)	57.9	61.2	60.9	3.8	0.8	3.6	0.0	0.0	0.0	1.7	0.5	1.6
Total Delay (hr)	9.1	0.3	0.7	0.5	0.3	0.2	1.3	1.6	0.1	0.8	6.3	0.7
Total Del/Veh (s)	399.2	68.9	49.8	58.0	46.6	14.9	47.5	21.6	18.9	62.9	49.4	23.9
Vehicles Entered	55	14	47	25	23	44	92	248	25	40	441	98
Vehicles Exited	38	13	44	25	22	44	89	248	25	40	426	94
Hourly Exit Rate	152	52	176	100	88	176	356	992	100	160	1704	376
Input Volume	258	79	253	100	79	158	374	984	100	158	1763	400
% of Volume	59	66	70	100	111	111	95	101	100	101	97	94

38: Performance by movement Interval #2 5:15

Movement	All
Denied Delay (hr)	2.7
Denied Del/Veh (s)	8.2
Total Delay (hr)	21.8
Total Del/Veh (s)	63.2
Vehicles Entered	1152
Vehicles Exited	1108
Hourly Exit Rate	4432
Input Volume	4706
% of Volume	94

38: Performance by movement Interval #3 5:30

Movement	EBL	EBT	EBR	WBL	WBT	WBR	NBL	NBT	NBR	SBL	SBT	SBR
Denied Delay (hr)	6.2	1.9	6.0	0.0	0.0	0.0	0.0	0.0	0.0	0.0	0.1	0.0
Denied Del/Veh (s)	293.6	290.0	286.7	3.6	0.9	3.7	0.0	0.0	0.0	1.7	0.5	1.5
Total Delay (hr)	10.7	0.6	1.5	0.4	0.3	0.1	1.3	1.5	0.1	0.7	6.9	0.8
Total Del/Veh (s)	447.6	133.8	114.5	53.7	51.5	12.0	47.9	22.0	18.5	64.0	55.6	31.8
Vehicles Entered	41	13	41	24	18	38	85	236	22	37	408	87
Vehicles Exited	40	12	40	25	19	38	91	242	22	35	414	89
Hourly Exit Rate	160	48	160	100	76	152	364	968	88	140	1656	356
Input Volume	241	74	236	93	74	147	349	919	93	147	1646	373
% of Volume	66	65	68	108	103	103	104	105	95	95	101	95

38: Performance by movement Interval #3 5:30

Movement	All
Denied Delay (hr)	14.3
Denied Del/Veh (s)	45.5
Total Delay (hr)	24.9
Total Del/Veh (s)	75.8
Vehicles Entered	1050
Vehicles Exited	1067
Hourly Exit Rate	4268
Input Volume	4392
% of Volume	97

38: Performance by movement Interval #4 5:45

Movement	EBL	EBT	EBR	WBL	WBT	WBR	NBL	NBT	NBR	SBL	SBT	SBR
Denied Delay (hr)	12.2	3.2	11.7	0.0	0.0	0.0	0.0	0.0	0.0	0.0	0.1	0.0
Denied Del/Veh (s)	454.5	422.3	459.3	3.6	0.7	3.6	0.0	0.0	0.0	1.6	0.5	1.5
Total Delay (hr)	10.7	0.5	1.3	0.4	0.3	0.1	1.1	1.3	0.1	0.6	4.3	0.4
Total Del/Veh (s)	452.0	127.1	102.6	52.6	52.9	11.2	44.1	19.6	17.4	48.3	35.8	16.1
Vehicles Entered	39	11	38	23	18	36	81	227	25	40	403	88
Vehicles Exited	40	12	37	24	19	35	82	226	25	39	394	87
Hourly Exit Rate	160	48	148	96	76	140	328	904	100	156	1576	348
Input Volume	241	74	236	93	74	147	349	919	93	147	1646	373
% of Volume	66	65	63	103	103	95	94	98	108	106	96	93

38: Performance by movement Interval #4 5:45

Movement	All
Denied Delay (hr)	27.3
Denied Del/Veh (s)	85.0
Total Delay (hr)	21.0
Total Del/Veh (s)	66.3
Vehicles Entered	1029
Vehicles Exited	1020
Hourly Exit Rate	4080
Input Volume	4392
% of Volume	93

38: Performance by movement Entire Run

Movement	EBL	EBT	EBR	WBL	WBT	WBR	NBL	NBT	NBR	SBL	SBT	SBR
Denied Delay (hr)	19.6	5.4	18.8	0.1	0.0	0.2	0.0	0.0	0.0	0.1	0.2	0.2
Denied Del/Veh (s)	280.8	259.7	278.7	3.7	0.8	3.7	0.0	0.0	0.0	1.6	0.5	1.5
Total Delay (hr)	34.4	1.6	4.0	1.6	1.2	0.5	4.7	5.6	0.5	2.6	22.0	2.4
Total Del/Veh (s)	619.3	97.1	75.4	59.9	54.6	12.5	48.7	21.1	18.7	59.7	46.8	23.5
Vehicles Entered	193	59	189	94	77	156	339	931	95	152	1654	364
Vehicles Exited	155	57	183	94	76	155	345	944	95	150	1650	364
Hourly Exit Rate	155	57	183	94	76	155	345	944	95	150	1650	364
Input Volume	245	75	240	95	75	150	355	935	95	150	1675	380
% of Volume	63	76	76	99	101	104	97	101	100	100	98	96

38: Performance by movement Entire Run

Movement	All
Denied Delay (hr)	44.5
Denied Del/Veh (s)	36.2
Total Delay (hr)	81.1
Total Del/Veh (s)	66.5
Vehicles Entered	4303
Vehicles Exited	4268
Hourly Exit Rate	4268
Input Volume	4470
% of Volume	95

Total Network Performance By Interval

Interval Start	5:00	5:15	5:30	5:45	All
Denied Delay (hr)	1.1	3.7	15.2	28.2	48.2
Denied Del/Veh (s)	1.3	3.8	16.6	30.6	13.1
Total Delay (hr)	56.7	72.1	70.6	63.7	263.1
Total Del/Veh (s)	54.1	64.6	65.8	60.7	69.3
Vehicles Entered	3237	3477	3225	3194	13141
Vehicles Exited	3234	3377	3278	3190	13080
Hourly Exit Rate	12936	13508	13112	12760	13080
Input Volume	50743	54358	50743	50743	51647
% of Volume	25	25	26	25	25

Intersection: 2: Redwood Road & Crossroads Blvd, Interval #1

Movement	EB	EB	EB	EB	EB	EB	WB	WB	WB	WB	WB	WB
Directions Served	L	L	T	T	T	R	L	L	T	T	T	R
Maximum Queue (ft)	109	131	162	155	111	31	161	185	164	155	144	76
Average Queue (ft)	56	86	116	97	33	9	99	122	92	89	83	38
95th Queue (ft)	108	138	169	155	109	28	168	196	177	162	156	74
Link Distance (ft)			1586	1586					901	901		
Upstream Blk Time (%)												
Queuing Penalty (veh)												
Storage Bay Dist (ft)	700	700			500	500	220	220			340	340
Storage Blk Time (%)								0	1			
Queuing Penalty (veh)								0	2			

Intersection: 2: Redwood Road & Crossroads Blvd, Interval #1

Movement	NB	NB	NB	NB	NB	SB	SB	SB	SB	SB
Directions Served	L	L	T	T	R	L	L	T	T	R
Maximum Queue (ft)	129	177	238	224	76	139	158	265	288	56
Average Queue (ft)	72	122	178	152	45	90	103	179	201	33
95th Queue (ft)	148	183	266	244	83	148	164	298	312	62
Link Distance (ft)			1242	1242				1013	1013	1013
Upstream Blk Time (%)										
Queuing Penalty (veh)										
Storage Bay Dist (ft)	200	200			300	450	450			
Storage Blk Time (%)		0	5							
Queuing Penalty (veh)		0	11							

Intersection: 2: Redwood Road & Crossroads Blvd, Interval #2

Movement	EB	EB	EB	EB	EB	EB	WB	WB	WB	WB	WB	WB
Directions Served	L	L	T	T	T	R	L	L	T	T	T	R
Maximum Queue (ft)	117	148	156	140	95	31	195	213	163	159	154	79
Average Queue (ft)	66	94	108	93	31	8	133	152	96	99	90	43
95th Queue (ft)	119	155	167	153	101	31	239	253	163	160	161	81
Link Distance (ft)			1586	1586					901	901		
Upstream Blk Time (%)												
Queuing Penalty (veh)												
Storage Bay Dist (ft)	700	700			500	500	220	220			340	340
Storage Blk Time (%)							2	6				
Queuing Penalty (veh)							3	10				

Intersection: 2: Redwood Road & Crossroads Blvd, Interval #2

Movement	NB	NB	NB	NB	NB	SB	SB	SB	SB	SB
Directions Served	L	L	T	T	R	L	L	T	T	R
Maximum Queue (ft)	177	213	311	286	95	147	168	325	320	68
Average Queue (ft)	96	144	213	186	49	95	114	209	223	37
95th Queue (ft)	196	226	317	297	90	165	187	332	333	70
Link Distance (ft)			1242	1242				1013	1013	1013
Upstream Blk Time (%)										
Queuing Penalty (veh)										
Storage Bay Dist (ft)	200	200			300	450	450			
Storage Blk Time (%)	0	1	12	1				0		
Queuing Penalty (veh)	0	5	28	2				0		

Intersection: 2: Redwood Road & Crossroads Blvd, Interval #3

Movement	EB	EB	EB	EB	EB	EB	WB	WB	WB	WB	WB	WB
Directions Served	L	L	T	T	T	R	L	L	T	T	T	R
Maximum Queue (ft)	119	138	154	139	88	27	184	201	161	147	145	89
Average Queue (ft)	68	87	108	88	29	8	128	145	100	102	91	47
95th Queue (ft)	122	146	156	149	94	27	237	245	160	149	142	92
Link Distance (ft)			1586	1586					901	901		
Upstream Blk Time (%)												
Queuing Penalty (veh)												
Storage Bay Dist (ft)	700	700			500	500	220	220			340	340
Storage Blk Time (%)							1	3	0			
Queuing Penalty (veh)							1	6	0			

Intersection: 2: Redwood Road & Crossroads Blvd, Interval #3

Movement	NB	NB	NB	NB	NB	SB	SB	SB	SB	SB
Directions Served	L	L	T	T	R	L	L	T	T	R
Maximum Queue (ft)	153	182	251	216	78	149	158	286	304	73
Average Queue (ft)	89	127	181	160	44	83	103	182	198	35
95th Queue (ft)	172	193	266	234	78	151	159	305	320	71
Link Distance (ft)			1242	1242				1013	1013	1013
Upstream Blk Time (%)										
Queuing Penalty (veh)										
Storage Bay Dist (ft)	200	200			300	450	450			
Storage Blk Time (%)	0	1	7							
Queuing Penalty (veh)	0	4	14							

Intersection: 2: Redwood Road & Crossroads Blvd, Interval #4

Movement	EB	EB	EB	EB	EB	EB	WB	WB	WB	WB	WB	WB
Directions Served	L	L	T	T	T	R	L	L	T	T	T	R
Maximum Queue (ft)	93	126	153	143	95	30	174	191	126	143	140	78
Average Queue (ft)	53	77	110	88	26	10	122	139	88	95	86	45
95th Queue (ft)	97	134	161	155	88	35	203	210	133	148	146	84
Link Distance (ft)			1586	1586					901	901		
Upstream Blk Time (%)												
Queuing Penalty (veh)												
Storage Bay Dist (ft)	700	700			500	500	220	220			340	340
Storage Blk Time (%)							1	1				
Queuing Penalty (veh)							2	2				

Intersection: 2: Redwood Road & Crossroads Blvd, Interval #4

Movement	NB	NB	NB	NB	NB	SB	SB	SB	SB	SB
Directions Served	L	L	T	T	R	L	L	T	T	R
Maximum Queue (ft)	160	193	265	246	78	130	146	262	276	65
Average Queue (ft)	86	132	182	161	44	84	102	172	189	33
95th Queue (ft)	172	194	282	259	82	141	158	284	295	66
Link Distance (ft)			1242	1242				1013	1013	1013
Upstream Blk Time (%)										
Queuing Penalty (veh)										
Storage Bay Dist (ft)	200	200			300	450	450			
Storage Blk Time (%)	0	0	6	0						
Queuing Penalty (veh)	0	2	13	0						

Intersection: 2: Redwood Road & Crossroads Blvd, All Intervals

Movement	EB	EB	EB	EB	EB	EB	WB	WB	WB	WB	WB	WB
Directions Served	L	L	T	T	T	R	L	L	T	T	T	R
Maximum Queue (ft)	134	161	184	172	143	50	221	246	211	184	177	107
Average Queue (ft)	61	86	110	92	30	9	120	139	94	96	88	43
95th Queue (ft)	113	144	164	153	98	30	216	229	160	156	152	83
Link Distance (ft)			1586	1586					901	901		
Upstream Blk Time (%)												
Queuing Penalty (veh)												
Storage Bay Dist (ft)	700	700			500	500	220	220			340	340
Storage Blk Time (%)							1	3	0			
Queuing Penalty (veh)							2	5	1			

Intersection: 2: Redwood Road & Crossroads Blvd, All Intervals

Movement	NB	NB	NB	NB	NB	SB	SB	SB	SB	SB
Directions Served	L	L	T	T	R	L	L	T	T	R
Maximum Queue (ft)	189	224	314	294	110	176	192	346	342	90
Average Queue (ft)	86	131	188	165	45	88	105	186	203	35
95th Queue (ft)	173	201	286	262	83	152	168	307	317	67
Link Distance (ft)			1242	1242				1013	1013	1013
Upstream Blk Time (%)										
Queuing Penalty (veh)										
Storage Bay Dist (ft)	200	200			300	450	450			
Storage Blk Time (%)	0	1	7	0				0		
Queuing Penalty (veh)	0	3	17	1				0		

Intersection: 3: Redwood Road & Commerce Drive, Interval #1

Movement	EB	EB	EB	WB	WB	WB	NB	NB	NB	NB	SB	SB
Directions Served	L	T	R	L	T	R	L	T	T	R	L	T
Maximum Queue (ft)	193	216	138	69	67	69	141	316	313	30	150	255
Average Queue (ft)	138	78	60	30	29	34	64	223	219	13	81	158
95th Queue (ft)	215	220	135	77	71	67	143	338	325	35	156	264
Link Distance (ft)		1102			583			1013	1013			503
Upstream Blk Time (%)												
Queuing Penalty (veh)												
Storage Bay Dist (ft)	110		150	105		105	250			250	300	
Storage Blk Time (%)	33	0		1	0	0		6	5			0
Queuing Penalty (veh)	59	1		1	1	0		7	3			0

Intersection: 3: Redwood Road & Commerce Drive, Interval #1

Movement	SB	SB
Directions Served	T	R
Maximum Queue (ft)	266	157
Average Queue (ft)	170	56
95th Queue (ft)	285	175
Link Distance (ft)	503	
Upstream Blk Time (%)		
Queuing Penalty (veh)		
Storage Bay Dist (ft)		150
Storage Blk Time (%)	9	
Queuing Penalty (veh)	29	

Intersection: 3: Redwood Road & Commerce Drive, Interval #2

Movement	EB	EB	EB	WB	WB	WB	NB	NB	NB	NB	SB	SB
Directions Served	L	T	R	L	T	R	L	T	T	R	L	T
Maximum Queue (ft)	201	294	127	62	76	64	157	344	364	105	136	268
Average Queue (ft)	151	105	55	30	27	36	79	250	258	17	87	167
95th Queue (ft)	223	334	111	68	72	68	169	349	359	93	155	281
Link Distance (ft)		1102			583			1013	1013			503
Upstream Blk Time (%)												
Queuing Penalty (veh)												
Storage Bay Dist (ft)	110		150	105		105	250			250	300	
Storage Blk Time (%)	34	0	1		0	0		9	11			1
Queuing Penalty (veh)	65	1	2		0	0		11	8			1

Intersection: 3: Redwood Road & Commerce Drive, Interval #2

Movement	SB	SB
Directions Served	T	R
Maximum Queue (ft)	268	163
Average Queue (ft)	170	55
95th Queue (ft)	289	177
Link Distance (ft)	503	
Upstream Blk Time (%)		
Queuing Penalty (veh)		
Storage Bay Dist (ft)		150
Storage Blk Time (%)	9	
Queuing Penalty (veh)	31	

Intersection: 3: Redwood Road & Commerce Drive, Interval #3

Movement	EB	EB	EB	WB	WB	WB	NB	NB	NB	NB	SB	SB
Directions Served	L	T	R	L	T	R	L	T	T	R	L	T
Maximum Queue (ft)	190	287	138	65	75	68	147	319	313	32	132	270
Average Queue (ft)	143	93	67	29	30	38	72	231	238	12	88	175
95th Queue (ft)	221	287	153	64	74	74	150	334	329	31	153	291
Link Distance (ft)		1102			583			1013	1013			503
Upstream Blk Time (%)												
Queuing Penalty (veh)												
Storage Bay Dist (ft)	110		150	105		105	250			250	300	
Storage Blk Time (%)	34	0	1	0	1		0	4	5			1
Queuing Penalty (veh)	60	0	1	0	1		0	5	3			1

Intersection: 3: Redwood Road & Commerce Drive, Interval #3

Movement	SB	SB
Directions Served	T	R
Maximum Queue (ft)	273	144
Average Queue (ft)	175	49
95th Queue (ft)	274	148
Link Distance (ft)	503	
Upstream Blk Time (%)		
Queuing Penalty (veh)		
Storage Bay Dist (ft)		150
Storage Blk Time (%)	11	0
Queuing Penalty (veh)	34	0

Intersection: 3: Redwood Road & Commerce Drive, Interval #4

Movement	EB	EB	EB	WB	WB	WB	NB	NB	NB	NB	SB	SB
Directions Served	L	T	R	L	T	R	L	T	T	R	L	T
Maximum Queue (ft)	195	195	143	76	57	60	126	332	311	70	143	235
Average Queue (ft)	136	67	59	35	30	31	71	237	232	20	83	139
95th Queue (ft)	207	189	134	84	68	63	133	346	335	96	155	250
Link Distance (ft)		1102			583			1013	1013			503
Upstream Blk Time (%)												
Queuing Penalty (veh)												
Storage Bay Dist (ft)	110		150	105		105	250			250	300	
Storage Blk Time (%)	29	0	0	1	0	0		5	6			0
Queuing Penalty (veh)	51	0	0	2	0	0		6	4			0

Intersection: 3: Redwood Road & Commerce Drive, Interval #4

Movement	SB	SB
Directions Served	T	R
Maximum Queue (ft)	258	177
Average Queue (ft)	160	58
95th Queue (ft)	284	176
Link Distance (ft)	503	
Upstream Blk Time (%)		
Queuing Penalty (veh)		
Storage Bay Dist (ft)		150
Storage Blk Time (%)	8	
Queuing Penalty (veh)	26	

Intersection: 3: Redwood Road & Commerce Drive, All Intervals

Movement	EB	EB	EB	WB	WB	WB	NB	NB	NB	NB	SB	SB
Directions Served	L	T	R	L	T	R	L	T	T	R	L	T
Maximum Queue (ft)	208	374	189	92	93	93	195	374	374	147	180	312
Average Queue (ft)	142	86	60	31	29	35	72	235	237	16	85	160
95th Queue (ft)	217	264	135	74	71	68	150	343	340	71	155	273
Link Distance (ft)		1102			583			1013	1013			503
Upstream Blk Time (%)												
Queuing Penalty (veh)												
Storage Bay Dist (ft)	110		150	105		105	250			250	300	
Storage Blk Time (%)	33	0	0	1	0	0	0	6	7			0
Queuing Penalty (veh)	59	1	1	1	0	0	0	7	4			1

Intersection: 3: Redwood Road & Commerce Drive, All Intervals

Movement	SB	SB
Directions Served	T	R
Maximum Queue (ft)	321	250
Average Queue (ft)	169	55
95th Queue (ft)	284	169
Link Distance (ft)	503	
Upstream Blk Time (%)		
Queuing Penalty (veh)		
Storage Bay Dist (ft)		150
Storage Blk Time (%)	9	0
Queuing Penalty (veh)	30	0

Intersection: 11: Redwood Road & Aspen Hills Blvd, Interval #1

Movement	EB	EB	WB	WB	WB	WB	NB	NB	NB	NB	SB	SB
Directions Served	L	R	L	L	T	R	L	T	T	R	L	T
Maximum Queue (ft)	31	40	136	162	19	164	72	190	183	37	194	100
Average Queue (ft)	10	17	71	114	3	88	37	110	104	13	113	56
95th Queue (ft)	32	45	143	173	41	162	81	201	190	34	200	107
Link Distance (ft)					662			1024	1024			1485
Upstream Blk Time (%)												
Queuing Penalty (veh)												
Storage Bay Dist (ft)	150	150	200	200		150	100			100	200	
Storage Blk Time (%)			0	0		3	1	10	8		1	
Queuing Penalty (veh)			0	1		6	3	4	10		12	

Intersection: 11: Redwood Road & Aspen Hills Blvd, Interval #1

Movement	SB	SB
Directions Served	T	R
Maximum Queue (ft)	103	17
Average Queue (ft)	58	5
95th Queue (ft)	113	18
Link Distance (ft)	1485	
Upstream Blk Time (%)		
Queuing Penalty (veh)		
Storage Bay Dist (ft)		200
Storage Blk Time (%)		
Queuing Penalty (veh)		

Intersection: 11: Redwood Road & Aspen Hills Blvd, Interval #2

Movement	EB	EB	WB	WB	WB	WB	NB	NB	NB	NB	SB	SB
Directions Served	L	R	L	L	T	R	L	T	T	R	L	T
Maximum Queue (ft)	28	46	165	198	34	183	84	224	218	38	166	98
Average Queue (ft)	8	18	102	141	5	108	44	128	127	13	115	48
95th Queue (ft)	31	46	185	209	53	196	92	227	225	36	191	103
Link Distance (ft)					662			1024	1024			1485
Upstream Blk Time (%)												
Queuing Penalty (veh)												
Storage Bay Dist (ft)	150	150	200	200		150	100			100	200	
Storage Blk Time (%)			1	1	0	5	2	16	14		1	
Queuing Penalty (veh)			1	3	1	13	9	7	18		7	

Intersection: 11: Redwood Road & Aspen Hills Blvd, Interval #2

Movement	SB	SB
Directions Served	T	R
Maximum Queue (ft)	120	23
Average Queue (ft)	58	6
95th Queue (ft)	131	23
Link Distance (ft)	1485	
Upstream Blk Time (%)		
Queuing Penalty (veh)		
Storage Bay Dist (ft)		200
Storage Blk Time (%)		
Queuing Penalty (veh)		

Intersection: 11: Redwood Road & Aspen Hills Blvd, Interval #3

Movement	EB	EB	WB	WB	WB	WB	NB	NB	NB	NB	SB	SB
Directions Served	L	R	L	L	T	R	L	T	T	R	L	T
Maximum Queue (ft)	35	53	147	188	42	175	82	219	218	39	229	95
Average Queue (ft)	9	20	83	125	6	98	42	129	124	14	140	46
95th Queue (ft)	34	52	171	207	64	181	95	229	223	38	257	105
Link Distance (ft)					662			1024	1024			1485
Upstream Blk Time (%)												
Queuing Penalty (veh)												
Storage Bay Dist (ft)	150	150	200	200		150	100			100	200	
Storage Blk Time (%)			0	1	0	3	3	14	11		5	
Queuing Penalty (veh)			0	2	0	8	16	6	14		42	

Intersection: 11: Redwood Road & Aspen Hills Blvd, Interval #3

Movement	SB	SB
Directions Served	T	R
Maximum Queue (ft)	105	6
Average Queue (ft)	47	2
95th Queue (ft)	114	8
Link Distance (ft)	1485	
Upstream Blk Time (%)		
Queuing Penalty (veh)		
Storage Bay Dist (ft)		200
Storage Blk Time (%)	0	
Queuing Penalty (veh)	0	

Intersection: 11: Redwood Road & Aspen Hills Blvd, Interval #4

Movement	EB	EB	WB	WB	WB	NB	NB	NB	NB	SB	SB	SB
Directions Served	L	R	L	L	R	L	T	T	R	L	T	T
Maximum Queue (ft)	33	30	166	199	153	79	175	172	28	168	109	86
Average Queue (ft)	10	14	83	127	79	37	106	98	12	115	40	33
95th Queue (ft)	34	36	160	194	153	82	180	174	29	189	109	91
Link Distance (ft)							1024	1024			1485	1485
Upstream Blk Time (%)												
Queuing Penalty (veh)												
Storage Bay Dist (ft)	150	150	200	200	150	100			100	200		
Storage Blk Time (%)			0	1	2	0	8	6		1		0
Queuing Penalty (veh)			0	3	5	2	4	7		6		0

Intersection: 11: Redwood Road & Aspen Hills Blvd, Interval #4

Movement	SB
Directions Served	R
Maximum Queue (ft)	13
Average Queue (ft)	2
95th Queue (ft)	13
Link Distance (ft)	
Upstream Blk Time (%)	
Queuing Penalty (veh)	
Storage Bay Dist (ft)	200
Storage Blk Time (%)	
Queuing Penalty (veh)	

Intersection: 11: Redwood Road & Aspen Hills Blvd, All Intervals

Movement	EB	EB	WB	WB	WB	WB	NB	NB	NB	NB	SB	SB
Directions Served	L	R	L	L	T	R	L	T	T	R	L	T
Maximum Queue (ft)	46	69	186	216	57	224	103	254	245	49	261	130
Average Queue (ft)	9	17	85	127	3	93	40	118	113	13	121	48
95th Queue (ft)	33	45	167	198	46	175	88	211	206	35	213	107
Link Distance (ft)					662			1024	1024			1485
Upstream Blk Time (%)												
Queuing Penalty (veh)												
Storage Bay Dist (ft)	150	150	200	200		150	100			100	200	
Storage Blk Time (%)			0	1	0	3	1	12	10		2	
Queuing Penalty (veh)			0	2	0	8	8	5	12		17	

Intersection: 11: Redwood Road & Aspen Hills Blvd, All Intervals

Movement	SB	SB
Directions Served	T	R
Maximum Queue (ft)	141	28
Average Queue (ft)	49	4
95th Queue (ft)	115	16
Link Distance (ft)	1485	
Upstream Blk Time (%)		
Queuing Penalty (veh)		
Storage Bay Dist (ft)		200
Storage Blk Time (%)	0	
Queuing Penalty (veh)	0	

Intersection: 13: Redwood Road & Sergeant Court Drive, Interval #1

Movement	EB	EB	WB	WB	NB	NB	SB	SB	SB
Directions Served	LT	R	LT	R	L	R	L	T	T
Maximum Queue (ft)	23	40	119	76	40	15	102	24	12
Average Queue (ft)	5	19	57	41	16	3	51	3	2
95th Queue (ft)	25	44	130	72	45	19	102	37	26
Link Distance (ft)		819	665					1024	1024
Upstream Blk Time (%)									
Queuing Penalty (veh)									
Storage Bay Dist (ft)	25			150	50	100	150		
Storage Blk Time (%)	12	16	3		3		0	0	
Queuing Penalty (veh)	3	1	5		19		1	0	

Intersection: 13: Redwood Road & Sergeant Court Drive, Interval #2

Movement	EB	EB	WB	WB	NB	NB	NB	SB	SB
Directions Served	LT	R	LT	R	L	T	R	L	T
Maximum Queue (ft)	35	52	132	91	39	9	10	89	11
Average Queue (ft)	8	17	79	53	14	1	2	54	2
95th Queue (ft)	31	53	163	104	42	20	11	94	23
Link Distance (ft)		819	665			503			1024
Upstream Blk Time (%)									
Queuing Penalty (veh)									
Storage Bay Dist (ft)	25			150	50		100	150	
Storage Blk Time (%)	21	19	8	0	2				
Queuing Penalty (veh)	6	1	11	0	14				

Intersection: 13: Redwood Road & Sergeant Court Drive, Interval #3

Movement	EB	EB	WB	WB	NB	NB	NB	SB	SB
Directions Served	LT	R	LT	R	L	T	R	L	R
Maximum Queue (ft)	32	56	162	103	44	14	6	86	2
Average Queue (ft)	8	20	120	61	20	2	1	52	0
95th Queue (ft)	30	54	298	166	52	29	7	91	5
Link Distance (ft)		819	665			503			
Upstream Blk Time (%)									
Queuing Penalty (veh)									
Storage Bay Dist (ft)	25			150	50		100	150	100
Storage Blk Time (%)	20	22	32		9				
Queuing Penalty (veh)	5	1	45		52				

Intersection: 13: Redwood Road & Sergeant Court Drive, Interval #4

Movement	EB	EB	WB	WB	NB	NB	SB
Directions Served	LT	R	LT	R	L	R	L
Maximum Queue (ft)	24	44	127	101	39	6	91
Average Queue (ft)	4	17	74	45	16	2	51
95th Queue (ft)	21	44	197	101	46	10	93
Link Distance (ft)		819	665				
Upstream Blk Time (%)							
Queuing Penalty (veh)							
Storage Bay Dist (ft)	25			150	50	100	150
Storage Blk Time (%)	7	15	17	1	3		
Queuing Penalty (veh)	2	1	24	0	16		

Intersection: 13: Redwood Road & Sergeant Court Drive, All Intervals

Movement	EB	EB	WB	WB	NB	NB	NB	SB	SB	SB	SB
Directions Served	LT	R	LT	R	L	T	R	L	T	T	R
Maximum Queue (ft)	44	71	196	150	54	23	24	118	24	12	2
Average Queue (ft)	6	18	83	50	17	1	2	52	1	1	0
95th Queue (ft)	27	49	210	118	46	17	13	95	21	12	2
Link Distance (ft)		819	665			503			1024	1024	
Upstream Blk Time (%)											
Queuing Penalty (veh)											
Storage Bay Dist (ft)	25			150	50		100	150			100
Storage Blk Time (%)	15	18	15	0	4			0	0		
Queuing Penalty (veh)	4	1	21	0	25			0	0		

Intersection: 19: 3600 West & 2100 North WB, Interval #1

Movement	WB	WB	WB	WB	NB	NB	NB	SB	SB	SB
Directions Served	L	T	T	R	L	T	T	T	T	R
Maximum Queue (ft)	150	140	141	144	146	146	151	458	430	299
Average Queue (ft)	141	125	108	115	86	91	98	318	293	127
95th Queue (ft)	148	156	153	164	154	152	158	462	441	327
Link Distance (ft)	80	80	80	80	260	260	260	760	760	
Upstream Blk Time (%)	54	25	15	18						
Queuing Penalty (veh)	216	99	59	70						
Storage Bay Dist (ft)										150
Storage Blk Time (%)									34	0
Queuing Penalty (veh)									86	0

Intersection: 19: 3600 West & 2100 North WB, Interval #2

Movement	WB	WB	WB	WB	NB	NB	NB	SB	SB	SB
Directions Served	L	T	T	R	L	T	T	T	T	R
Maximum Queue (ft)	152	150	138	144	139	151	151	480	472	300
Average Queue (ft)	141	120	102	120	100	114	115	390	372	167
95th Queue (ft)	154	166	156	169	155	159	159	555	544	376
Link Distance (ft)	80	80	80	80	260	260	260	760	760	
Upstream Blk Time (%)	56	23	16	25					0	
Queuing Penalty (veh)	238	99	66	107					0	
Storage Bay Dist (ft)										150
Storage Blk Time (%)									35	0
Queuing Penalty (veh)									96	0

Intersection: 19: 3600 West & 2100 North WB, Interval #3

Movement	WB	WB	WB	WB	NB	NB	NB	SB	SB	SB
Directions Served	L	T	T	R	L	T	T	T	T	R
Maximum Queue (ft)	142	142	134	152	128	141	141	417	402	278
Average Queue (ft)	139	123	105	126	82	89	96	317	289	122
95th Queue (ft)	141	157	146	170	137	140	149	446	426	312
Link Distance (ft)	80	80	80	80	260	260	260	760	760	
Upstream Blk Time (%)	52	24	15	20						
Queuing Penalty (veh)	206	95	60	79						
Storage Bay Dist (ft)										150
Storage Blk Time (%)									31	0
Queuing Penalty (veh)									79	1

Intersection: 19: 3600 West & 2100 North WB, Interval #4

Movement	WB	WB	WB	WB	NB	NB	NB	SB	SB	SB
Directions Served	L	T	T	R	L	T	T	T	T	R
Maximum Queue (ft)	147	142	138	154	146	142	147	429	390	232
Average Queue (ft)	140	116	98	108	102	101	105	319	286	95
95th Queue (ft)	150	166	148	163	163	153	160	432	400	256
Link Distance (ft)	80	80	80	80	260	260	260	760	760	
Upstream Blk Time (%)	55	24	15	21						
Queuing Penalty (veh)	220	97	60	82						
Storage Bay Dist (ft)										150
Storage Blk Time (%)									25	0
Queuing Penalty (veh)									64	1

Intersection: 19: 3600 West & 2100 North WB, All Intervals

Movement	WB	WB	WB	WB	NB	NB	NB	SB	SB	SB
Directions Served	L	T	T	R	L	T	T	T	T	R
Maximum Queue (ft)	161	152	143	162	162	161	169	521	508	300
Average Queue (ft)	140	121	104	117	93	99	104	336	310	128
95th Queue (ft)	149	162	151	168	154	154	158	484	466	323
Link Distance (ft)	80	80	80	80	260	260	260	760	760	
Upstream Blk Time (%)	54	24	15	21					0	
Queuing Penalty (veh)	220	97	62	85					0	
Storage Bay Dist (ft)										150
Storage Blk Time (%)									32	0
Queuing Penalty (veh)									81	1

Intersection: 20: 3600 West & 2100 North EB, Interval #1

Movement	EB	EB	EB	EB	NB	NB	SB	SB	SB
Directions Served	L	T	T	R	T	R	L	L	T
Maximum Queue (ft)	128	130	138	116	216	329	230	226	79
Average Queue (ft)	104	125	125	73	156	207	188	189	41
95th Queue (ft)	145	137	148	121	245	350	251	247	87
Link Distance (ft)	62	62	62	62	2313	2313	260	260	260
Upstream Blk Time (%)	42	47	43	13			1	0	
Queuing Penalty (veh)	147	164	151	47			4	0	
Storage Bay Dist (ft)									
Storage Blk Time (%)									
Queuing Penalty (veh)									

Intersection: 20: 3600 West & 2100 North EB, Interval #2

Movement	EB	EB	EB	EB	NB	NB	SB	SB	SB
Directions Served	L	T	T	R	T	R	L	L	T
Maximum Queue (ft)	127	137	137	113	255	358	237	244	93
Average Queue (ft)	105	127	127	82	163	240	198	199	41
95th Queue (ft)	135	138	141	131	280	462	261	264	102
Link Distance (ft)	62	62	62	62	2313	2313	260	260	260
Upstream Blk Time (%)	44	53	50	15			0	2	
Queuing Penalty (veh)	167	199	189	56			0	9	
Storage Bay Dist (ft)									
Storage Blk Time (%)									
Queuing Penalty (veh)									

Intersection: 20: 3600 West & 2100 North EB, Interval #3

Movement	EB	EB	EB	EB	NB	NB	SB	SB	SB
Directions Served	L	T	T	R	T	R	L	L	T
Maximum Queue (ft)	124	136	131	113	263	298	242	236	94
Average Queue (ft)	100	126	126	75	164	204	195	193	44
95th Queue (ft)	142	137	133	120	269	322	262	265	98
Link Distance (ft)	62	62	62	62	2313	2313	260	260	260
Upstream Blk Time (%)	37	50	46	13			0	1	
Queuing Penalty (veh)	129	176	161	47			1	4	
Storage Bay Dist (ft)									
Storage Blk Time (%)									
Queuing Penalty (veh)									

Intersection: 20: 3600 West & 2100 North EB, Interval #4

Movement	EB	EB	EB	EB	NB	NB	SB	SB	SB
Directions Served	L	T	T	R	T	R	L	L	T
Maximum Queue (ft)	122	130	134	105	263	256	233	225	102
Average Queue (ft)	106	126	126	73	158	178	154	148	30
95th Queue (ft)	132	134	136	118	273	292	239	240	95
Link Distance (ft)	62	62	62	62	2313	2313	260	260	260
Upstream Blk Time (%)	44	54	51	11			1	0	
Queuing Penalty (veh)	155	191	181	37			4	0	
Storage Bay Dist (ft)									
Storage Blk Time (%)									
Queuing Penalty (veh)									

Intersection: 20: 3600 West & 2100 North EB, All Intervals

Movement	EB	EB	EB	EB	NB	NB	SB	SB	SB
Directions Served	L	T	T	R	T	R	L	L	T
Maximum Queue (ft)	134	144	149	126	306	426	249	254	136
Average Queue (ft)	104	126	126	76	160	207	184	182	39
95th Queue (ft)	139	137	141	123	267	367	260	262	97
Link Distance (ft)	62	62	62	62	2313	2313	260	260	260
Upstream Blk Time (%)	42	51	48	13			0	1	
Queuing Penalty (veh)	149	182	170	47			2	4	
Storage Bay Dist (ft)									
Storage Blk Time (%)									
Queuing Penalty (veh)									

Intersection: 22: 2100 North WB, Interval #1

Movement	WB	WB	WB	WB	WB
Directions Served	L	T	T	T	T
Maximum Queue (ft)	100	368	84	47	63
Average Queue (ft)	36	248	25	9	16
95th Queue (ft)	247	461	92	42	64
Link Distance (ft)		2054	2054	2054	
Upstream Blk Time (%)					
Queuing Penalty (veh)					
Storage Bay Dist (ft)	200				150
Storage Blk Time (%)		21			0
Queuing Penalty (veh)		56			0

Intersection: 22: 2100 North WB, Interval #2

Movement	WB	WB	WB	WB	WB
Directions Served	L	T	T	T	T
Maximum Queue (ft)	69	323	73	40	102
Average Queue (ft)	17	195	23	8	34
95th Queue (ft)	157	385	74	43	110
Link Distance (ft)		2054	2054	2054	
Upstream Blk Time (%)					
Queuing Penalty (veh)					
Storage Bay Dist (ft)	200				150
Storage Blk Time (%)		14		0	0
Queuing Penalty (veh)		40		0	1

Intersection: 22: 2100 North WB, Interval #3

Movement	WB	WB	WB	WB	WB
Directions Served	L	T	T	T	T
Maximum Queue (ft)	4	334	51	23	105
Average Queue (ft)	1	211	13	3	33
95th Queue (ft)	8	363	50	18	115
Link Distance (ft)		2054	2054	2054	
Upstream Blk Time (%)					
Queuing Penalty (veh)					
Storage Bay Dist (ft)	200				150
Storage Blk Time (%)		12			1
Queuing Penalty (veh)		33			2

Intersection: 22: 2100 North WB, Interval #4

Movement	WB	WB	WB	WB
Directions Served	T	T	T	T
Maximum Queue (ft)	306	65	33	108
Average Queue (ft)	189	19	8	22
95th Queue (ft)	345	62	39	101
Link Distance (ft)	2054	2054	2054	
Upstream Blk Time (%)				
Queuing Penalty (veh)				
Storage Bay Dist (ft)				150
Storage Blk Time (%)	12			1
Queuing Penalty (veh)	32			2

Intersection: 22: 2100 North WB, All Intervals

Movement	WB	WB	WB	WB	WB
Directions Served	L	T	T	T	T
Maximum Queue (ft)	169	438	110	76	159
Average Queue (ft)	13	211	20	7	26
95th Queue (ft)	142	394	71	37	100
Link Distance (ft)		2054	2054	2054	
Upstream Blk Time (%)					
Queuing Penalty (veh)					
Storage Bay Dist (ft)	200				150
Storage Blk Time (%)		15		0	0
Queuing Penalty (veh)		40		0	1

Intersection: 23: 2100 North EB, Interval #1

Movement	EB	EB	SE
Directions Served	T	T	L
Maximum Queue (ft)	8	9	193
Average Queue (ft)	1	1	122
95th Queue (ft)	16	14	199
Link Distance (ft)	89	89	279
Upstream Blk Time (%)			
Queuing Penalty (veh)			
Storage Bay Dist (ft)			
Storage Blk Time (%)			
Queuing Penalty (veh)			

Intersection: 23: 2100 North EB, Interval #2

Movement	EB	EB	SE
Directions Served	T	T	L
Maximum Queue (ft)	31	37	237
Average Queue (ft)	4	8	137
95th Queue (ft)	34	47	256
Link Distance (ft)	89	89	279
Upstream Blk Time (%)	0	0	2
Queuing Penalty (veh)	0	1	7
Storage Bay Dist (ft)			
Storage Blk Time (%)			
Queuing Penalty (veh)			

Intersection: 23: 2100 North EB, Interval #3

Movement	EB	EB	SE
Directions Served	T	T	L
Maximum Queue (ft)	24	36	230
Average Queue (ft)	4	5	149
95th Queue (ft)	32	34	246
Link Distance (ft)	89	89	279
Upstream Blk Time (%)	0	0	1
Queuing Penalty (veh)	0	0	2
Storage Bay Dist (ft)			
Storage Blk Time (%)			
Queuing Penalty (veh)			

Intersection: 23: 2100 North EB, Interval #4

Movement	EB	SE
Directions Served	T	L
Maximum Queue (ft)	3	195
Average Queue (ft)	0	96
95th Queue (ft)	5	185
Link Distance (ft)	89	279
Upstream Blk Time (%)		
Queuing Penalty (veh)		
Storage Bay Dist (ft)		
Storage Blk Time (%)		
Queuing Penalty (veh)		

Intersection: 23: 2100 North EB, All Intervals

Movement	EB	EB	SE
Directions Served	T	T	L
Maximum Queue (ft)	52	59	266
Average Queue (ft)	3	4	126
95th Queue (ft)	25	29	228
Link Distance (ft)	89	89	279
Upstream Blk Time (%)	0	0	1
Queuing Penalty (veh)	0	0	2
Storage Bay Dist (ft)			
Storage Blk Time (%)			
Queuing Penalty (veh)			

Intersection: 24: 2100 North EB, Interval #1

Movement	EB	EB	EB	EB
Directions Served	LT	T	T	T
Maximum Queue (ft)	249	176	167	20
Average Queue (ft)	124	109	99	3
95th Queue (ft)	285	191	179	19
Link Distance (ft)		2002	2002	
Upstream Blk Time (%)				
Queuing Penalty (veh)				
Storage Bay Dist (ft)	150			150
Storage Blk Time (%)	8	2	2	
Queuing Penalty (veh)	28	13	6	

Intersection: 24: 2100 North EB, Interval #2

Movement	EB	EB	EB	EB
Directions Served	LT	T	T	T
Maximum Queue (ft)	278	275	228	16
Average Queue (ft)	133	145	127	2
95th Queue (ft)	315	291	234	14
Link Distance (ft)		2002	2002	
Upstream Blk Time (%)				
Queuing Penalty (veh)				
Storage Bay Dist (ft)	150			150
Storage Blk Time (%)	13	6	6	
Queuing Penalty (veh)	48	39	21	

Intersection: 24: 2100 North EB, Interval #3

Movement	EB	EB	EB	EB
Directions Served	LT	T	T	T
Maximum Queue (ft)	231	189	180	15
Average Queue (ft)	105	117	101	3
95th Queue (ft)	280	212	188	21
Link Distance (ft)		2002	2002	
Upstream Blk Time (%)				
Queuing Penalty (veh)				
Storage Bay Dist (ft)	150			150
Storage Blk Time (%)	7	2	2	
Queuing Penalty (veh)	25	13	8	

Intersection: 24: 2100 North EB, Interval #4

Movement	EB	EB	EB	EB
Directions Served	LT	T	T	T
Maximum Queue (ft)	250	227	200	11
Average Queue (ft)	118	133	118	2
95th Queue (ft)	265	234	213	17
Link Distance (ft)		2002	2002	
Upstream Blk Time (%)				
Queuing Penalty (veh)				
Storage Bay Dist (ft)	150			150
Storage Blk Time (%)	8	5	4	
Queuing Penalty (veh)	27	35	15	

Intersection: 24: 2100 North EB, All Intervals

Movement	EB	EB	EB	EB
Directions Served	LT	T	T	T
Maximum Queue (ft)	323	307	247	40
Average Queue (ft)	120	126	111	2
95th Queue (ft)	288	237	206	18
Link Distance (ft)		2002	2002	
Upstream Blk Time (%)				
Queuing Penalty (veh)				
Storage Bay Dist (ft)	150			150
Storage Blk Time (%)	9	4	3	
Queuing Penalty (veh)	32	25	13	

Intersection: 25: 2100 North WB, Interval #1

Movement	WB	WB	NW
Directions Served	T	T	L
Maximum Queue (ft)	9	31	130
Average Queue (ft)	1	6	65
95th Queue (ft)	11	29	128
Link Distance (ft)	70	70	273
Upstream Blk Time (%)		0	
Queuing Penalty (veh)		0	
Storage Bay Dist (ft)			
Storage Blk Time (%)			
Queuing Penalty (veh)			

Intersection: 25: 2100 North WB, Interval #2

Movement	WB	WB	NW
Directions Served	T	T	L
Maximum Queue (ft)	12	52	179
Average Queue (ft)	2	15	95
95th Queue (ft)	19	52	188
Link Distance (ft)	70	70	273
Upstream Blk Time (%)	0	0	0
Queuing Penalty (veh)	0	1	0
Storage Bay Dist (ft)			
Storage Blk Time (%)			
Queuing Penalty (veh)			

Intersection: 25: 2100 North WB, Interval #3

Movement	WB	WB	NW
Directions Served	T	T	L
Maximum Queue (ft)	11	31	160
Average Queue (ft)	1	8	67
95th Queue (ft)	16	34	158
Link Distance (ft)	70	70	273
Upstream Blk Time (%)	0	0	1
Queuing Penalty (veh)	0	0	2
Storage Bay Dist (ft)			
Storage Blk Time (%)			
Queuing Penalty (veh)			

Intersection: 25: 2100 North WB, Interval #4

Movement	WB	WB	NW
Directions Served	T	T	L
Maximum Queue (ft)	5	36	187
Average Queue (ft)	1	7	88
95th Queue (ft)	13	33	217
Link Distance (ft)	70	70	273
Upstream Blk Time (%)		0	1
Queuing Penalty (veh)		0	2
Storage Bay Dist (ft)			
Storage Blk Time (%)			
Queuing Penalty (veh)			

Intersection: 25: 2100 North WB, All Intervals

Movement	WB	WB	NW
Directions Served	T	T	L
Maximum Queue (ft)	28	59	254
Average Queue (ft)	1	9	79
95th Queue (ft)	15	38	178
Link Distance (ft)	70	70	273
Upstream Blk Time (%)	0	0	0
Queuing Penalty (veh)	0	0	1
Storage Bay Dist (ft)			
Storage Blk Time (%)			
Queuing Penalty (veh)			

Intersection: 29: , Interval #1

Movement
Directions Served
Maximum Queue (ft)
Average Queue (ft)
95th Queue (ft)
Link Distance (ft)
Upstream Blk Time (%)
Queuing Penalty (veh)
Storage Bay Dist (ft)
Storage Blk Time (%)
Queuing Penalty (veh)

Intersection: 29: , Interval #2

Movement
Directions Served
Maximum Queue (ft)
Average Queue (ft)
95th Queue (ft)
Link Distance (ft)
Upstream Blk Time (%)
Queuing Penalty (veh)
Storage Bay Dist (ft)
Storage Blk Time (%)
Queuing Penalty (veh)

Intersection: 29: , Interval #3

Movement
Directions Served
Maximum Queue (ft)
Average Queue (ft)
95th Queue (ft)
Link Distance (ft)
Upstream Blk Time (%)
Queuing Penalty (veh)
Storage Bay Dist (ft)
Storage Blk Time (%)
Queuing Penalty (veh)

Intersection: 29: , Interval #4

Movement
Directions Served
Maximum Queue (ft)
Average Queue (ft)
95th Queue (ft)
Link Distance (ft)
Upstream Blk Time (%)
Queuing Penalty (veh)
Storage Bay Dist (ft)
Storage Blk Time (%)
Queuing Penalty (veh)

Intersection: 29: , All Intervals

Movement
Directions Served
Maximum Queue (ft)
Average Queue (ft)
95th Queue (ft)
Link Distance (ft)
Upstream Blk Time (%)
Queuing Penalty (veh)
Storage Bay Dist (ft)
Storage Blk Time (%)
Queuing Penalty (veh)

Intersection: 31: 400 East & Crossroads Blvd, Interval #1

Movement	EB	EB	EB	EB	WB	WB	WB	WB	NB	NB	NB	SB
Directions Served	L	T	T	R	L	T	T	R	L	T	R	L
Maximum Queue (ft)	69	48	68	6	86	172	158	25	53	26	43	73
Average Queue (ft)	33	19	40	1	42	113	98	10	21	7	19	34
95th Queue (ft)	70	53	76	6	90	182	164	26	56	27	46	73
Link Distance (ft)		1518	1518			1659	1659			443		
Upstream Blk Time (%)												
Queuing Penalty (veh)												
Storage Bay Dist (ft)	150			150	150			100	150		150	150
Storage Blk Time (%)					0	1	5					
Queuing Penalty (veh)					2	1	4					

Intersection: 31: 400 East & Crossroads Blvd, Interval #1

Movement	SB	SB
Directions Served	T	R
Maximum Queue (ft)	61	62
Average Queue (ft)	26	33
95th Queue (ft)	61	63
Link Distance (ft)	729	
Upstream Blk Time (%)		
Queuing Penalty (veh)		
Storage Bay Dist (ft)		150
Storage Blk Time (%)		
Queuing Penalty (veh)		

Intersection: 31: 400 East & Crossroads Blvd, Interval #2

Movement	EB	EB	EB	EB	WB	WB	WB	WB	NB	NB	NB	SB
Directions Served	L	T	T	R	L	T	T	R	L	T	R	L
Maximum Queue (ft)	68	61	77	16	84	190	191	24	49	22	38	71
Average Queue (ft)	36	22	43	4	42	126	121	10	24	7	20	35
95th Queue (ft)	76	61	88	17	87	199	200	29	58	25	43	74
Link Distance (ft)		1518	1518			1659	1659			443		
Upstream Blk Time (%)												
Queuing Penalty (veh)												
Storage Bay Dist (ft)	150			150	150			100	150		150	150
Storage Blk Time (%)			0			3	8					
Queuing Penalty (veh)			0			3	7					

Intersection: 31: 400 East & Crossroads Blvd, Interval #2

Movement	SB	SB
Directions Served	T	R
Maximum Queue (ft)	66	71
Average Queue (ft)	31	36
95th Queue (ft)	73	68
Link Distance (ft)	729	
Upstream Blk Time (%)		
Queuing Penalty (veh)		
Storage Bay Dist (ft)		150
Storage Blk Time (%)		
Queuing Penalty (veh)		

Intersection: 31: 400 East & Crossroads Blvd, Interval #3

Movement	EB	EB	EB	EB	WB	WB	WB	WB	NB	NB	NB	SB
Directions Served	L	T	T	R	L	T	T	R	L	T	R	L
Maximum Queue (ft)	78	47	73	6	98	166	163	25	41	29	38	76
Average Queue (ft)	30	14	39	1	52	118	108	11	17	10	18	39
95th Queue (ft)	70	46	77	7	105	189	186	27	44	32	45	85
Link Distance (ft)		1518	1518			1659	1659			443		
Upstream Blk Time (%)												
Queuing Penalty (veh)												
Storage Bay Dist (ft)	150			150	150			100	150		150	150
Storage Blk Time (%)	0				0	2	7					
Queuing Penalty (veh)	1				0	2	5					

Intersection: 31: 400 East & Crossroads Blvd, Interval #3

Movement	SB	SB
Directions Served	T	R
Maximum Queue (ft)	63	63
Average Queue (ft)	29	30
95th Queue (ft)	65	60
Link Distance (ft)	729	
Upstream Blk Time (%)		
Queuing Penalty (veh)		
Storage Bay Dist (ft)		150
Storage Blk Time (%)		
Queuing Penalty (veh)		

Intersection: 31: 400 East & Crossroads Blvd, Interval #4

Movement	EB	EB	EB	EB	WB	WB	WB	WB	NB	NB	NB	SB
Directions Served	L	T	T	R	L	T	T	R	L	T	R	L
Maximum Queue (ft)	70	46	75	18	91	182	175	29	51	27	49	80
Average Queue (ft)	32	16	41	3	47	113	106	11	22	7	20	37
95th Queue (ft)	68	47	80	18	94	184	185	30	56	26	49	80
Link Distance (ft)		1518	1518			1659	1659			443		
Upstream Blk Time (%)												
Queuing Penalty (veh)												
Storage Bay Dist (ft)	150			150	150			100	150		150	150
Storage Blk Time (%)						3	8					
Queuing Penalty (veh)						2	6					

Intersection: 31: 400 East & Crossroads Blvd, Interval #4

Movement	SB	SB
Directions Served	T	R
Maximum Queue (ft)	63	66
Average Queue (ft)	25	33
95th Queue (ft)	62	62
Link Distance (ft)	729	
Upstream Blk Time (%)		
Queuing Penalty (veh)		
Storage Bay Dist (ft)		150
Storage Blk Time (%)		
Queuing Penalty (veh)		

Intersection: 31: 400 East & Crossroads Blvd, All Intervals

Movement	EB	EB	EB	EB	WB	WB	WB	WB	NB	NB	NB	SB
Directions Served	L	T	T	R	L	T	T	R	L	T	R	L
Maximum Queue (ft)	94	71	91	24	119	212	209	37	66	40	57	92
Average Queue (ft)	33	18	41	2	46	118	108	11	21	8	19	36
95th Queue (ft)	71	52	80	13	95	189	185	28	54	28	46	78
Link Distance (ft)		1518	1518			1659	1659			443		
Upstream Blk Time (%)												
Queuing Penalty (veh)												
Storage Bay Dist (ft)	150			150	150			100	150		150	150
Storage Blk Time (%)	0		0		0	2	7					
Queuing Penalty (veh)	0		0		1	2	5					

Intersection: 31: 400 East & Crossroads Blvd, All Intervals

Movement	SB	SB
Directions Served	T	R
Maximum Queue (ft)	86	84
Average Queue (ft)	28	33
95th Queue (ft)	66	64
Link Distance (ft)	729	
Upstream Blk Time (%)		
Queuing Penalty (veh)		
Storage Bay Dist (ft)		150
Storage Blk Time (%)		
Queuing Penalty (veh)		

Intersection: 34: Crossroads Blvd, Interval #1

Movement
Directions Served
Maximum Queue (ft)
Average Queue (ft)
95th Queue (ft)
Link Distance (ft)
Upstream Blk Time (%)
Queuing Penalty (veh)
Storage Bay Dist (ft)
Storage Blk Time (%)
Queuing Penalty (veh)

Intersection: 34: Crossroads Blvd, Interval #2

Movement
Directions Served
Maximum Queue (ft)
Average Queue (ft)
95th Queue (ft)
Link Distance (ft)
Upstream Blk Time (%)
Queuing Penalty (veh)
Storage Bay Dist (ft)
Storage Blk Time (%)
Queuing Penalty (veh)

Intersection: 34: Crossroads Blvd, Interval #3

Movement
Directions Served
Maximum Queue (ft)
Average Queue (ft)
95th Queue (ft)
Link Distance (ft)
Upstream Blk Time (%)
Queuing Penalty (veh)
Storage Bay Dist (ft)
Storage Blk Time (%)
Queuing Penalty (veh)

Intersection: 34: Crossroads Blvd, Interval #4

Movement
Directions Served
Maximum Queue (ft)
Average Queue (ft)
95th Queue (ft)
Link Distance (ft)
Upstream Blk Time (%)
Queuing Penalty (veh)
Storage Bay Dist (ft)
Storage Blk Time (%)
Queuing Penalty (veh)

Intersection: 34: Crossroads Blvd, All Intervals

Movement
Directions Served
Maximum Queue (ft)
Average Queue (ft)
95th Queue (ft)
Link Distance (ft)
Upstream Blk Time (%)
Queuing Penalty (veh)
Storage Bay Dist (ft)
Storage Blk Time (%)
Queuing Penalty (veh)

Intersection: 38: , Interval #1

Movement	EB	EB	EB	WB	WB	WB	NB	NB	NB	NB	SB	SB
Directions Served	L	T	R	L	T	R	L	L	T	TR	L	T
Maximum Queue (ft)	648	214	195	123	127	82	152	163	274	282	299	573
Average Queue (ft)	423	85	130	78	66	49	95	104	160	183	176	417
95th Queue (ft)	681	214	206	131	130	83	162	170	289	304	366	609
Link Distance (ft)	950	950			451				1485	1485		2121
Upstream Blk Time (%)												
Queuing Penalty (veh)												
Storage Bay Dist (ft)			150	150		150	200	200			150	
Storage Blk Time (%)		1	7	1	0		0	0	4		1	33
Queuing Penalty (veh)		3	5	1	0		2	2	13		5	49

Intersection: 38: , Interval #1

Movement	SB	SB
Directions Served	T	R
Maximum Queue (ft)	587	349
Average Queue (ft)	416	219
95th Queue (ft)	628	455
Link Distance (ft)	2121	
Upstream Blk Time (%)		
Queuing Penalty (veh)		
Storage Bay Dist (ft)		150
Storage Blk Time (%)	32	1
Queuing Penalty (veh)	118	5

Intersection: 38: , Interval #2

Movement	EB	EB	EB	WB	WB	WB	NB	NB	NB	NB	SB	SB
Directions Served	L	T	R	L	T	R	L	L	T	TR	L	T
Maximum Queue (ft)	969	964	170	150	170	122	161	212	302	328	299	732
Average Queue (ft)	868	513	99	85	81	70	107	121	185	204	184	533
95th Queue (ft)	1062	1218	192	159	168	121	170	213	310	336	365	780
Link Distance (ft)	950	950			451				1485	1485		2121
Upstream Blk Time (%)	44	27										
Queuing Penalty (veh)	0	0										
Storage Bay Dist (ft)			150	150		150	200	200			150	
Storage Blk Time (%)		1	6	3	2	0	0	0	4		5	40
Queuing Penalty (veh)		1	5	6	5	0	1	1	17		47	63

Intersection: 38: , Interval #2

Movement	SB	SB
Directions Served	T	R
Maximum Queue (ft)	759	350
Average Queue (ft)	536	254
95th Queue (ft)	803	479
Link Distance (ft)	2121	
Upstream Blk Time (%)		
Queuing Penalty (veh)		
Storage Bay Dist (ft)		150
Storage Blk Time (%)	39	0
Queuing Penalty (veh)	158	0

Intersection: 38: , Interval #3

Movement	EB	EB	EB	WB	WB	WB	NB	NB	NB	NB	SB	SB
Directions Served	L	T	R	L	T	R	L	L	T	TR	L	T
Maximum Queue (ft)	973	974	198	140	137	116	162	170	278	296	299	753
Average Queue (ft)	966	965	116	82	65	55	104	113	184	203	166	626
95th Queue (ft)	974	979	241	151	148	110	174	180	293	310	351	1051
Link Distance (ft)	950	950			451				1485	1485		2121
Upstream Blk Time (%)	93	74										
Queuing Penalty (veh)	0	0										
Storage Bay Dist (ft)			150	150		150	200	200			150	
Storage Blk Time (%)			10	1	1	0	1	1	5		3	40
Queuing Penalty (veh)			8	1	2	0	3	3	17		26	59

Intersection: 38: , Interval #3

Movement	SB	SB
Directions Served	T	R
Maximum Queue (ft)	766	350
Average Queue (ft)	631	248
95th Queue (ft)	1068	479
Link Distance (ft)	2121	
Upstream Blk Time (%)		
Queuing Penalty (veh)		
Storage Bay Dist (ft)		150
Storage Blk Time (%)	40	0
Queuing Penalty (veh)	148	1

Intersection: 38: , Interval #4

Movement	EB	EB	EB	WB	WB	WB	NB	NB	NB	NB	SB	SB
Directions Served	L	T	R	L	T	R	L	L	T	TR	L	T
Maximum Queue (ft)	970	976	169	125	116	95	140	149	261	276	278	572
Average Queue (ft)	966	961	86	76	64	51	88	94	160	178	180	426
95th Queue (ft)	974	1004	189	139	127	93	145	153	255	276	355	642
Link Distance (ft)	950	950			451				1485	1485		2121
Upstream Blk Time (%)	92	73										
Queuing Penalty (veh)	0	0										
Storage Bay Dist (ft)			150	150		150	200	200			150	
Storage Blk Time (%)		0	5	1	0	0	0	0	2		4	33
Queuing Penalty (veh)		0	4	3	0	0	0	2	8		36	49

Intersection: 38: , Interval #4

Movement	SB	SB
Directions Served	T	R
Maximum Queue (ft)	579	350
Average Queue (ft)	416	183
95th Queue (ft)	654	422
Link Distance (ft)	2121	
Upstream Blk Time (%)		
Queuing Penalty (veh)		
Storage Bay Dist (ft)		150
Storage Blk Time (%)	33	0
Queuing Penalty (veh)	122	2

Intersection: 38: , All Intervals

Movement	EB	EB	EB	WB	WB	WB	NB	NB	NB	NB	SB	SB
Directions Served	L	T	R	L	T	R	L	L	T	TR	L	T
Maximum Queue (ft)	976	981	238	180	195	134	202	241	343	356	300	848
Average Queue (ft)	806	631	108	80	69	56	99	108	172	192	176	500
95th Queue (ft)	1210	1332	212	146	145	104	164	182	289	309	360	818
Link Distance (ft)	950	950			451				1485	1485		2121
Upstream Blk Time (%)	57	44										
Queuing Penalty (veh)	0	0										
Storage Bay Dist (ft)			150	150		150	200	200			150	
Storage Blk Time (%)		0	7	1	1	0	0	0	4		3	37
Queuing Penalty (veh)		1	5	3	2	0	1	2	14		28	55

Intersection: 38: , All Intervals

Movement	SB	SB
Directions Served	T	R
Maximum Queue (ft)	888	350
Average Queue (ft)	500	226
95th Queue (ft)	836	464
Link Distance (ft)	2121	
Upstream Blk Time (%)		
Queuing Penalty (veh)		
Storage Bay Dist (ft)		150
Storage Blk Time (%)	36	0
Queuing Penalty (veh)	136	2

Network Summary

Network wide Queuing Penalty, Interval #1: 1537
Network wide Queuing Penalty, Interval #2: 1958
Network wide Queuing Penalty, Interval #3: 1724
Network wide Queuing Penalty, Interval #4: 1620
Network wide Queuing Penalty, All Intervals: 1710

HALES ENGINEERING
innovative transportation solutions

APPENDIX C

Site Plan

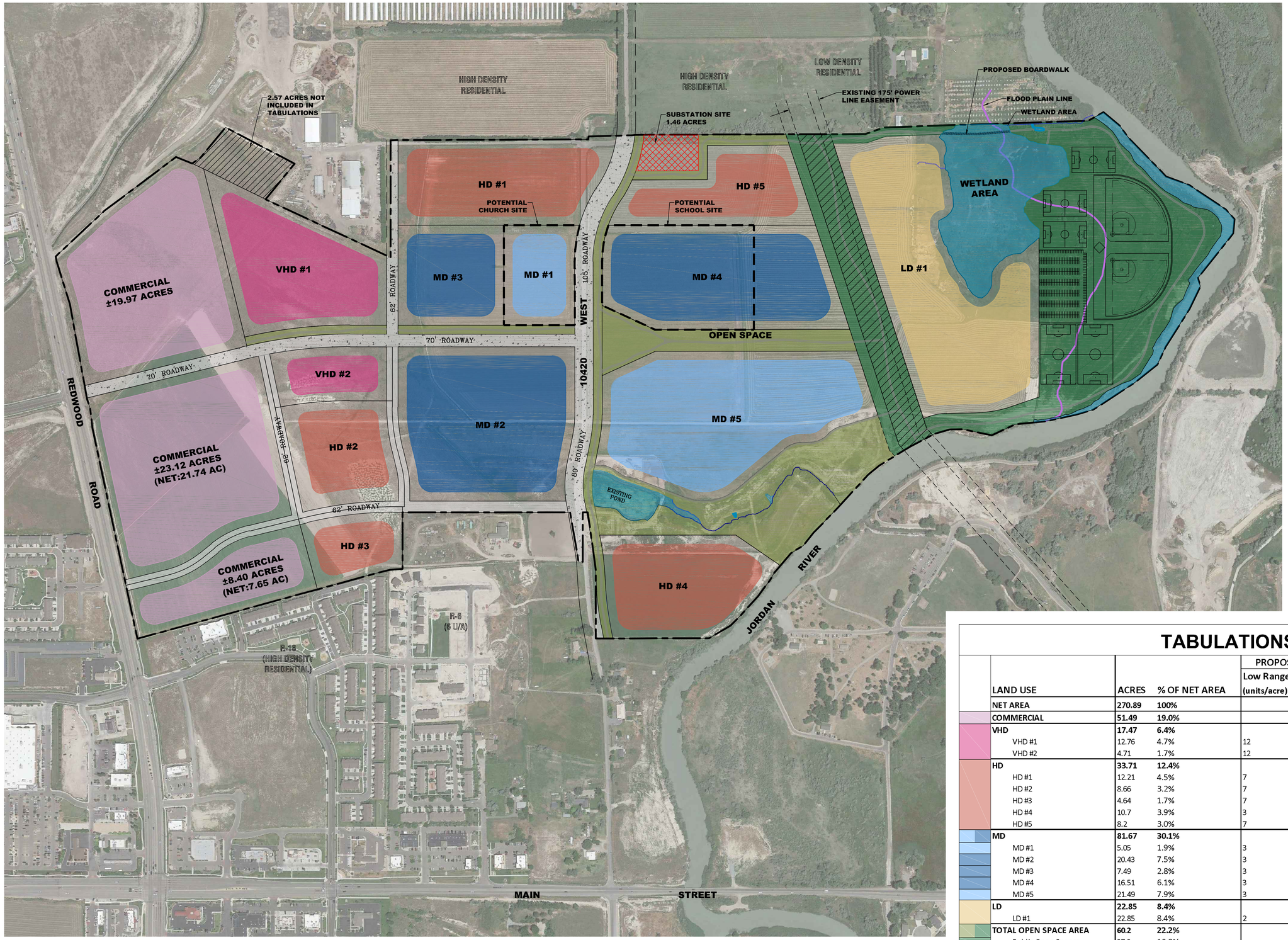

TABULATIONS

LAND USE	ACRES	% OF NET AREA	PROPOSED DENSITY Low Range (units/acre)	PROPOSED DENSITY High Range (units/acre)	PROPOSED UNITS Low Range (Units)	PROPOSED UNITS High Range (Units)
NET AREA	**270.89**	**100%**				
COMMERCIAL	**51.49**	**19.0%**				
VHD	**17.47**	**6.4%**				
VHD #1	12.76	4.7%	12	20	153	255
VHD #2	4.71	1.7%	12	20	57	94
HD	**33.71**	**12.4%**				
HD #1	12.21	4.5%	7	12	85	147
HD #2	8.66	3.2%	7	12	61	104
HD #3	4.64	1.7%	7	12	32	56
HD #4	10.7	3.9%	3	8	32	86
HD #5	8.2	3.0%	7	12	57	98
MD	**81.67**	**30.1%**				
MD #1	5.05	1.9%	3	8	15	40
MD #2	20.43	7.5%	3	8	61	163
MD #3	7.49	2.8%	3	8	22	60
MD #4	16.51	6.1%	3	8	50	132
MD #5	21.49	7.9%	3	8	64	172
LD	**22.85**	**8.4%**				
LD #1	22.85	8.4%	2	4	46	91
TOTAL OPEN SPACE AREA	**60.2**	**22.2%**				
Public Open Spance	37.3	13.8%				
Private Open Space	22.9	8.5%				
TOTAL RESIDENTIAL UNITS ALLOWED		**1138**				

LEI
- A Utah Corporation -
ENGINEERS
SURVEYORS
PLANNERS
3302 N. Main Street
Spanish Fork, UT 84660
Phone: 801.798.0555
Fax: 801.798.9393
office@lei-eng.com
www.lei-eng.com

NOT FOR CONSTRUCTION

ALLRED PROPERTY

LEHI, UTAH

LAND USE PLAN

REVISIONS
1 -
2 -
3 -
4 -
5 -

LEI PROJECT #: 2015-0125
DRAWN BY: BAP
CHECKED BY: BTG
SCALE: 1" = 250'
DATE: 6/30/2016

SHEET 1

U:\0_LEI PROJECTS\2015\2015-0125 DR HORTON - ALLRED PROPERTY LEHI\CAD\15-0125 BUBBLE CONCEPT 4 NO SHANE.DWG 6/30/2016 2:37 PM

HALES ENGINEERING
innovative transportation solutions

APPENDIX D

95th Percentile Queue Length Reports

SimTraffic Queueing Report

Project: Saratoga Springs - Cold Spring Ranch

Time Period: Evening Peak Hour

95th Percentile Queue Length (feet)

HALES ENGINEERING
Innovative transportation solutions

Project #: UT16-928

Intersection	Time Period	B5	B6	EB					NB					SB						WB			
		T	T	L	LR	LT	R	T	L	LT	LTR	R	T	L	LT	LTR	R	T	TR	L	LT	R	T
3600 West & 2100 North EB	Existing (2016) Background	--	--	--	--	--	2	2	--	--	--	42	20	--	67	--	--	--	--	--	--	--	--
3600 West & 2100 North WB	Existing (2016) Background	--	--	--	--	--	--	--	--	27	--	--	--	--	--	--	--	--	37	--	--	--	--
400 East & Crossroads Blvd	Existing (2016) Background	--	--	--	--	66	4	--	--	--	39	--	--	--	--	57	--	--	--	--	77	--	--
Redwood Road & Aspen Hills Blvd	Existing (2016) Background	9	--	--	167	--	--	--	64	--	--	--	27	--	--	--	2	--	--	--	--	--	--
Redwood Road & Commerce Drive	Existing (2016) Background	--	--	190	--	--	97	155	108	--	--	20	344	300	--	--	315	524	--	57	--	63	69
Redwood Road & Crossroads Blvd	Existing (2016) Background	--	--	203	--	--	30	87	190	--	--	42	269	196	--	--	178	394	--	127	--	81	140
Redwood Road & Sergeant Court Drive	Existing (2016) Background	--	40	34	--	--	185	--	57	--	--	--	27	--	--	--	2	155	--	--	--	--	--

SimTraffic Queueing Report

Project: Saratoga Springs - Cold Spring Ranch

Time Period: Evening Peak Hour

95th Percentile Queue Length (feet)

HALES ENGINEERING
innovative transportation solutions

Project #: UT16-928

Intersection	Time Period	EB					NB						SB						WB			
		L	LT	LTR	R	T	L	LT	LTR	R	T	TR	L	LT	LTR	R	T	TR	L	LT	R	T
3600 West & 2100 North EB	Existing (2016) Plus Project	--	--	--	6	2	--	--	--	76	722	--	--	204	--	--	--	--	--	--	--	--
3600 West & 2100 North WB	Existing (2016) Plus Project	--	--	--	--	--	--	74	--	--	--	--	--	--	--	--	--	41	14	--	--	--
400 East & Crossroads Blvd	Existing (2016) Plus Project	--	128	--	--	--	--	--	37	--	--	--	--	--	103	--	--	--	--	123	43	--
Redwood Road & Aspen Hills Blvd	Existing (2016) Plus Project	--	--	684	--	--	118	--	--	21	38	--	282	--	--	1	521	--	198	--	40	872
Redwood Road & Commerce Drive	Existing (2016) Plus Project	190	--	--	101	143	161	--	--	94	411	--	201	--	--	311	480	--	52	--	77	67
Redwood Road & Crossroads Blvd	Existing (2016) Plus Project	242	--	--	30	90	194	--	--	44	319	--	185	--	--	165	350	--	135	--	120	146
Redwood Road & Sergeant Court Driv	Existing (2016) Plus Project	--	410	--	61	--	88	--	--	--	154	147	189	--	--	45	174	--	--	798	110	--

SimTraffic Queueing Report

Project: Saratoga Springs - Cold Spring Ranch

Time Period: Evening Peak Hour

95th Percentile Queue Length (feet)

HALES ENGINEERING
Innovative transportation solutions

Project #: UT16-928

Intersection	Time Period	EB				NB						SB						WB			
		L	LT	R	T	L	LT	LTR	R	T	TR	L	LT	LTR	R	T	TR	L	LT	R	T
3600 West & 2100 North EB	Existing (2016) Plus Project - Mitigated	--	--	4	4	--	--	--	74	77	--	--	207	--	--	--	--	--	--	--	--
3600 West & 2100 North WB	Existing (2016) Plus Project - Mitigated	--	--	--	--	--	70	--	--	--	--	--	--	--	--	--	41	19	--	--	--
400 East & Crossroads Blvd	Existing (2016) Plus Project - Mitigated	--	120	3	--	--	--	40	--	--	--	--	--	108	--	--	--	--	114	2	--
Redwood Road & Aspen Hills Blvd	Existing (2016) Plus Project - Mitigated	25	--	42	--	121	--	--	136	298	--	362	--	--	85	511	--	282	--	191	239
Redwood Road & Commerce Drive	Existing (2016) Plus Project - Mitigated	185	--	105	144	194	--	--	85	459	--	365	--	--	341	597	--	57	--	74	72
Redwood Road & Crossroads Blvd	Existing (2016) Plus Project - Mitigated	232	--	38	91	208	--	--	44	337	--	229	--	--	172	499	--	132	--	119	139
Redwood Road & Sergeant Court Driv	Existing (2016) Plus Project - Mitigated	--	292	57	--	64	--	--	--	44	18	198	--	--	70	534	--	--	210	133	--

SimTraffic Queueing Report

Project: Saratoga Springs - Cold Spring Ranch

Time Period: Evening Peak Hour

95th Percentile Queue Length (feet)

HALES ENGINEERING
Innovative transportation solutions

Project #: UT16-928

Intersection	Time Period	B5	B6	EB					NB				SB				WB			
		T	T	L	LR	LT	R	T	L	LTR	R	T	L	LT	R	T	L	LT	R	T
3600 West & 2100 North EB	Future (2020) Background	--	--	100	--	--	44	141	--	--	88	51	284	--	--	128	--	--	--	--
3600 West & 2100 North WB	Future (2020) Background	--	--	--	--	--	--	--	57	--	--	74	--	--	353	610	95	--	176	154
400 East & Crossroads Blvd	Future (2020) Background	--	--	--	--	163	--	--	--	62	--	--	--	81	49	--	--	191	4	--
Redwood Road & Aspen Hills Blvd	Future (2020) Background	189	--	--	558	--	--	--	86	--	--	46	--	--	9	--	--	--	--	--
Redwood Road & Commerce Drive	Future (2020) Background	--	--	223	--	--	150	260	165	--	75	374	281	--	347	542	64	--	64	60
Redwood Road & Crossroads Blvd	Future (2020) Background	--	--	218	--	--	38	117	217	--	46	300	253	--	229	557	163	--	99	167
Redwood Road & Sergeant Court Driv	Future (2020) Background	--	30	47	--	--	356	--	127	--	--	179	--	--	--	147	--	--	--	--

SimTraffic Queueing Report

Project: Saratoga Springs - Cold Spring Ranch

Time Period: Evening Peak Hour

95th Percentile Queue Length (feet)

HALES ENGINEERING
Innovative transportation solutions

Project #: UT16-928

Intersection	Time Period	EB				NB				SB				WB			
		L	LT	R	T	L	LTR	R	T	L	LT	R	T	L	LT	R	T
3600 West & 2100 North EB	Future (2020) Plus Project	106	--	72	140	--	--	215	177	239	--	--	281	--	--	--	--
3600 West & 2100 North WB	Future (2020) Plus Project	--	--	--	--	105	--	--	71	--	--	388	708	156	--	173	155
400 East & Crossroads Blvd	Future (2020) Plus Project	--	314	51	--	--	107	--	--	--	477	170	--	--	398	71	--
Redwood Road & Aspen Hills Blvd	Future (2020) Plus Project	33	--	46	--	146	--	229	433	448	--	321	813	216	--	213	78
Redwood Road & Commerce Drive	Future (2020) Plus Project	216	--	150	252	305	--	168	499	382	--	344	598	58	--	78	71
Redwood Road & Crossroads Blvd	Future (2020) Plus Project	273	--	39	120	266	--	129	408	432	--	559	1,023	159	--	144	174
Redwood Road & Sergeant Court Drive	Future (2020) Plus Project	--	41	185	--	71	--	15	41	219	--	65	549	--	233	165	--

SimTraffic Queueing Report

Project: Saratoga Springs - Cold Spring Ranch

Time Period: Evening Peak Hour

95th Percentile Queue Length (feet)

HALES ENGINEERING
Innovative transportation solutions

Project #: UT16-928

Intersection	Time Period	EB				NB			SB			WB		
		L	LR	R	T	L	R	T	L	R	T	L	R	T
3600 West & 2100 North EB	Future (2040) Background	143	--	73	138	--	201	208	250	--	368	--	--	--
3600 West & 2100 North WB	Future (2040) Background	--	--	--	--	23	--	161	--	294	440	156	158	149
400 East & Crossroads Blvd	Future (2040) Background	44	--	10	61	51	46	28	58	58	66	93	9	184
Redwood Road & Aspen Hills Blvd	Future (2040) Background	--	59	--	--	59	--	16	--	7	--	--	--	--
Redwood Road & Commerce Drive	Future (2040) Background	214	--	138	237	124	28	203	150	165	268	74	66	63
Redwood Road & Crossroads Blvd	Future (2040) Background	98	--	36	140	175	74	237	125	64	259	196	65	149
Redwood Road & Sergeant Court Drive	Future (2040) Background	22	--	46	--	46	--	24	--	2	--	--	--	--

SimTraffic Queueing Report

Project: Saratoga Springs - Cold Spring Ranch

Time Period: Evening Peak Hour

95th Percentile Queue Length (feet)

HALES ENGINEERING
Innovative transportation solutions

Project #: UT16-928

Intersection	Time Period	EB				NB			SB			WB			
		L	LT	R	T	L	R	T	L	R	T	L	LT	R	T
3600 West & 2100 North EB	Future (2040) Plus Project	139	--	123	139	--	367	267	261	--	97	--	--	--	--
3600 West & 2100 North WB	Future (2040) Plus Project	--	--	--	--	154	--	156	--	323	475	149	--	168	157
400 East & Crossroads Blvd	Future (2040) Plus Project	71	--	13	66	54	46	28	78	64	66	95	--	28	187
Redwood Road & Aspen Hills Blvd	Future (2040) Plus Project	33	--	45	--	88	35	209	213	16	111	183	--	175	46
Redwood Road & Commerce Drive	Future (2040) Plus Project	217	--	135	264	150	71	342	155	169	279	74	--	68	71
Redwood Road & Crossroads Blvd	Future (2040) Plus Project	129	--	30	138	187	83	274	160	67	312	223	--	83	156
Redwood Road & Sergeant Court Drive	Future (2040) Plus Project	--	27	49	--	46	13	17	95	2	17	--	210	118	--

HALES ENGINEERING
innovative transportation solutions

APPENDIX E

Internal Capture Reduction Calculations

NCHRP 8-51 Internal Trip Capture Estimation Tool			
Project Name:	Cold Springs Ranch	**Organization:**	Hales Engineering
Project Location:	Lehi	**Performed By:**	David Chang
Scenario Description:		**Date:**	8/23/2016
Analysis Year:		**Checked By:**	
Analysis Period:	**PM Street Peak Hour**	**Date:**	

Table 1-P: Base Vehicle-Trip Generation Estimates (Single-Use Site Estimate)

Land Use	Development Data (*For Information Only*)			Estimated Vehicle-Trips		
	ITE LUCs[1]	Quantity	Units	Total	Entering	Exiting
Office				0		
Retail				1279	614	665
Restaurant				0		
Cinema/Entertainment				0		
Residential				780	502	278
Hotel				0		
All Other Land Uses[2]				0		
Total				2059	1116	943

Table 2-P: Mode Split and Vehicle Occupancy Estimates

Land Use	Entering Trips			Exiting Trips		
	Veh. Occ.	% Transit	% Non-Motorized	Veh. Occ.	% Transit	% Non-Motorized
Office						
Retail						
Restaurant						
Cinema/Entertainment						
Residential						
Hotel						
All Other Land Uses[2]						

Table 3-P: Average Land Use Interchange Distances (Feet Walking Distance)

Origin (From)	Destination (To)					
	Office	Retail	Restaurant	Cinema/Entertainment	Residential	Hotel
Office						
Retail					1800	
Restaurant						
Cinema/Entertainment						
Residential		1800				
Hotel						

Table 4-P: Internal Person-Trip Origin-Destination Matrix*

Origin (From)	Destination (To)					
	Office	Retail	Restaurant	Cinema/Entertainment	Residential	Hotel
Office		0	0	0	0	0
Retail	0		0	0	119	0
Restaurant	0	0		0	0	0
Cinema/Entertainment	0	0	0		0	0
Residential	0	27	0	0		0
Hotel	0	0	0	0	0	

Table 5-P: Computations Summary

	Total	Entering	Exiting
All Person-Trips	2,059	1,116	943
Internal Capture Percentage	14%	13%	15%
External Vehicle-Trips[3]	1,767	970	797
External Transit-Trips[4]	0	0	0
External Non-Motorized Trips[4]	0	0	0

Table 6-P: Internal Trip Capture Percentages by Land Use

Land Use	Entering Trips	Exiting Trips
Office	N/A	N/A
Retail	4%	18%
Restaurant	N/A	N/A
Cinema/Entertainment	N/A	N/A
Residential	24%	10%
Hotel	N/A	N/A

[1]Land Use Codes (LUCs) from *Trip Generation Informational Report*, published by the Institute of Transportation Engineers.
[2]Total estimate for all other land uses at mixed-use development site-not subject to internal trip capture computations in this estimator
[3]Vehicle-trips computed using the mode split and vehicle occupancy values provided in Table 2-P
[4]Person-Trips
*Indicates computation that has been rounded to the nearest whole number.

Estimation Tool Developed by the Texas Transportation Institute