5. 2 Restroom Construction Documents

UTAH COUNTY PUBLIC WORKS
PARKS DIVISION

THANKSGIVING POINT
RESTROOM DRAWINGS
JUNE 2006

DRAWING INDEX	
DWG NUMBER	DESCRIPTION
1	COVER SHEET
2	SITE PLAN
3	FLOOR PLAN
4	ELECTRICAL PLAN
5	PLUMBING PLAN
6	FOOTING & FOUNDATION PLAN, ROOF FRAMING PLAN
7	WALL SECTION & TRUSS CONNECTION DETAIL
8	COLUMN & GLU-LAM DETAIL
9	ELEVATIONS VIEW

NOTE:

DETAILS AND TYPICALS ARE TO BE FOUND IN THE APWA MANUAL OF STANDARD PLANS AND ALL SPECIFICATIONS ARE TO BE FOUND IN THE APWA MANUAL OF STANDARD SPECIFICATIONS 1997 EDITION.

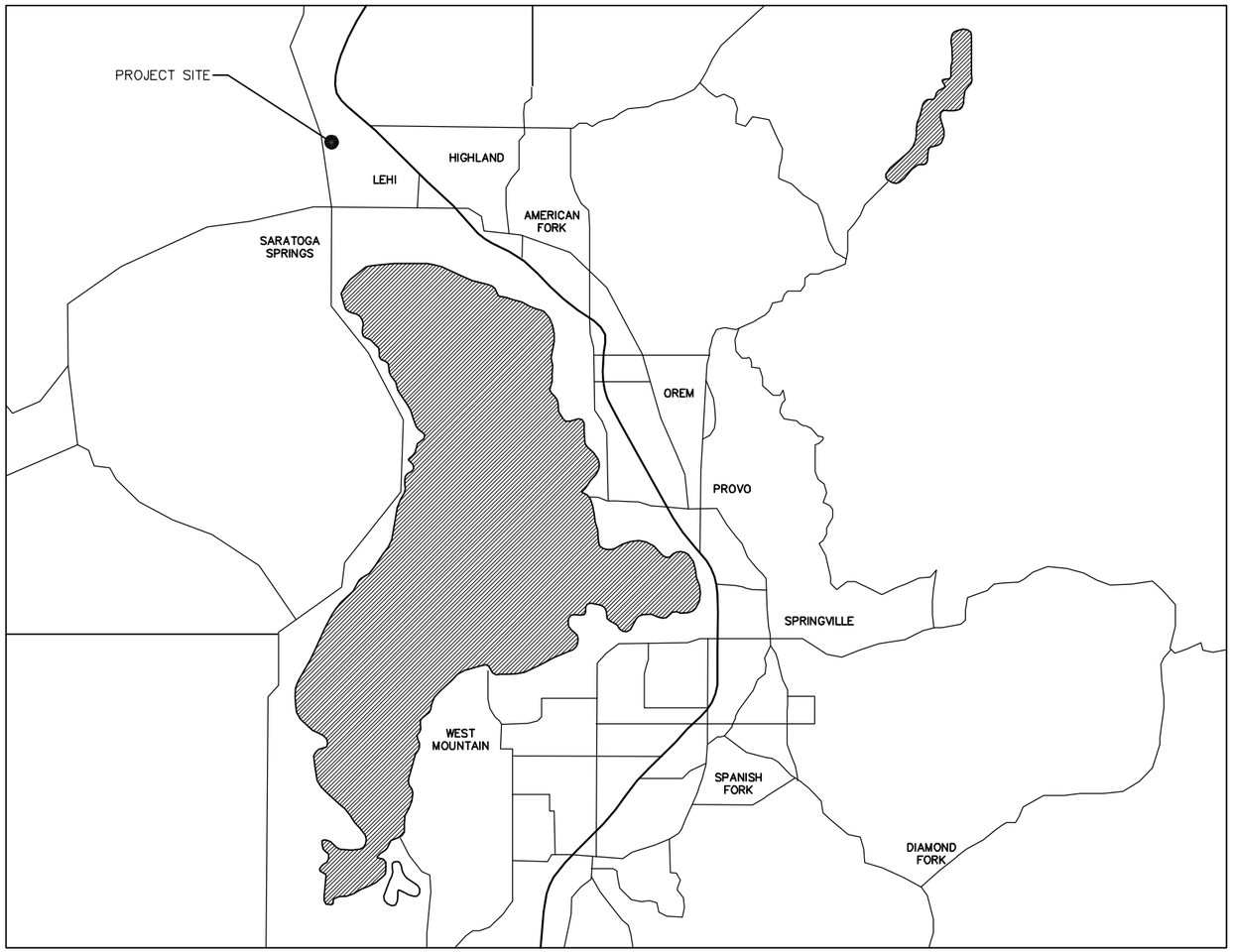

H:\Glen\Drawings\Parks\Thanksgiving Point\dwg\Design\ Restroom.dwg 06/01/06 11:17 glent

You created this PDF from an application that is not licensed to print to novaPDF printer (http://www.novapdf.com)

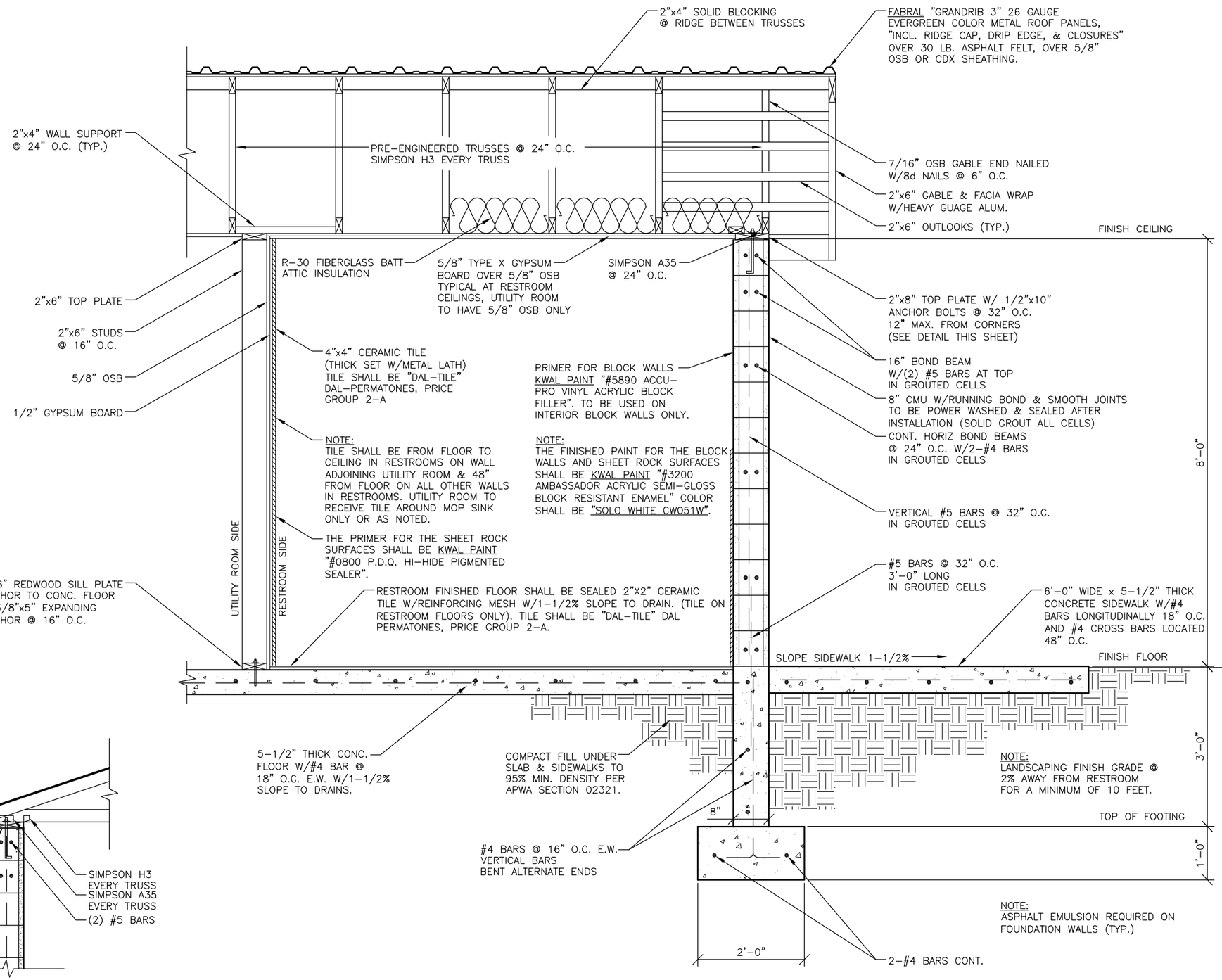

WALL SECTION A-A

SCALE: 1/2" = 1'-0"

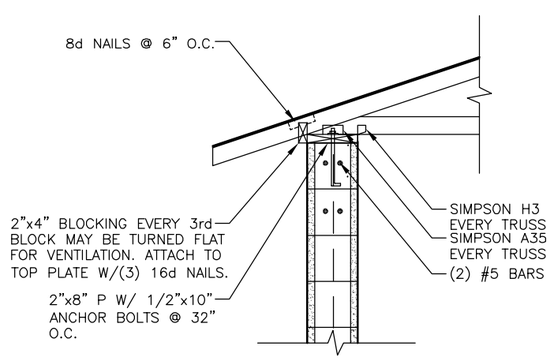

TRUSS CONNECTION DETAIL

SCALE: 1/2" = 1'-0"

UTAH COUNTY ENGINEERS OFFICE
2855 South State Provo, Utah 84606

REVISIONS:

DATE: 06/1/06
SCALE: 1/2"=1'
DRAWN BY: GGT

THANKSGIVING POINT PARK
RESTROOM
WALL SECTION &
TRUSS CONNECTION DETAIL

SHEET NUMBER
7

H:\Glen\Drawings\Parks\Thanksgiving Point\dwg\Design\ Restroom.dwg 06/01/06 11:17 glent

You created this PDF from an application that is not licensed to print to novaPDF printer (http://www.novapdf.com)

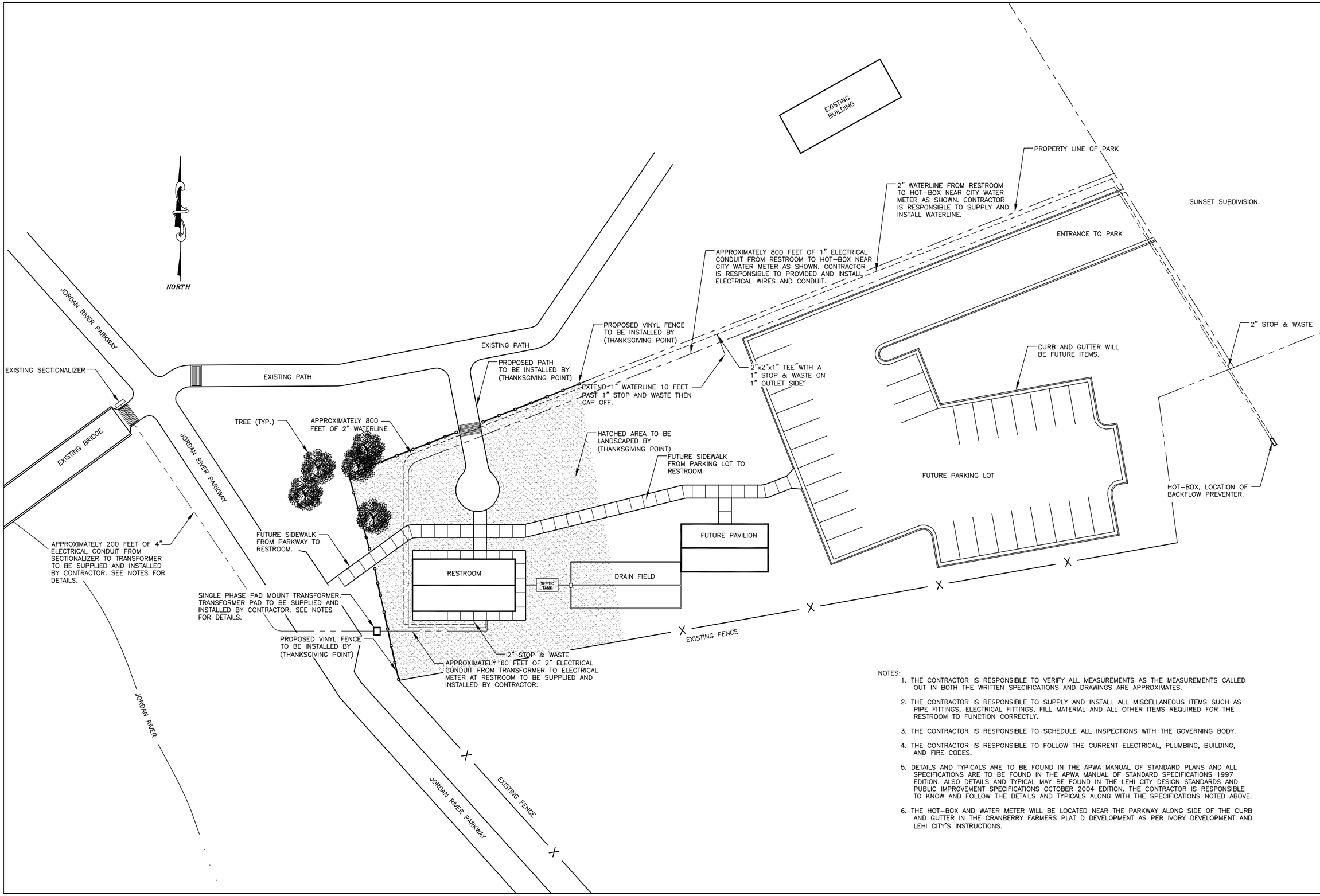

NOTES:

1. THE CONTRACTOR IS RESPONSIBLE TO VERIFY ALL MEASUREMENTS AS THE MEASUREMENTS CALLED OUT IN BOTH THE WRITTEN SPECIFICATIONS AND DRAWINGS ARE APPROXIMATES.
2. THE CONTRACTOR IS RESPONSIBLE TO SUPPLY AND INSTALL ALL MISCELLANEOUS ITEMS SUCH AS PIPE FITTINGS, ELECTRICAL FITTINGS, FILL MATERIAL AND ALL OTHER ITEMS REQUIRED FOR THE RESTROOM TO FUNCTION CORRECTLY.
3. THE CONTRACTOR IS RESPONSIBLE TO SCHEDULE ALL INSPECTIONS WITH THE GOVERNING BODY.
4. THE CONTRACTOR IS RESPONSIBLE TO FOLLOW THE CURRENT ELECTRICAL, PLUMBING, BUILDING, AND FIRE CODES.
5. DETAILS AND TYPICALS ARE TO BE FOUND IN THE APWA MANUAL OF STANDARD PLANS AND ALL SPECIFICATIONS ARE TO BE FOUND IN THE APWA MANUAL OF STANDARD SPECIFICATIONS 1997 EDITION. ALSO DETAILS AND TYPICAL MAY BE FOUND IN THE LEHI CITY DESIGN STANDARDS AND PUBLIC IMPROVEMENT SPECIFICATIONS OCTOBER 2004 EDITION. THE CONTRACTOR IS RESPONSIBLE TO KNOW AND FOLLOW THE DETAILS AND TYPICALS ALONG WITH THE SPECIFICATIONS NOTED ABOVE.
6. THE HOT-BOX AND WATER METER WILL BE LOCATED NEAR THE PARKWAY ALONG SIDE OF THE CURB AND GUTTER IN THE CRANBERRY FARMERS PLAT D DEVELOPMENT AS PER IVORY DEVELOPMENT AND LEHI CITY'S INSTRUCTIONS.

UTAH COUNTY ENGINEERS OFFICE
2855 South State Provo, Utah 84606

REVISIONS:

DATE: 06/1/06
SCALE: 1"=40'
DRAWN BY: GGT

THANKSGIVING POINT PARK
RESTROOM SITE PLAN

SHEET NUMBER
2

H:\Glen\Drawings\Parks\Thanksgiving Point\dwg\Design\ Restroom.dwg 06/01/06 11:17 glent

You created this PDF from an application that is not licensed to print to novaPDF printer (http://www.novapdf.com)

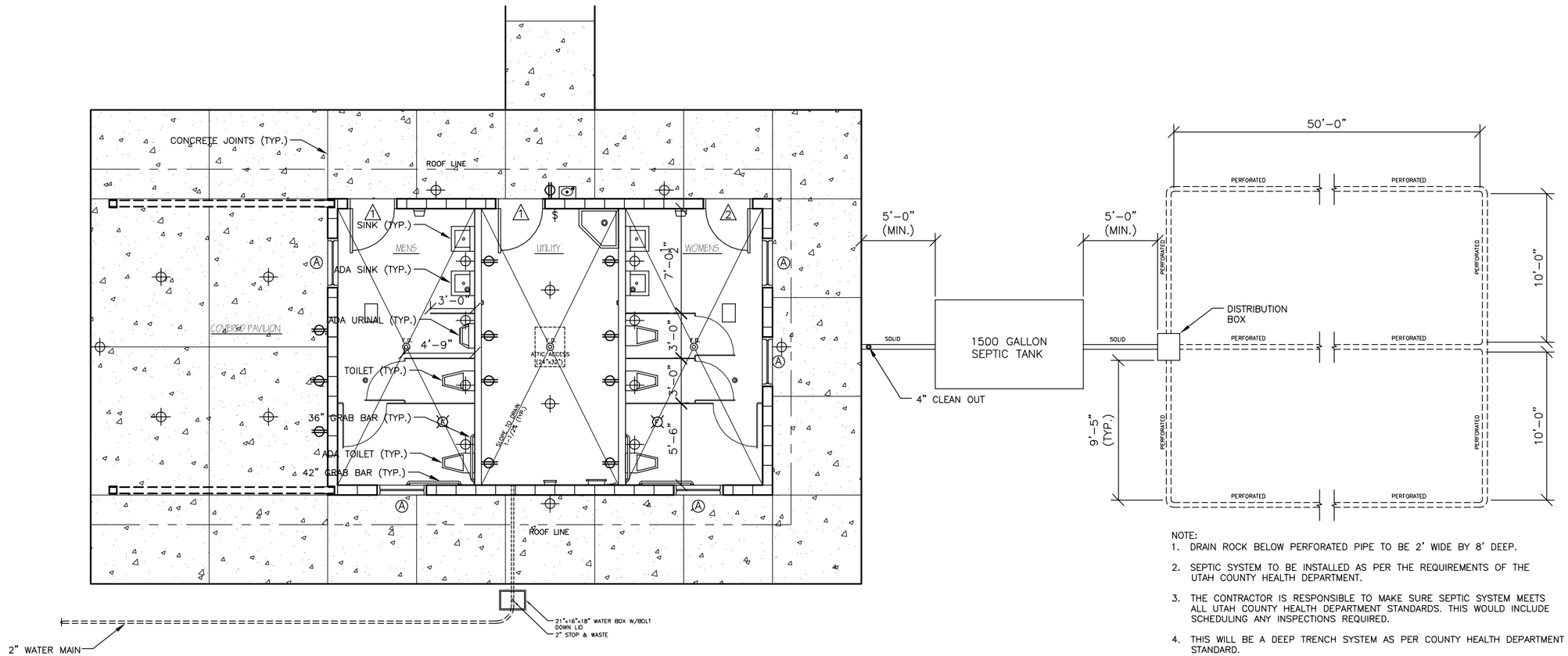

PLUMBING

SCALE: 1/8" = 1'-0"

NOTE:

1. DRAIN ROCK BELOW PERFORATED PIPE TO BE 2' WIDE BY 8' DEEP.
2. SEPTIC SYSTEM TO BE INSTALLED AS PER THE REQUIREMENTS OF THE UTAH COUNTY HEALTH DEPARTMENT.
3. THE CONTRACTOR IS RESPONSIBLE TO MAKE SURE SEPTIC SYSTEM MEETS ALL UTAH COUNTY HEALTH DEPARTMENT STANDARDS. THIS WOULD INCLUDE SCHEDULING ANY INSPECTIONS REQUIRED.
4. THIS WILL BE A DEEP TRENCH SYSTEM AS PER COUNTY HEALTH DEPARTMENT STANDARD.

UTAH COUNTY ENGINEERS OFFICE
2855 South State Provo, Utah 84606

REVISIONS:

DATE: 06/1/06
SCALE: 1/8"=1'
DRAWN BY: GGT

THANKSGIVING POINT PARK
RESTROOM
PLUMBING PLAN

SHEET NUMBER
5

H:\Glen\Drawings\Parks\Thanksgiving Point\dwg\Design\ Restroom.dwg 06/01/06 11:17 glent

You created this PDF from an application that is not licensed to print to novaPDF printer (http://www.novapdf.com)

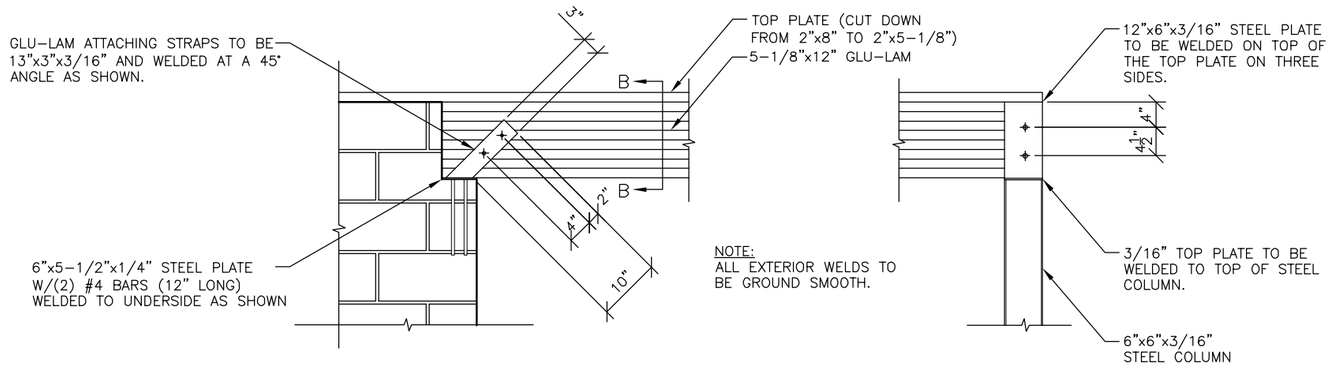

NOTE:
ALL EXTERIOR WELDS TO BE GROUND SMOOTH.

COLUMN DETAIL

SCALE: 1/2" = 1'-0"

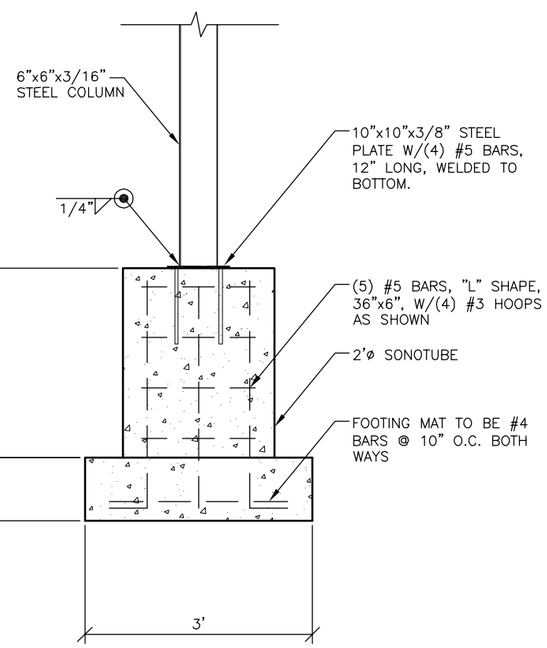

COLUMN/SONOTUBE DETAIL

SCALE: 1/2" = 1'-0"

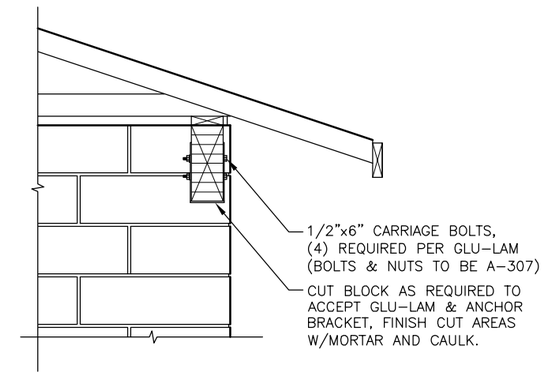

SECTION "BB"

SCALE: 1/2" = 1'-0"

UTAH COUNTY ENGINEERS OFFICE
2855 South State Provo, Utah 84606

REVISIONS:

DATE: 06/1/06
SCALE: 1/2"=1'
DRAWN BY: J.D.M.

THANKSGIVING POINT PARK
RESTROOM
COLUMN & GLU-LAM DETAIL

SHEET NUMBER
8

H:\Glen\Drawings\Parks\Thanksgiving Point\dwg\Design\ Restroom.dwg 06/01/06 11:17 glent

You created this PDF from an application that is not licensed to print to novaPDF printer (http://www.novapdf.com)

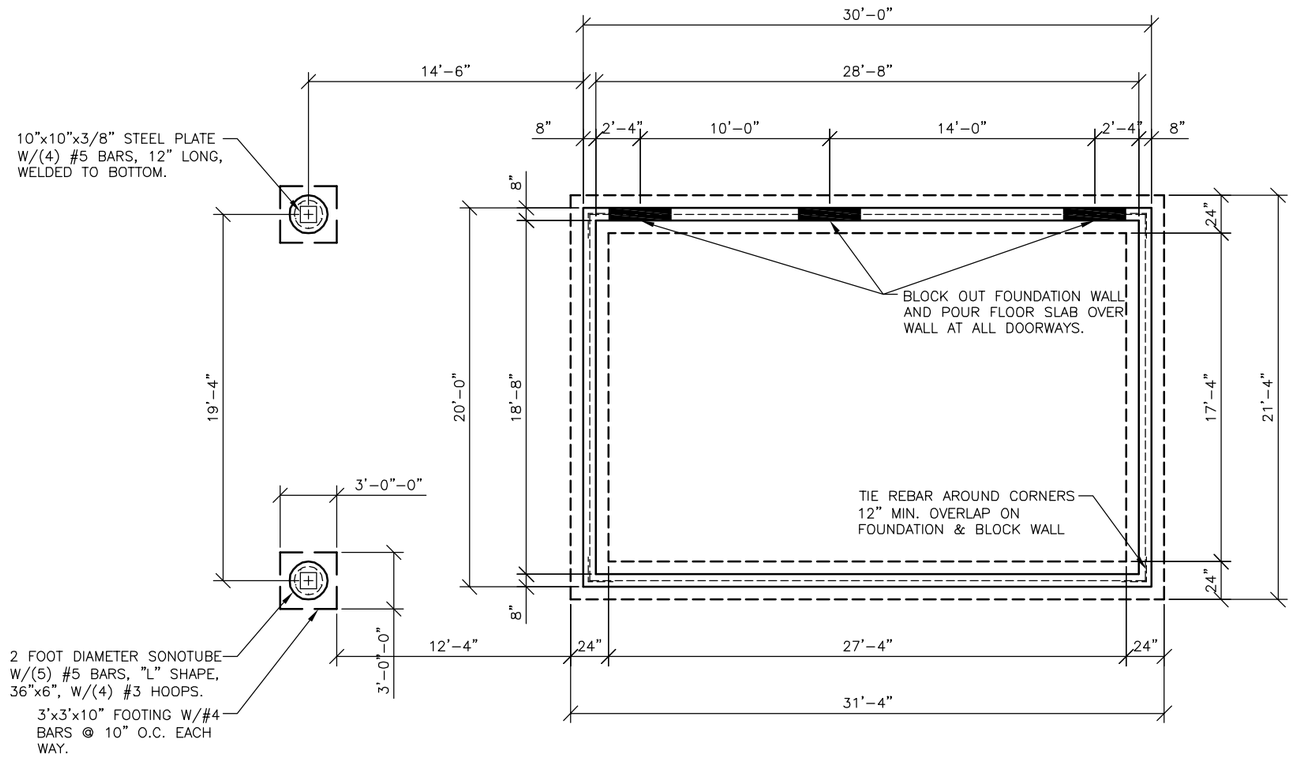

FOOTING & FOUNDATION PLAN

SCALE: 1/8" = 1'-0"

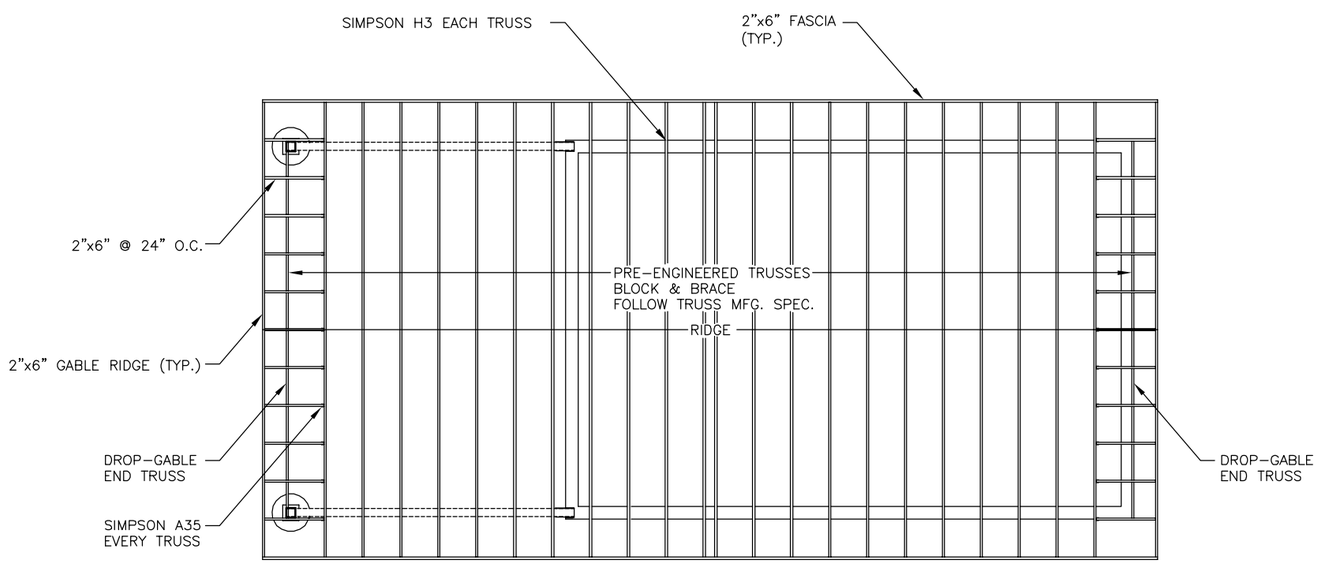

ROOF FRAMING PLAN

SCALE: 1/8" = 1'-0"

NOTE:
ROOF LOADING
LIVE LOAD = 45 PSF
DEAD LOAD TOP CHORD = 15 PSF
DEAD LOAD BOTTOM CHORD = 15 PSF
WIND LOAD (UPLIFT) = 15 PSF

UTAH COUNTY ENGINEERS OFFICE
2855 South State Provo, Utah 84606

REVISIONS:

DATE: 06/1/06
SCALE: 1/8"=1'
DRAWN BY: GGT

THANKSGIVING POINT PARK
RESTROOM
FOOTING & FOUNDATION PLAN
ROOF FRAMING PLAN

SHEET NUMBER
6

H:\Glen\Drawings\Parks\Thanksgiving Point\dwg\Design\ Restroom.dwg 06/01/06 11:17 glent

You created this PDF from an application that is not licensed to print to novaPDF printer (http://www.novapdf.com)

DOOR SCHEDULE			
MARK	SIZE	SWING	No. REQ'D.
1	36" x 84"	RH	1
2	36" x 84"	LH	2

DOOR NOTES

1. DOORS TO BE COMMERCIAL GRADE STEEL.
2. FRAMES TO BE 16 GAUGE STEEL WITH 2" SIDE JAMBS & A 4" HEADER.
3. AUTOMATIC CLOSERS AND KICK PLATES REQUIRED ON ALL DOORS.
4. THRESHOLDS REQUIRED ON ALL DOORS.
5. ALL DOORS TO PRE-PRIMED & PAINTED
6. HARDWARE ON RESTROOM DOORS TO BE PUSH/PULL WITH KEYED DEADBOLTS.
7. HARDWARE ON UTILITY ROOM DOOR TO BE KNOB WITH KEYED DEADBOLT.
8. DOOR BUMPERS ARE REQUIRED FOR ALL DOORS INCLUDING PARTITON DOORS.
9. ALL DOOR HARDWARE MUST BE "BEST" HARDWARE.
10. BEFORE INSTALLATION OF DOOR HARDWARE IT MUST BE PRE-APPROVED IN WRITING.

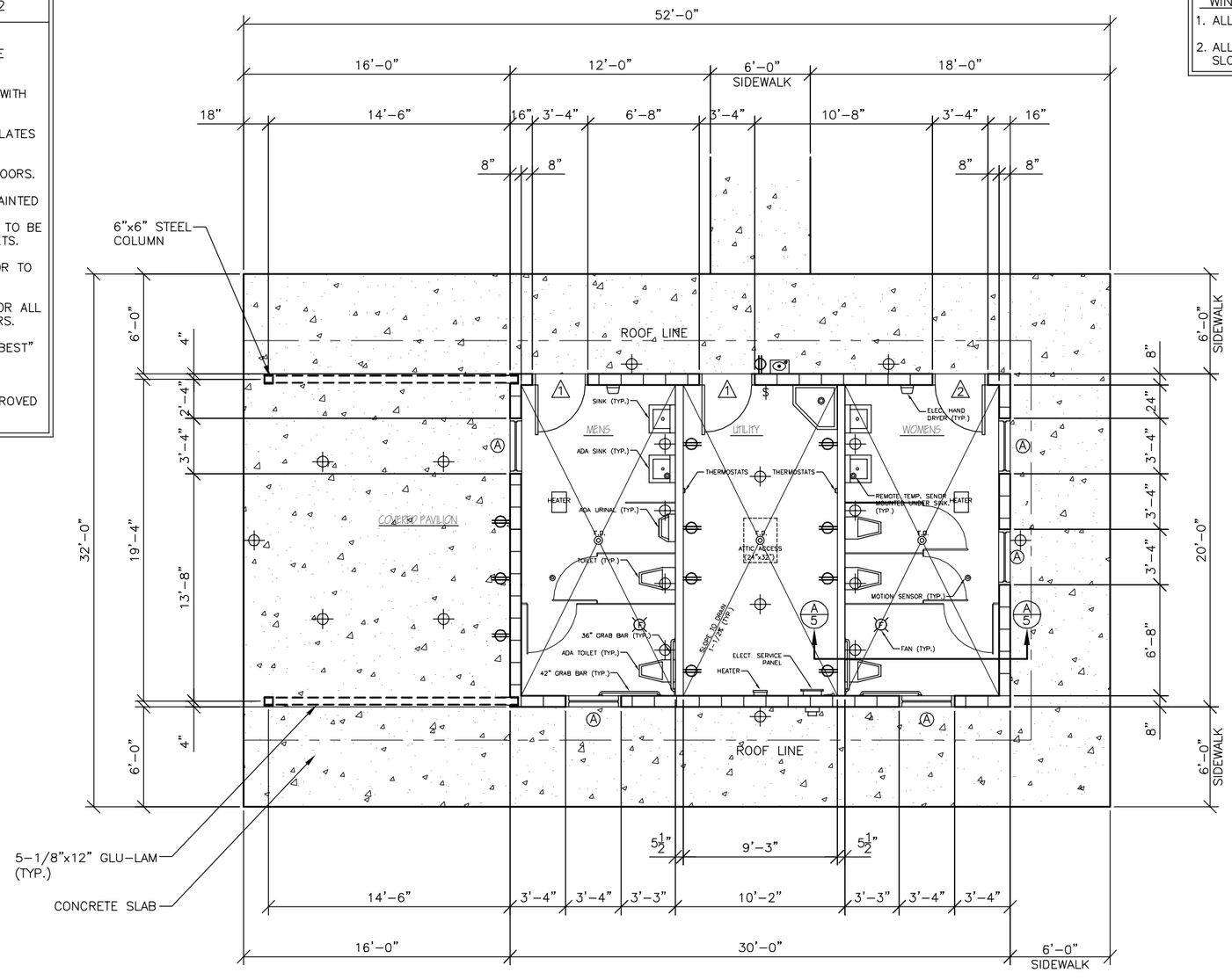

FLOOR PLAN

SCALE: 1/8" = 1'-0"

WINDOW SCHEDULE				
MARK	SIZE	FRAME	GLAZING	No. REQ'D.
A	40" x 16"	VINYL	INSULATED, OPAQUE, & TEMPERED	5

WINDOW NOTES

1. ALL WINDOWS TO BE VINYL FRAMED.
2. ALL LEDGES AT WINDOW OPENINGS TO BE SAND GROUTED & SLOPED AWAY FROM WINDOW

UTAH COUNTY ENGINEERS OFFICE
2855 South State Provo, Utah 84606

REVISIONS:

DATE: 06/1/06
SCALE: 1/8"=1'
DRAWN BY: GGT

THANKSGIVING POINT PARK
RESTROOM FLOOR PLAN

SHEET NUMBER
3

H:\Glen\Drawings\Parks\Thanksgiving Point\dwg\Design\ Restroom.dwg 06/01/06 11:17 glent

You created this PDF from an application that is not licensed to print to novaPDF printer (http://www.novapdf.com)

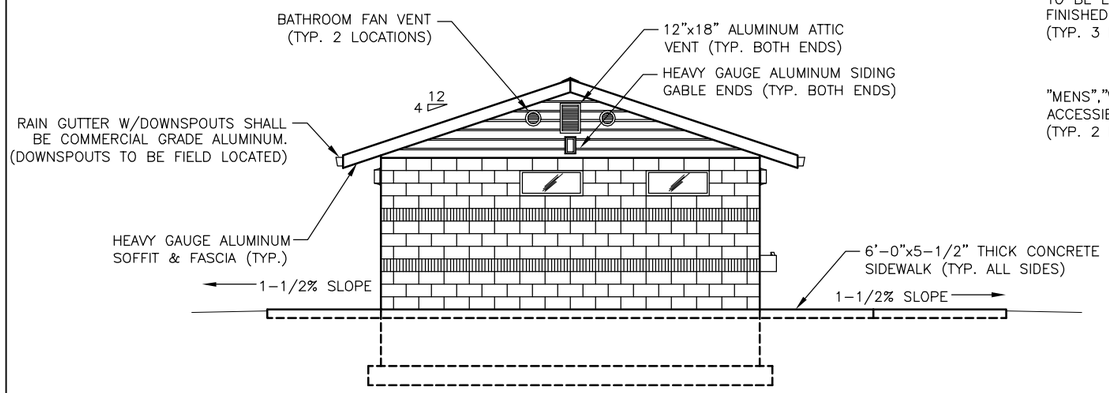

EAST ELEVATION

SCALE: 1/8" = 1'-0"

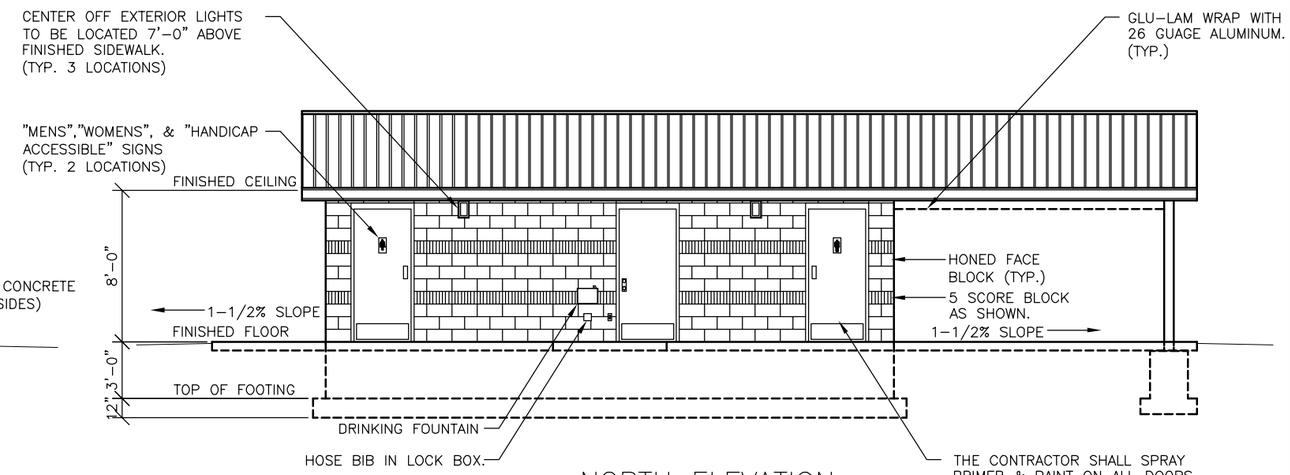

NORTH ELEVATION

SCALE: 1/8" = 1'-0"

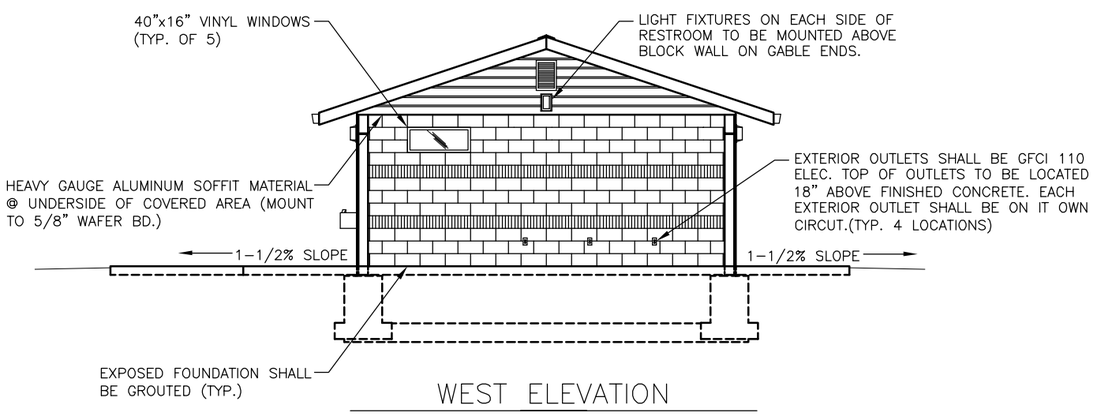

WEST ELEVATION

SCALE: 1/8" = 1'-0"

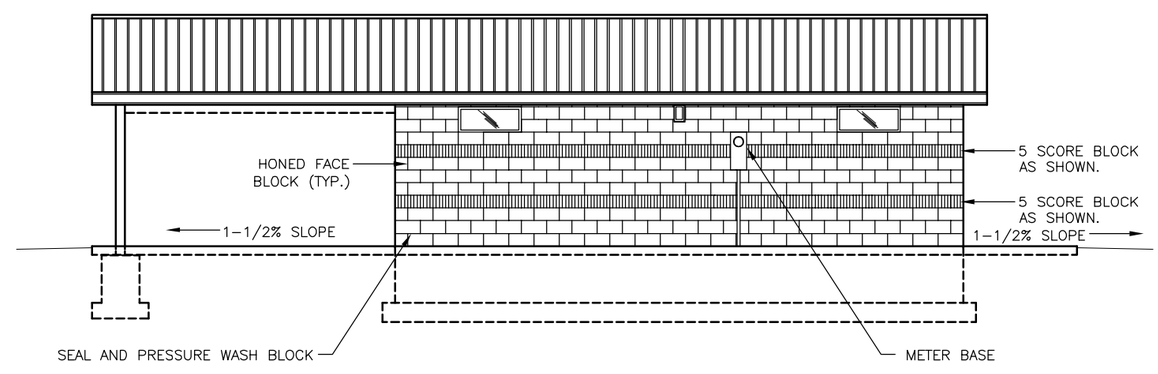

SOUTH ELEVATION

SCALE: 1/8" = 1'-0"

UTAH COUNTY ENGINEERS OFFICE
2855 South State Provo, Utah 84606

REVISIONS:

DATE: 06/1/06
SCALE: 1/8"=1'
DRAWN BY: GGT

THANKSGIVING POINT PARK
RESTROOM ELEVATIONS

SHEET NUMBER
9

H:\Glen\Drawings\Parks\Thanksgiving Point\dwg\Design\ Restroom.dwg 06/01/06 11:17 glent

You created this PDF from an application that is not licensed to print to novaPDF printer (http://www.novapdf.com)

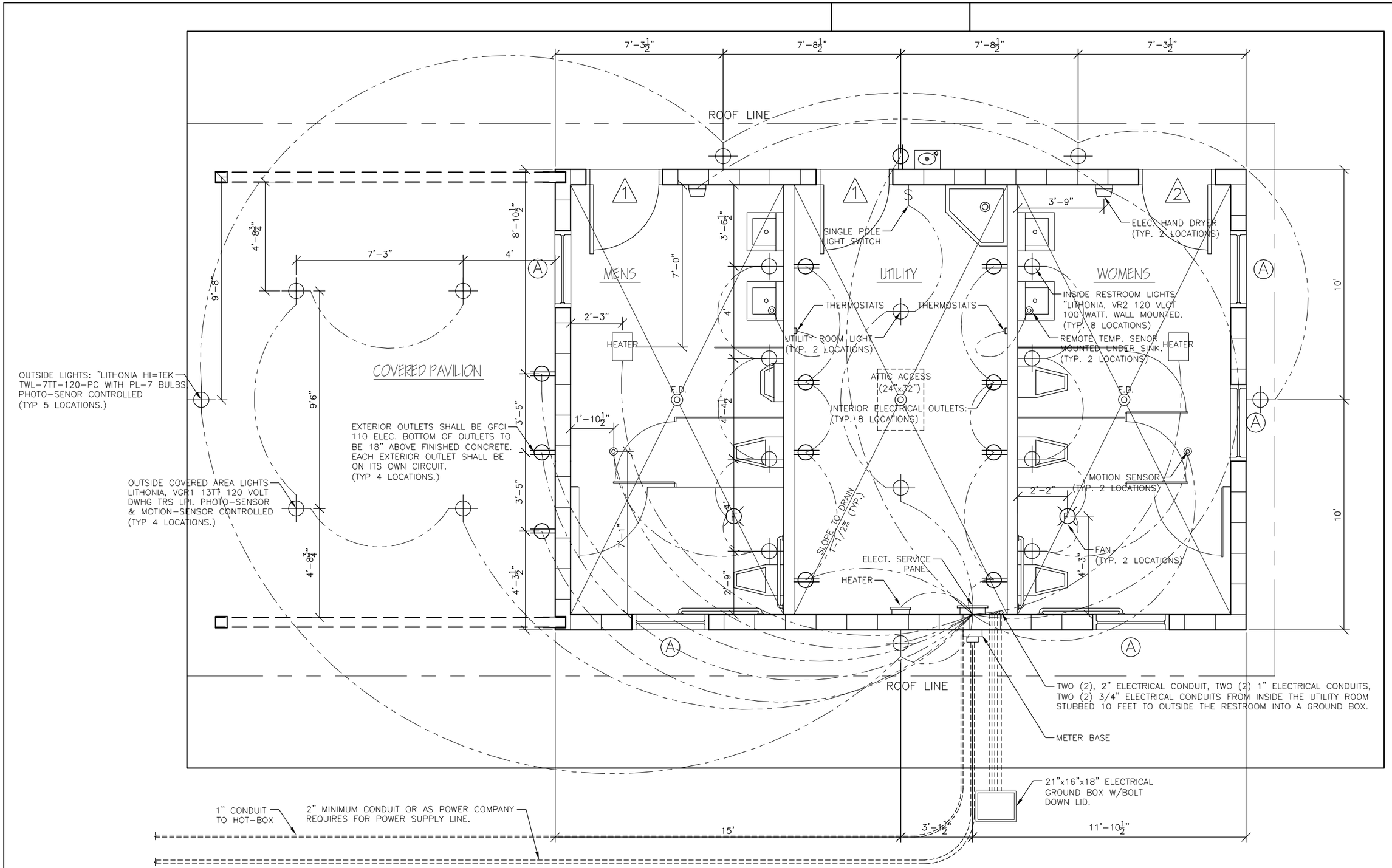

ELECTRICAL PLAN

SCALE: 1/4" = 1'-0"

UTAH COUNTY ENGINEERS OFFICE
2855 South State Provo, Utah 84606

REVISIONS:

DATE: 06/1/06
SCALE: 1/4"=1'
DRAWN BY: GGT

THANKSGIVING POINT PARK
RESTROOM
ELECTRICAL PLAN

SHEET NUMBER
4

H:\Glen\Drawings\Parks\Thanksgiving Point\dwg\Design\ Restroom.dwg 06/01/06 11:17 glent

You created this PDF from an application that is not licensed to print to novaPDF printer (http://www.novapdf.com)