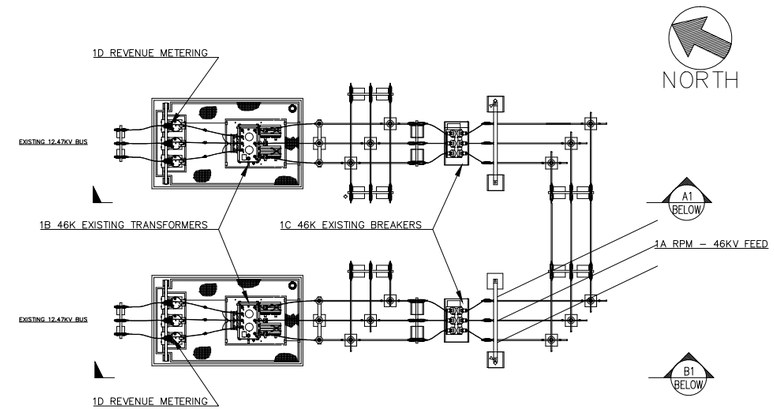

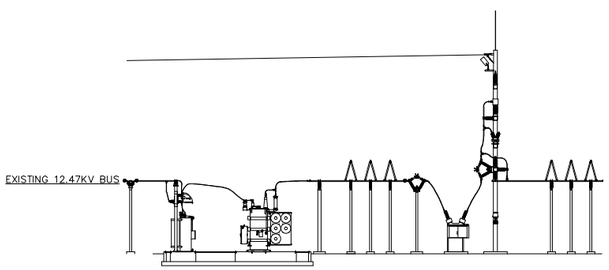

SECTION A1 (EAST BUS)

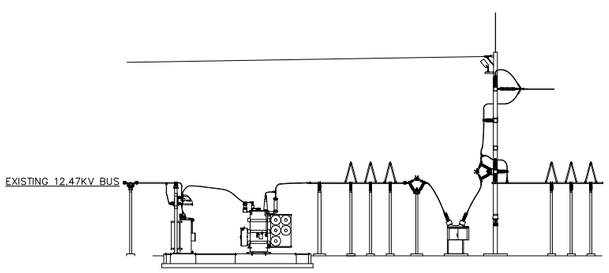

SECTION B1 (WEST BUS)

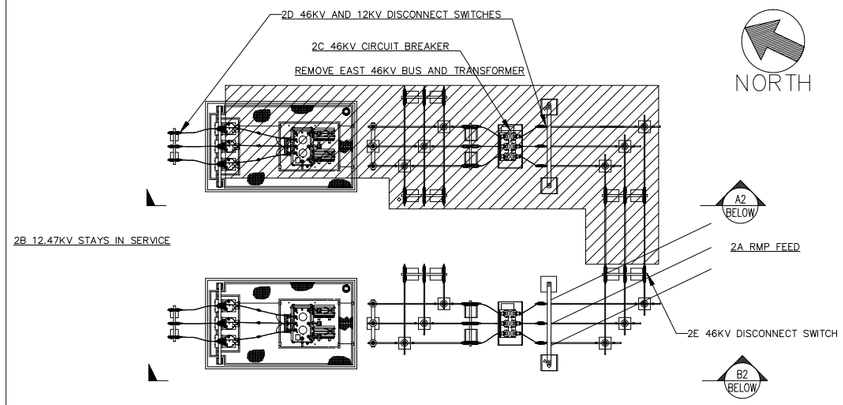

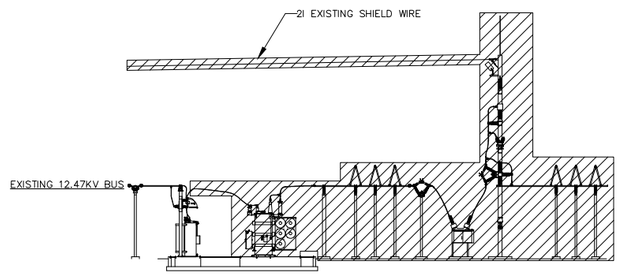

SECTION A2 (EAST BUS)

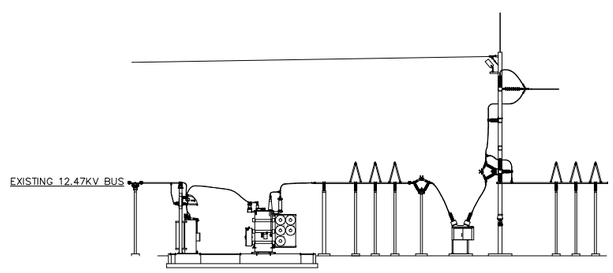

SECTION B2 (WEST BUS)

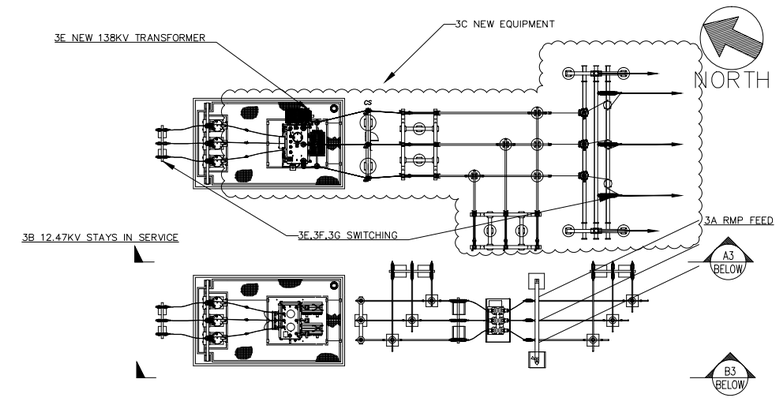

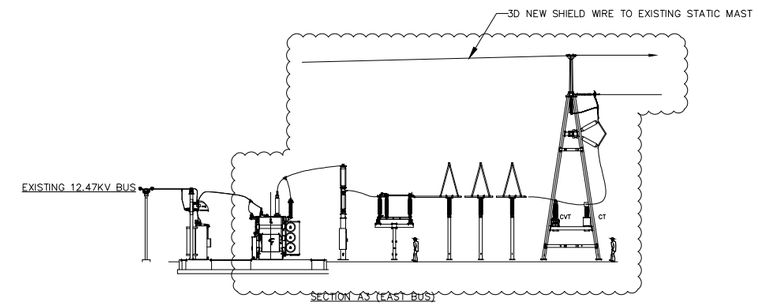

SECTION A3 (EAST BUS)

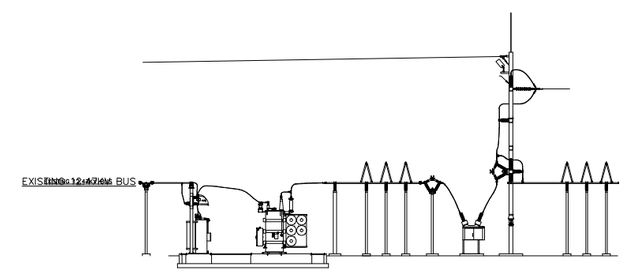

SECTION B3 (WEST BUS)

STAGE 1:
- A. EXISTING SUBSTATION IS FED FROM ROCKY MOUNTAIN POWER 46KV LINE THROUGH THE WEST 46KV H FRAME
- B. BOTH SUBSTATION TRANSFORMERS ARE IN SERVICE AND FEEDING LOAD AT 12.47KV
- C. 46–12.47KV TRANSFORMERS ARE PROTECTED BY 46KV CIRCUIT BREAKERS
- D. UAMPS REVINUE METERING IS ON 12.47KV SIDE OF TRANSFORMERS

STAGE 2:
- A. SUBSTATION REMAINS FED FROM ROCKY MOUNTAIN POWER 46KV LINE THROUGH THE WEST 46KV H FRAME
- B. LOW SIDE BUS TIE IS CLOSED PLACING TRANSFORMERS TEMPORARILY IN PARALLEL (BY CITY, TIE NOT SHOWN)
- C. EASTERN TRANSFORMER IS REMOVED FROM SERVICE BY OPENING CIRCUIT BREAKER
- D. 46KV AND 12.47KV DISCONNECT SWITCHES ARE OPENED (BY CITY)
- E. EASTERN 46KV BUS IS REMOVED FROM SERVICE BY OPENING WESTERN 46KV DISCONNECT SWITCH
- F. ALL EQUIPMENT IS LOCKED AND TAGGED OUT (BY CONTRACTOR AND CITY)
- G. ALL EQUIPMENT SHOWN IN HATCH IS REMOVED FROM SERVICE WITH ALL CONCRETE REMOVED TO BELOW SOIL LEVEL (BY CONTRACTOR) – TRANSFORMER/REGULATOR FOUNDATION WILL BE REUSED
- H. ANY GROUNDING CONDUCTORS BELOW GROUND DAMAGED DURING REMOVAL OF EQUIPMENT WILL BE REPAIRED IMMEDIATELY (BY CONTRACTOR), ANY UNDERGROUND CONDUITS OR OTHER BURIED OBSTRUCTIONS SHALL BE BROUGHT TO THE CITY'S ATTENTION IMMEDIATELY
- I. EXISTING SHIELD WIRE TO BE REMOVED BY CONTRACTOR (IF SWITCHING OF 12.47KV BUS IS NECESSARY OUTAGE MUST BE COORDINATED WITH CITY)

STAGE 3:
- A. SUBSTATION REMAINS FED FROM ROCKY MOUNTAIN POWER 46KV LINE THROUGH THE WEST 46KV H FRAME
- B. LOW SIDE BUS TIE REMAINS CLOSED PLACING BOTH 12.47KV BUSES IN PARALLEL
- C. NEW 138KV EQUIPMENT, FOUNDATIONS, STRUCTURAL STEEL AND ELECTRICAL CONNECTIONS (SHOWN IN CLOUD) ARE COMPLETED, TESTED AND COMMISSIONED (BY CONTRACTOR)
- D. NEW SHIELD WIRE TO BE INSTALLED BY CONTRACTOR (IF SWITCHING OF THE 12.47KV BUS IS NECESSARY OUTAGE MUST BE COORDINATE WITH CITY)
- E. NEW 138KV TRANSFORMER IS INSTALLED, DRESSED, TESTED AND COMMISSIONED (BY CONTRACTOR)
- F. LOCKS AND TAGS ON EXISTING 12.47KV EQUIPMENT ARE REMOVED (BY CITY AND CONTRACTOR)
- G. NEW 138KV TRANSFORMER IS ENERGIZED FROM RMP 138KV SOURCE AND ALLOWED TO SOAK (BY CITY AND CONTRACTOR)
- H. H. ANY GROUNDING CONDUCTORS BELOW GROUND DAMAGED DURING REMOVAL OF EQUIPMENT WILL BE REPAIRED IMMEDIATELY (BY CONTRACTOR), ANY UNDERGROUND CONDUITS OR OTHER BURIED OBSTRUCTIONS SHALL BE BROUGHT TO THE CITY'S ATTENTION IMMEDIATELY

PRINTED 06/24/2014 FOR
DATE

- ☐ PRELIMINARY
- ☐ DESIGN DEVELOPMENT
- ☒ BIDDING
- ☐ CONSTRUCTION
- ☐ APPROVAL
- ☐ AS BUILT
- ☐ REVISION

SALIENT Power Engineering LLC
720-502-6384 | www.salientpower.com

No.	DESCRIPTION	BY	DATE	APPD.
A	138KV CONVERSION IFB	CWM	06/24/2014	–

REVISIONS

BID DRAWING ONLY

TITLE
LEHI CITY
138kV – 12.47kV SUBSTATION #5
STATION STAGING

Drawn By: CWM	Date 06/24/2014	ENGR.	Date	DRAWING No. STAGE 1/2
Chk'd. By:	Date	APPD.	Date	REVISION A
Project No. ---	SCALE NO SCALE			

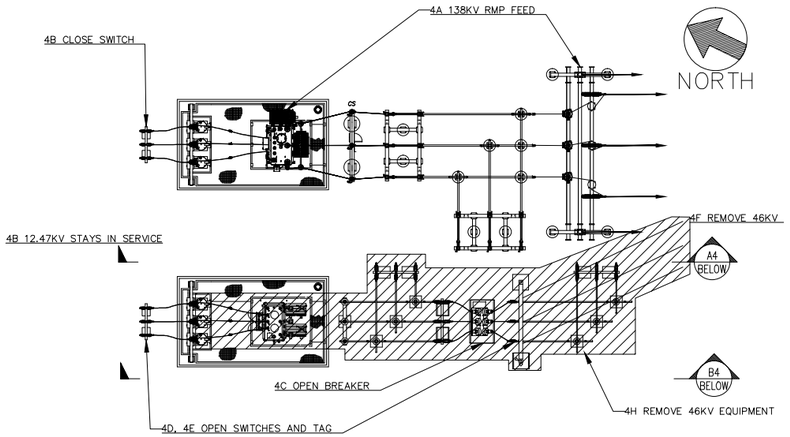

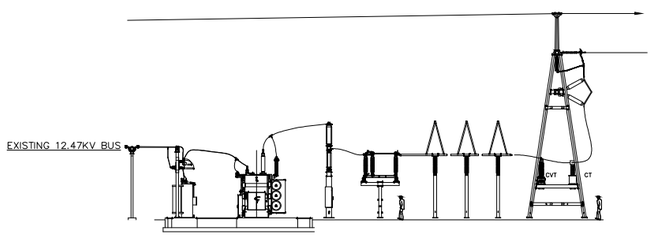

SECTION A4 (EAST BUS)

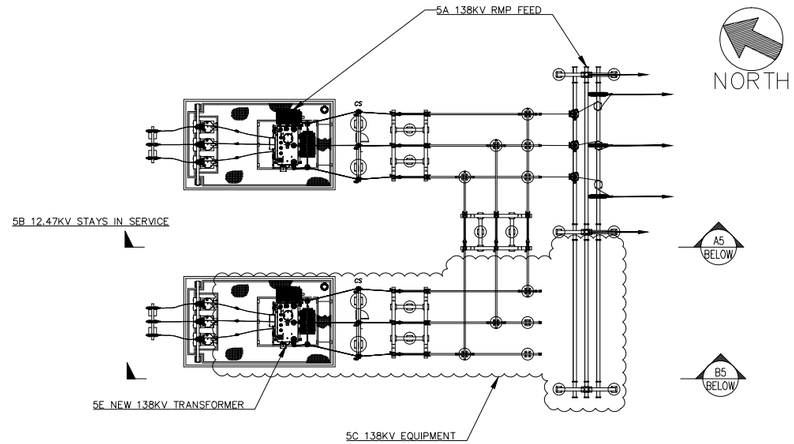

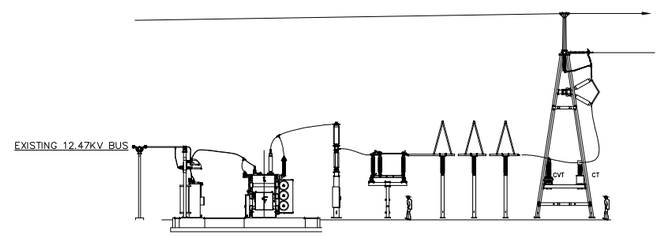

SECTION A5 (EAST BUS)

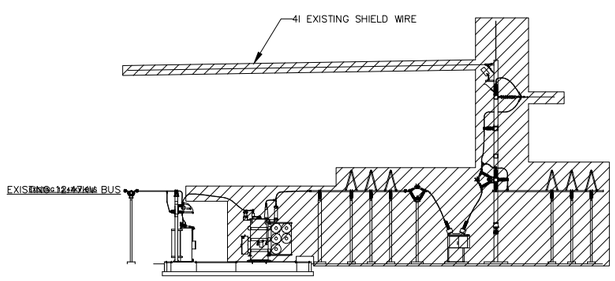

SECTION B4 (WEST BUS)

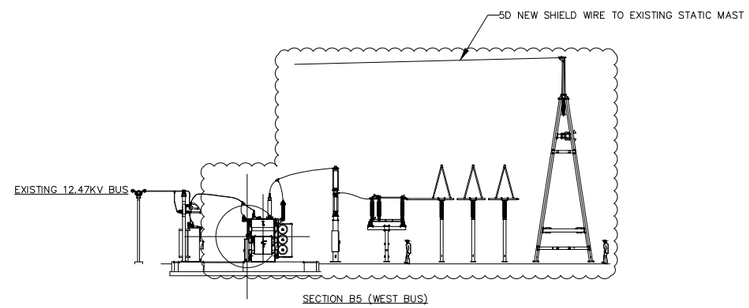

SECTION B5 (WEST BUS)

STAGE 4:

A. EAST TRANSFORMER IS FED FROM ROCKY MOUNTAIN POWER 138KV LINE THROUGH THE EAST 138KV H FRAME
B. LOW SIDE TRANSFORMER DISCONNECT IS CLOSED PLACING TRANSFORMERS TEMPORARILY IN PARALLEL (BY CITY)
C. WESTERN TRANSFORMER IS REMOVED FROM SERVICE BY OPENING CIRCUIT BREAKER
D. 46KV AND 12.47KV DISCONNECT SWITCHES ARE OPENED (BY CITY)
E. ALL EQUIPMENT IS LOCKED AND TAGGED OUT (BY CONTRACTOR AND CITY)
F. WESTERN 46KV BUS IS REMOVED FROM SERVICE BY REMOVING 46KV LINE JUMPERS
G. ALL EQUIPMENT SHOWN IN HATCH IS REMOVED FROM SERVICE WITH ALL CONCRETE REMOVED TO BELOW SOIL LEVEL (BY CONTRACTOR)
H. ANY GROUNDING CONDUCTORS BELOW GROUND DAMAGED DURING REMOVAL OF EQUIPMENT WILL BE REPAIRED IMMEDIATELY (BY CONTRACTOR), ANY UNDERGROUND CONDUITS OR OTHER BURIED OBSTRUCTIONS SHALL BE BROUGHT TO THE CITY'S ATTENTION IMMEDIATELY
I. EXISTING SHIELD WIRE TO BE REMOVED BY CONTRACTOR (IF SWITCHING OF 12.47KV BUS IS NECESSARY OUTAGE MUST BE COORDINATED WITH CITY)

STAGE 5:

A. SUBSTATION REMAINS FED FROM ROCKY MOUNTAIN POWER 138KV LINE THROUGH THE EAST TRANSFORMER
B. LOW SIDE BUS TIE REMAINS CLOSED PLACING BOTH 12.47KV BUSES IN PARALLEL
C. NEW 138KV EQUIPMENT, FOUNDATIONS, STRUCTURAL STEEL AND ELECTRICAL CONNECTIONS (SHOWN IN CLOUD) ARE COMPLETED, TESTED AND COMMISSIONED (BY CONTRACTOR)
D. NEW SHIELD WIRE TO BE INSTALLED BY CONTRACTOR (IF SWITCHING OF THE 12.47KV BUS IS NECESSARY OUTAGE MUST BE COORDINATE WITH CITY)
E. NEW 138KV TRANSFORMER IS INSTALLED, DRESSED, TESTED AND COMMISSIONED (BY CONTRACTOR)
F. LOCKS AND TAGS ON EXISTING 12.47KV EQUIPMENT ARE REMOVED (BY CITY AND CONTRACTOR)
G. NEW 138KV TRANSFORMER IS ENERGIZED FROM EAST BUS AND ALLOWED TO SOAK (BY CITY AND CONTRACTOR)
H. WEST TRANSFORMER IS PLACED INTO SERVICE BY CLOSING 138KV AND 12.47KV SWITCHES AND 138KV CIRCUIT SWITCHER (BY CITY)
I. FINAL PUNCH LIST AND SITE WALK (BY CITY)
J. COMPLETE ALL WORK AND DEMOBILIZE (BY CONTRACTOR

GENERAL NOTES:

A. THESE DRAWINGS ARE FOR CLARIFICATION PURPOSES ONLY AND ARE NOT TO BE USED FOR CONSTRUCTION
B. IN THE EVENT OF DISCREPANCY BETWEEN THE STAGING AND OTHER DRAWING OR THE SPECIFICATIONS PROVIDED, THE OTHER DRAWINGS AND SPECIFICATION SHALL BE CONSIDERED ACCURATE
C. PLEASE SEE SPECIFICATION AND BID DRAWINGS FOR COMPLETE SCOPE AND SCHEDULE

PRINTED 06/24/2014 FOR
DATE

- ☐ PRELIMINARY
- ☐ DESIGN DEVELOPMENT
- ☒ BIDDING
- ☐ CONSTRUCTION
- ☐ APPROVAL
- ☐ AS BUILT
- ☐ REVISION

SALIENT Power Engineering LLC
720-502-6384 | www.salientpower.com

No.	DESCRIPTION	BY	DATE	APPD.
A	138KV CONVERSION IFB	CWM	06/24/2014	–

REVISIONS

BID DRAWING ONLY

TITLE
LEHI CITY
138kV – 12.47kV SUBSTATION #5
STATION STAGING

Drawn By: CWM	Date 06/24/2014	ENGR.	Date	DRAWING No.	REVISION
Chk'd. By:	Date	APPD.	Date	STAGE 2/2	A
Project No. ---	SCALE NO SCALE				

CONTRACTOR FURNISHED–MAJOR EQUIPMENT, BUS WORK AND CONNECTIONS MATERIAL LIST

ITEM	QTY	DESCRIPTION	MFR	CATALOG #	ITEM	QTY	DESCRIPTION	MFR	CATALOG #	ITEM	QTY	DESCRIPTION	MFR	CATALOG #
600	AS REQ.	795 26/7 ACSR "DRAKE" CONDUCTOR												
601	3	COMPRESSION DEAD–END, 795 26/7 ACSR "DRAKE"	HUBBELL	A021245										
602	3	138kV STRAIN INSULATOR	QUADRI*SIL	S030047S2010										
603	300	ALUMINUM BUS, 4" IPS, (4.5" O.D.), 6063–T6												
604	12	ALUMINUM WELDMENT, PIPE TO ANGLE TEE, 4" TO 3", 15 DEGREES	TRAVIS PATTERN	18–283–15										
605	120	ALUMINUM BUS, 3" IPS, (3.5" O.D.), 6063–T6												
606	6	ALUMINUM WELDMENT, PIPE TO ANGLE VEE, 4" TO 3", 15 DEGREES	TRAVIS PATTERN	18–374–15										
607	6	ALUMINUM WELDMENT, INTERNAL END PLUG	TRAVIS PATTERN	18–1295										
608	3	HARDWARE FITTING, DUCTILE IRON, SOCKET Y–CLEVIS	HUBBELL	SYC–30										
609	10	HOOK ON BUS SUPPORT, 4" IPS	TRAVIS PATTERN	19–354										
610	10	138kV STATION CLASS INSULATOR	LAPP	TR–288										
611	3	98kV MCOV SURGE ARRESTER												
612	81	ALUMINUM, COMPRESSION, CABLE TO FLAT, STRAIGHT	TRAVIS PATTERN	16–161C										
613	18	ALUMINUM COMPRESSION, TEE, CABLE TO FLAT	TRAVIS PATTERN	16–161C–T										
616	10	ALUMINUM WELDMENT, PIPE TO PIPE COUPLER, 4: IPS	TRAVIS PATTERN	18–584										

GENERAL NOTES

THE LISTS OF MATERIAL ARE FOR IDENTIFICATION OF ITEMS ONLY. THE OWNER SHALL PURCHASE ALL MATERIAL INDICATED ON THE MATERIAL LIST AND NECESSARY FOR PROJECT CONSTRUCTION. THE CONTRACTOR IS RESPONSIBLE FOR PROVIDING CONCRETE, GRAVEL, CLAY, ROADWAY SURFACING, MATERIALS AND EQUIPMENT NAMEPLATES.

OWNER FURNISHED–MAJOR EQUIPMENT, BUS WORK AND CONNECTIONS MATERIAL LIST

ITEM	QTY	DESCRIPTION	MFR	CATALOG #	ITEM	QTY	DESCRIPTION	MFR	CATALOG #	ITEM	QTY	DESCRIPTION	MFR	CATALOG #
614	1	138/12.47kV POWER TRANSFORMER												
615	3	138kV VERTICAL BREAK GROUP OPERATED AIR BREAK SWITCH												
617	3	138kV CURRENT TRANSFORMER												
618	3	138kV CCVT												
620	1	138kV VERTICAL BREAK SLANT GROUP OPERATED AIR BREAK SWITCH												
621	2	138kV CIRCUIT SWITCHER WITH ANCHOR BOLTS	S & C											
622	1	2 BAY 138KV DEAD–END STRUCTURE												
623	10	1 PH LOW BUS SUPPORT												
624	2	138kV LOW SWITCH STAND												
625	1	138kV HIGH SWITCH STAND												
626	12	ANCHOR BOLT CAGE TYPE I												
627	10	ANCHOR BOLT CAGE TYPE II												

PRINTED 06/25/14 FOR
DATE

- ☐ PRELIMINARY
- ☐ DESIGN DEVELOPMENT
- ☒ BIDDING
- ☐ CONSTRUCTION
- ☐ APPROVAL
- ☐ AS BUILT
- ☐ REVISION

No.	DESCRIPTION	BY	DATE	APPD.
A	138KV CONVERSION IFB	JLF	06/25/14	CWM

REVISIONS

BID DRAWING ONLY

SALIENT Power Engineering LLC
720-502-6384 | www.salientpower.com

TITLE
LEHI CITY
138kV – 12.47kV SUBSTATION #5
138kV MATERIAL LIST

Drawn By: JLF	Date 06/24/14	ENGR. JLF	Date	DRAWING No.	REVISION
Chk'd. By:	Date	APPD.	Date	E004	A
Project No. –	SCALE NO SCALE				

LH5-E003.dwg rgrover 11/03/99 02:44 PR ENGR: ---

SYMBOL LEGEND

REGULATOR BANK	
PROTECTIVE RELAY	
RECLOSER WITH BYPASS FUSES AND DISCONNECTS	
CIRCUIT BREAKER WITH C.T.	
BUSHING CURRENT TRANSFORMER	
46KV AIR BREAK SWITCH	
POWER TRANSFORMER	
BILLING METER	
VOLT METER	
AMMETER	
FUTURE PLANNING CONSIDERED FOR SUBSTATION	
CONTROL CIRCUIT	
STATION SERVICE TRANSFORMER	
BUSHING CURRENT TRANSFORMER, POLARITY INDICATED	
CIRCUIT RECLOSER, W/ELECTRONIC CONTROL AND METERING	
CABLE TERMINATOR	
ELECTRONIC CONTROL FOR RECLOSER PHASE AND GROUND OVERCURRENT AND RECLOSING	
POWER TRANSFORMER	
DISCONNECT SWITCH, HOOK STICK OPERATED	
VT CIRCUIT INDICATOR LAMP	
SURGE ARRESTOR	
FUSED DISCONNECT SWITCH	
15KV GROUP OPERATED AIRBREAK SWITCH	
VOLTAGE REGULATOR	
PROTECTIVE OR INSTRUMENTATION DEVICE	
46010	IDENTIFICATION FOR NAMEPLATES. REFER TO NAMEPLATE SCHEDULE (SHOWN ON DWG)
MRBCT	MULTI-RATIO BUSHING CURRENT TRANSFORMER
50	INSTANTANEOUS OVERCURRENT
51	TIME OVERCURRENT
79	RECLOSING
86	LOCKOUT
87	DIFFERENTIAL
67	DIRECTIONAL OVERCURRENT

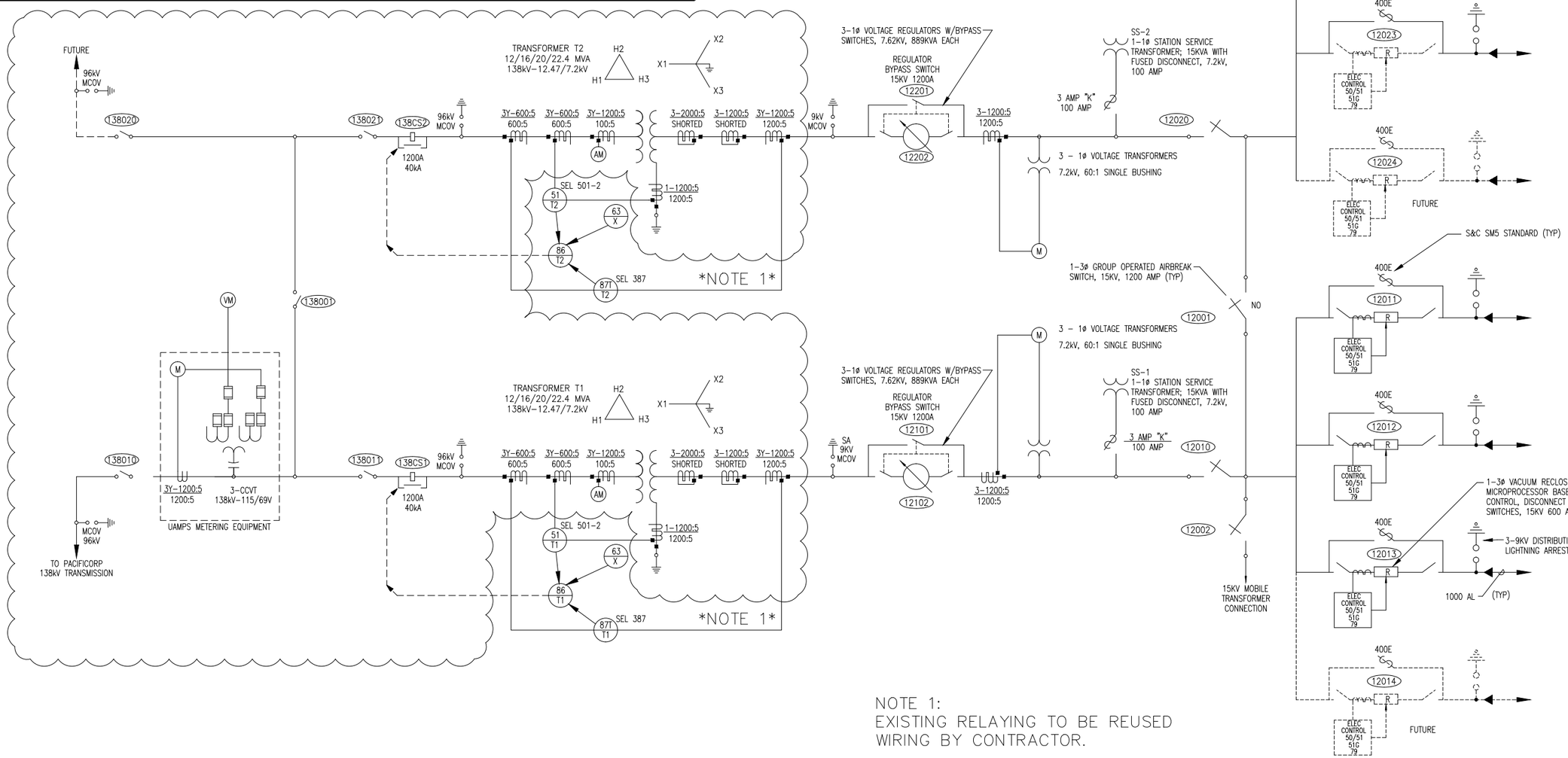

NOTE 1:
EXISTING RELAYING TO BE REUSED
WIRING BY CONTRACTOR.

PRINTED 06/25/14 FOR
DATE

- ☐ PRELIMINARY
- ☐ DESIGN DEVELOPMENT
- ☒ BIDDING
- ☐ CONSTRUCTION
- ☐ APPROVAL
- ☐ AS BUILT
- ☐ REVISION

No.	DESCRIPTION	BY	DATE	APPD.
3	138KV CONVERSION IFB	JLF	06/25/14	CWM
2	PRELIMINARY 138KV REVISION	EAW	12/02/13	CWM
1	AS BUILT	JSI	07/01/00	RLH

REVISIONS

BID DRAWING ONLY

SALIENT Power Engineering LLC
720-502-6384 | www.salientpower.com

TITLE
LEHI CITY
138kV – 12.47kV SUBSTATION #5
ONE LINE DIAGRAM

Drawn By: JSI	Date 09/20/99	ENGR. CC	Date 02/17/2000	DRAWING No.	REVISION
Chk'd. By: MRV	Date 12/19/99	APPD. CBM	Date 02/17/2000	E100	3
Project No. 13-043	SCALE NO SCALE				

LH5-E100.dwg jsi 02/17/00 08:33 PR ENGR: ---

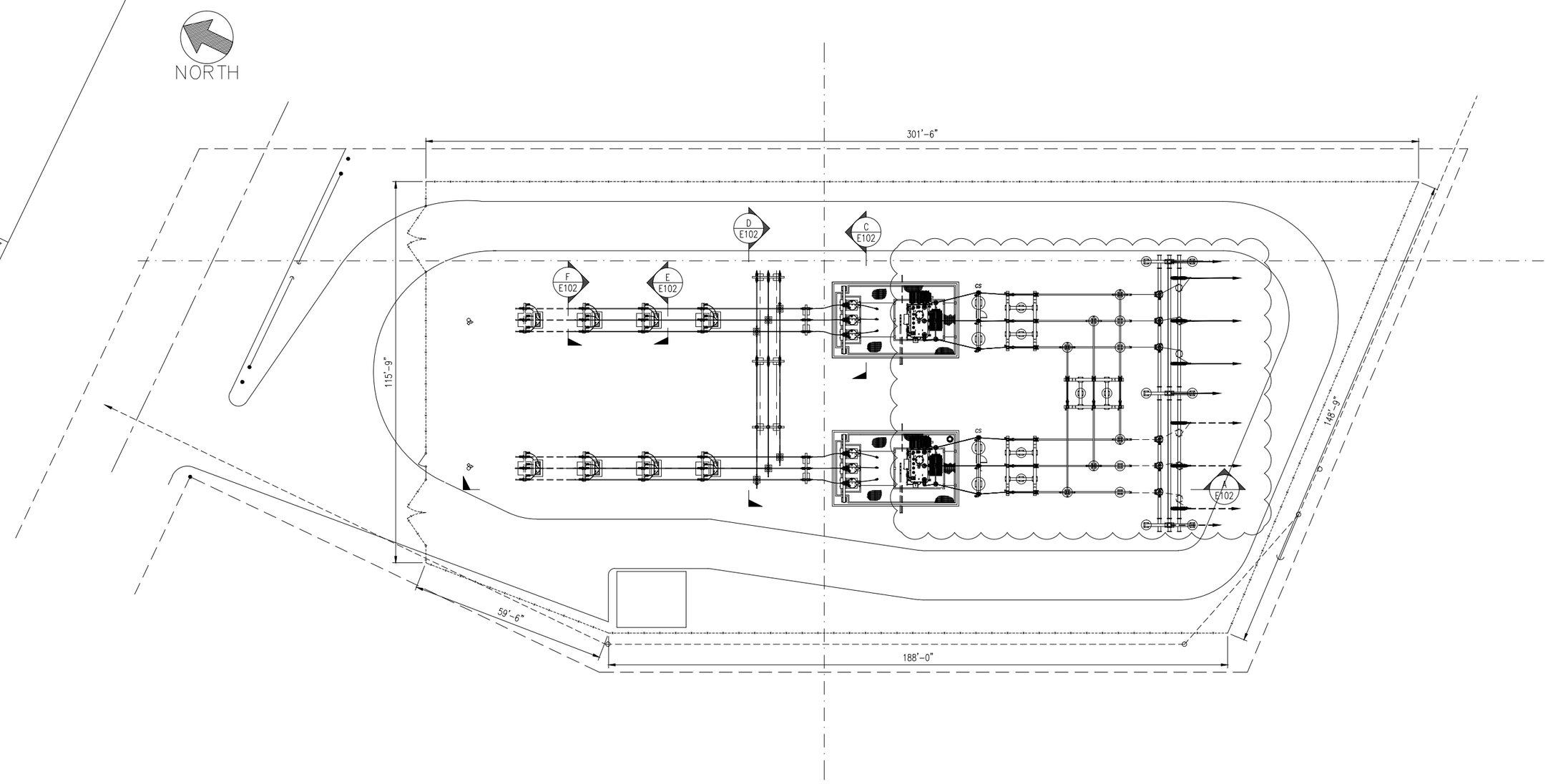

PRINTED 06/25/14 FOR
DATE

- ☐ PRELIMINARY
- ☐ DESIGN DEVELOPMENT
- ☒ BIDDING
- ☐ CONSTRUCTION
- ☐ APPROVAL
- ☐ AS BUILT
- ☐ REVISION

No.	DESCRIPTION	BY	DATE	APPD.
5	138kV CONVERSION IFB	JLF	06/25/14	CWM
4B	PRELIMINARY 138KV REVISION	JLF	12/16/13	CWM
3	AS BUILT	JSI	07/01/00	RLH
2	REVISED CONTROL BUILDING DIMENSION	JSI	10/11/99	–
1	CHANGE ROADWAY	CVM	10/04/99	–

REVISIONS

BID DRAWING ONLY

SALIENT Power Engineering LLC
720-502-6384 | www.salientpower.com

TITLE
LEHI CITY
138kV – 12.47kV SUBSTATION #5
STATION SITE PLAN

Drawn By: JSI	Date 09/20/99	ENGR.	Date	DRAWING No.	REVISION
Chk'd. By:	Date	APPD.	Date	E101	5
Project No. 13-043	SCALE NO SCALE				

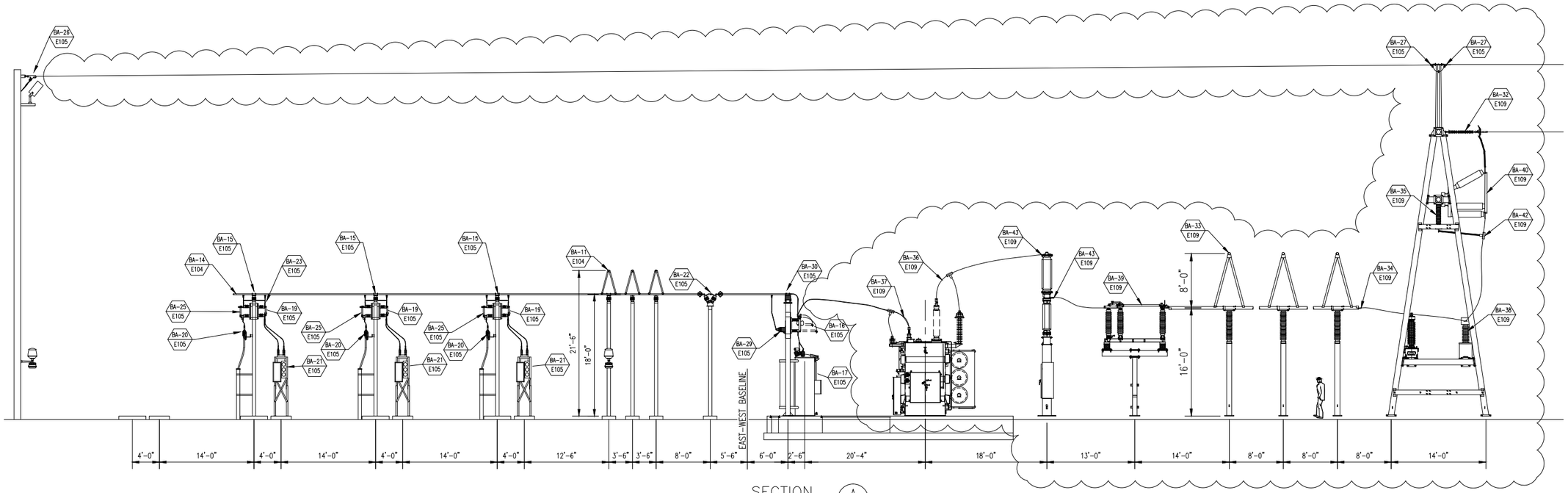

SECTION A / E101
SCALE: 1"=8'-0"

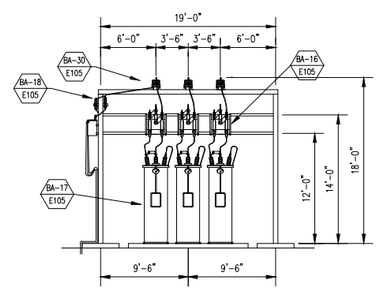

SECTION C / E101
SCALE: 1"=8'-0"

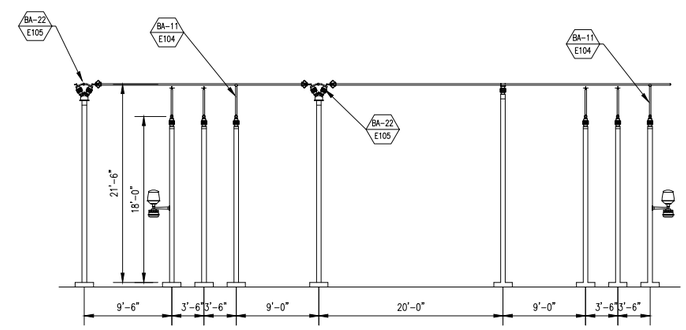

SECTION D / E101
SCALE: 1"=8'-0"

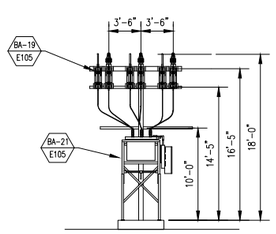

SECTION E / E101
SCALE: 1"=8'-0"

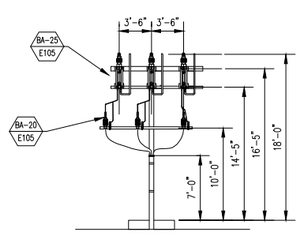

SECTION F / E101
SCALE: 1"=8'-0"

LEGEND

EX – EXPANSION BUS FITTING
S – SLIP BUS FITTING (NON-WELDED)
F – FIXED BUS FITTING (WELDED)

C / M01 — ELECTRICAL ASSEMBLY – SECTION DETAIL REFER TO REFERENCED DRAWING NUMBER
BA-1 / M02 — DETAIL NUMBER REFER TO REFERENCED DRAWING NUMBER
B1 — STRUCTURE DESIGNATION
21 — CONTRACTOR FURNISHED EQUIPMENT OR MATERIAL ITEM NUMBER
B1 — OWNER FURNISHED EQUIPMENT OR MATERIAL ITEM NUMBER
69101 — IDENTIFICATION OF NAMEPLATES. REFER TO NAMEPLATE SCHEDULE (SHOWN ON DRAWING NO. E104 FOR DETAIL)

GENERAL NOTES

1. REFER TO CONSTRUCTION SPECIFICATIONS FOR MATERIAL, EQUIPMENT, ERECTION AND INSTALLATION REQUIREMENTS AND SPECIFIC DETAILS, UNLESS OTHERWISE NOTED.
2. BUS AND EQUIPMENT SHOWN DASHED ARE FUTURE.
3. ALUMINUM TUBING SHALL BE INSTALLED AS FOLLOWS:
   3", 6063 – T6 SCHEDULE 40 – 69KV BUS AS INDICATED.
   2 1/2", 6063 – T6 SCHEDULE 40 – 12KV BUS AS INDICATED.
4. ALL HORIZONTAL SPANS OF ALUMINUM RIGID BUS GREATER THAN 5 FEET SHALL HAVE ACSR DAMPING CONDUCTOR INSTALLED INSIDE AS FOLLOWS:
   3" IPS – #4/0 AWG ACSR, 2 1/2" #4/0 AWG ACSR.
5. LIST OF MATERIALS ON DRAWINGS IS FOR IDENTIFICATION OF ITEMS ONLY. CONTRACTOR SHALL BE RESPONSIBLE TO MAKE OWN TAKE-OFFS FOR ALL QUANTITIES.
6. BUS FITTINGS INDICATED AT ONE PHASE ARE TYPICAL FOR EACH PHASE.
7. ALL SIGNS SHALL BE PROPERLY LOCATED PER THE CONSTRUCTION SPECIFICATIONS.
8. MINIMUM CLEARENCE TO LIVE PARTS SHALL BE IN ACCORDANCE WITH N.E.S.C. OR NEMA OR 10'-0", WHICHEVER IS GREATER.
9. NAMEPLATES SHALL BE MOUNTED ON THE DESCRIBED EQUIPMENT IF POSSIBLE OR OTHERWISE NEXT TO THE EQUIPMENT ON ITS SUPPORT STRUCTURE.
10. NAMEPLATES SHALL BE MADE OF PHENOLIC RIGID ENGRAVING STOCK AND SHALL BE MOUNTED WITH SCREWS OR RIVETS.
11. NAMEPLATES SHALL HAVE WHITE LETTERING 1/2" HIGH ON A BLACK FIELD.

SCALE: 1"=8'-0"

PRINTED 06/25/14 FOR
DATE
☐ PRELIMINARY
☐ DESIGN DEVELOPMENT
☒ BIDDING
☐ CONSTRUCTION
☐ APPROVAL
☐ AS BUILT
☐ REVISION

No.	DESCRIPTION	BY	DATE	APPD.
5	138KV CONVERSION IFB	JLF	06/25/14	CWM
4	PRELIMINARY 138KV REVISION	JLF	12/16/13	CWM
3	AS BUILT	JSI	07/01/00	RLH
2	CHANGED TO BA-16	CVM	11/3/99	–
1	ADDED FLOOD LIGHT	CVM	10/7/99	–

REVISIONS

BID DRAWING ONLY

SALIENT Power Engineering LLC
720-502-6384 | www.salientpower.com

TITLE: LEHI CITY
138kV – 12.47kV SUBSTATION #5
STATION SECTION VIEWS

Drawn By: JSI	Date 09/20/99	ENGR.	Date	DRAWING No.	REVISION
Chk'd. By:	Date	APPD.	Date	E102	5
Project No. 13-043	SCALE AS SHOWN				

LH5-E102.dwg JSchow 11/05/01 14:41 PR ENGR: ---

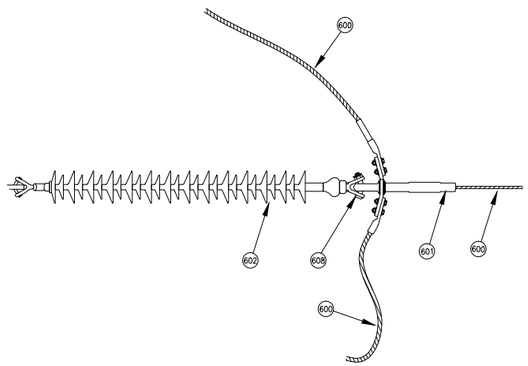

BA-32 (3 @ 138kV REQUIRED)
1ø TRANSMISSION TERMINATION
CONNECTION DETAIL

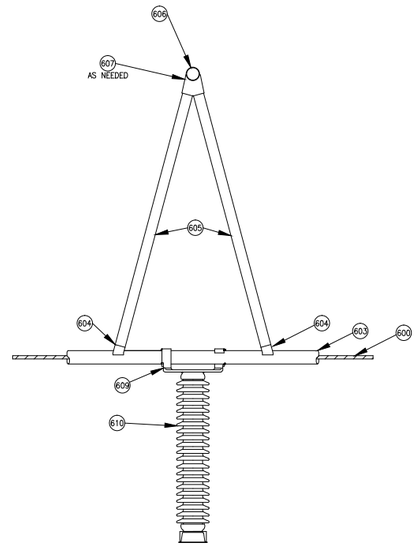

BA-33 (6 @ 138kV REQUIRED)
138 kV 1ø BUS SUPPORT
CONNECTION DETAIL

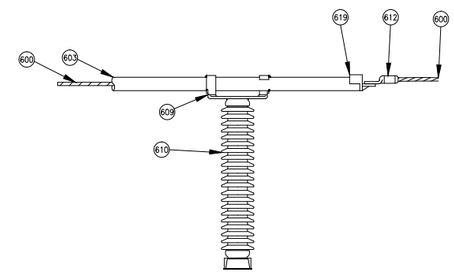

BA-34 (4 @ 138kV REQUIRED)
138 kV 1ø BUS SUPPORT
CONNECTION DETAIL

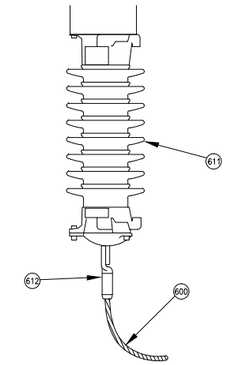

BA-35 (3 @ 138kV REQUIRED)
138kV 1ø LIGHTING ARRESTOR
CONNECTION DETAIL

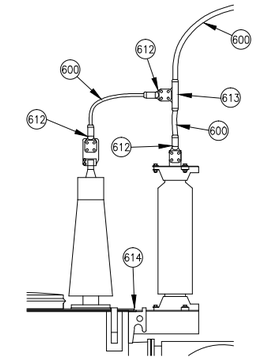

BA-36 (3 @ 138kV REQUIRED)
138kV BUSHING 3ø TRANSFORMER
CONNECTION DETAIL

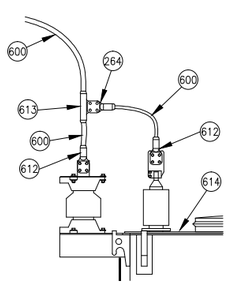

BA-37 (3 @ 12.47kV REQUIRED)
12.47kV BUSHING 3ø TRANSFORMER
CONNECTION DETAIL

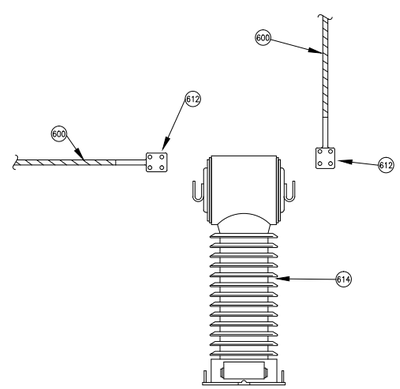

BA-38 (3 @ 138kV REQUIRED)
138kV CURRENT TRANSFORMER CONNECTION

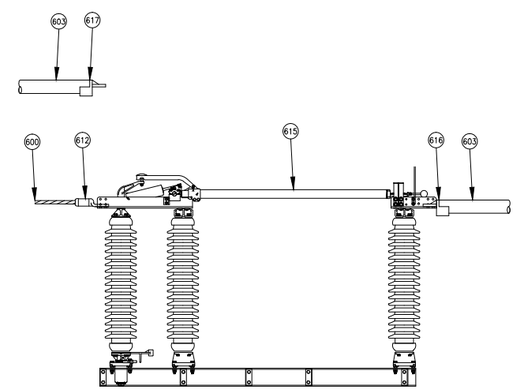

BA-39 (9 @ 138kV REQUIRED)
138kV 1ø VERTICAL BREAK
SWITCH CONNECTION DETAIL

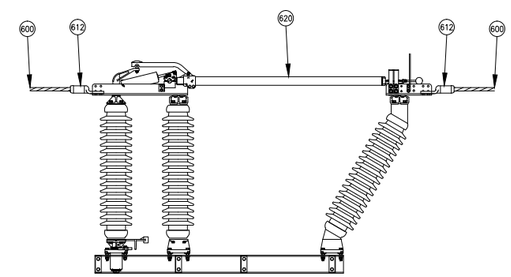

BA-40 (3 @ 138kV REQUIRED)
138kV 1ø VERTICAL BREAK
SWITCH CONNECTION DETAIL

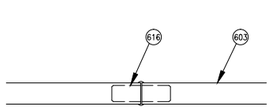

BA-41 (AS REQUIRED)
2.5" OR 3" WELD EXPANSION BUS

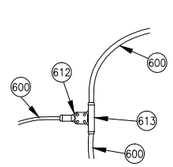

BA-42 (3 @ 138kV REQUIRED)
138kV 1ø TEE TAP
CONNECTION DETAIL

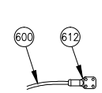

BA-43 (12 @ 138kV REQUIRED)
138kV 1ø JUMPER
CONNECTION DETAIL

PRINTED 07/01/00 FOR
DATE

- ☐ PRELIMINARY
- ☐ DESIGN DEVELOPMENT
- ☒ BIDDING
- ☐ CONSTRUCTION
- ☐ APPROVAL
- ☐ AS BUILT
- ☐ REVISION

SALIENT Power Engineering LLC
720-502-6384 | www.salientpower.com

No.	DESCRIPTION	BY	DATE	APPD.
A	138kV CONVERSION IFB	JLF	06/25/14	CWM

REVISIONS

BID DRAWING ONLY

TITLE
LEHI CITY
138kV – 12.47kV SUBSTATION #5
BUS ASSEMBLY DETAILS

Drawn By: JSI	Date 09/20/99	ENGR.	Date	DRAWING No.	REVISION
Chk'd. By:	Date	APPD.	Date	E109	A
Project No. 13-043	SCALE NO SCALE				

LH5-E104.dwg jsi 10/13/99 14:12 PR ENGR: ----

LEGEND

CABLE TO CABLE CONNECTION	
CABLE TO GROUND ROD CONNECTION	
GROUND LEAD UP TO FENCE	
#4/0 AWG GROUND LEAD UP TO EQUIPMENT STRUCTURE	
#4/0 AWG STRANDED BARE COPPER	
#2/0 AWG STRANDED BARE COPPER	
SUBSTATION FENCE	
OPERATOR'S GROUNDED SWITCHING PLATFORM	
IDENTIFICATION OF GROUNDING DETAILS	G21
GROUND ROD (G22)	⊗
4/0 VIA 1" PVC GROUND CONDUIT	▫
4/0 X 4/0 COMPRESSION (G21)	■
4/0 X 2/0 COMPRESSION (G23)	●
2/0 X 2/0 COMPRESSION (G20)	○

NOTES

1. ALL COPPER BELOW GRADE #2/0 & #4/0 BARE COPPER.
2. ALL COPPER ABOVE GRADE #4/0.
3. ALL INTERSECTIONS TO BE COMPRESSION CONNECTION.
4. ALL #4/0 COPPER COMING ABOVE GRADE MUST BE LONG ENOUGH TO TIE TO EACH SPECIFIC PIECE OF EQUIPMENT AS PER SPEC.
5. EACH STRUCTURE TO BE GROUNDED ON TWO SIDES.
6. REFER TO GROUNDING DETAIL DRAWINGS E201 & E202 FOR ASSEMBLY DETAILS. ITEMS G1 THRU G24.
7. ALL STRUCTURE AND EQUIPMENT BASE GROUND CONNECTIONS SHALL BE #4/0 STRANDED COPPER. ALL CONNECTIONS ON STEEL STRUCTURES AND EQUIPMENT ABOVE THE BASE GROUND SHALL BE #4/0 STRANDED COPPER.
8. STATION GROUND MAT CONSISTS OF A #4/0 STRANDED COPPER BURIED GRID SYSTEM WITHIN THE SUBSTATION YARD AND A #2/0 STRANDED COPPER PERIMETER AND FENCE GROUND. THE LAYOUT SHOWN ON THIS DRAWING MAY NOT BE ADJUSTED BY THE CONTRACTOR WITHOUT APPROVAL OF THE OWNER. ANY AUTHORIZED CHANGES MUST BE SHOWN ON DRAWINGS AND BE SUBMITTED TO THE OWNER PER THE SPECIFICATIONS.
9. GROUND GRID CONDUCTORS SHALL BE BURIED A MINIMUM OF 1'-6" BELOW FINAL EARTH GRADE (EXCLUDING CRUSHED ROCK COVERING).
10. GROUND RODS SHOULD BE INSTALLED WITH TOPS 1'-0" MINIMUM BELOW GRADE AND BONDED TO THE GROUND GRID CONDUCTORS.
11. REFER TO SPECIFICATIONS FOR INSTALLATION AND MATERIAL REQUIREMENTS.
12. ALL BENDS SHOWN SHALL BE 4" MINUMUM RADIUS.
13. PERIMETER GROUND GRID SHALL BE INSTALLED 3'-0" OUTSIDE & AROUND THE ENTIRE SUBSTATION FENCE INCLUDING GATES IN ANY POSITION.
14. CONNECT 12.5kV SWITCH PLATFORMS TO SWITCH OPERATOR HANDLE.
15. 46kV SWITCH PLATFORMS ARE ISOLATED FROM THE GROUND GRID.

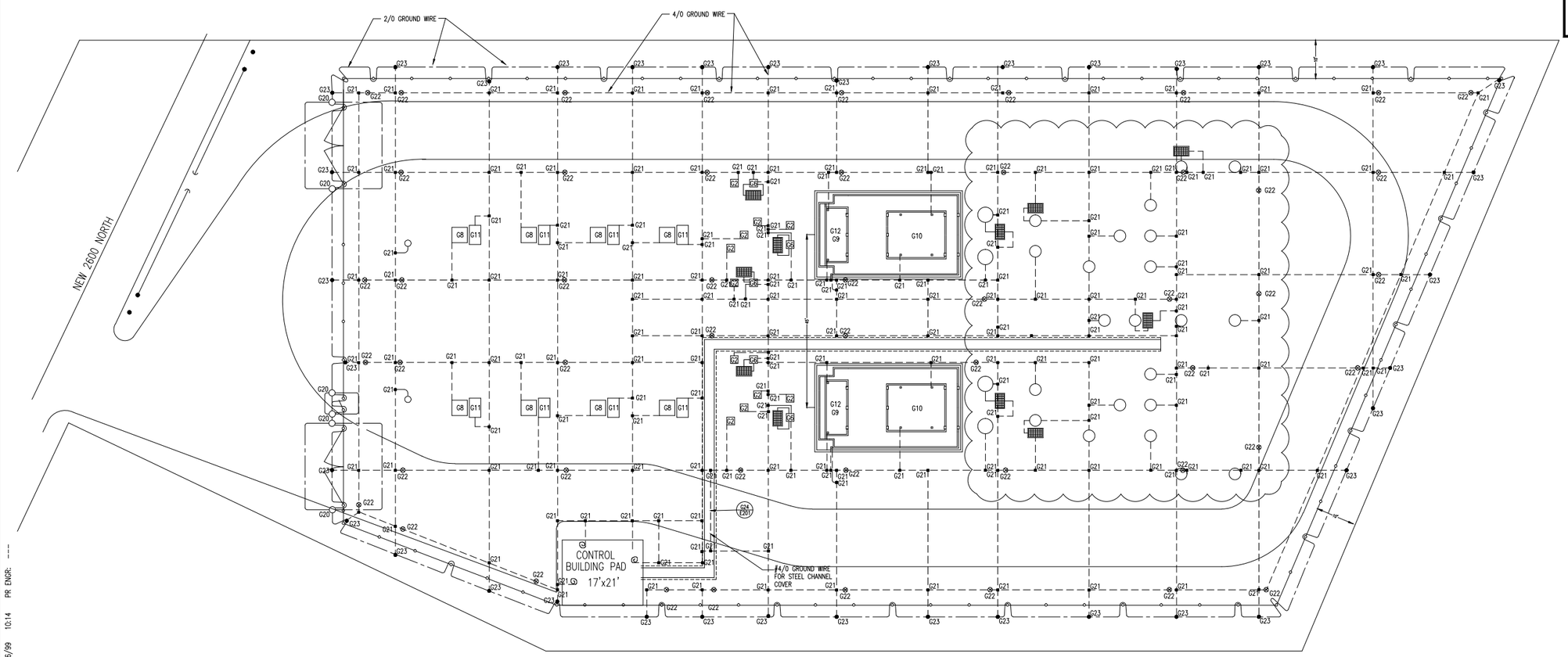

PRINTED 06/25/2014 FOR
DATE

- ☐ PRELIMINARY
- ☐ DESIGN DEVELOPMENT
- ☒ BIDDING
- ☐ CONSTRUCTION
- ☐ APPROVAL
- ☐ AS BUILT
- ☐ REVISION

No.	DESCRIPTION	BY	DATE	APPD.
4	138KV CONVERSION IFB	JLF	06/25/2014	CWM
3	AS BUILT	JSI	07/01/00	RLH
2	CHANGED CONTROL BLDG AND TRENCH	CVM	10/07/99	
1	CHANGE ROAD	CVM	10/06/99	–

REVISIONS

BID DRAWING ONLY

SALIENT Power Engineering LLC
720-502-6384 | www.salientpower.com

TITLE
LEHI CITY
138kV – 12.47kV SUBSTATION #5
GENERAL GROUNDING PLAN

Drawn By: JSI	Date 09/20/99	ENGR.	Date	DRAWING No.	REVISION
Chk'd. By:	Date	APPD.	Date	E200	4
Project No. 13-043	SCALE 1"=20'-0"				

LHS-E200.dwg jsi 10/26/99 10:14 PR ENGR: ---

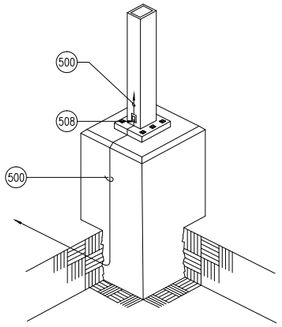

DETAIL G1
STRUCTURE BASE GROUNDING TRANSITION

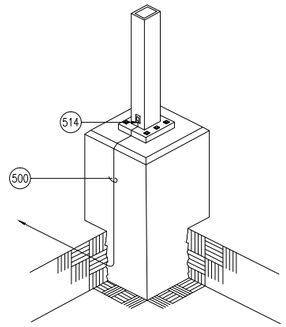

DETAIL G2
STRUCTURE BASE GROUNDING TERMINATION

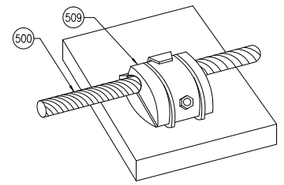

DETAIL G3
STRUCTURE GROUNDING – SINGLE RUN

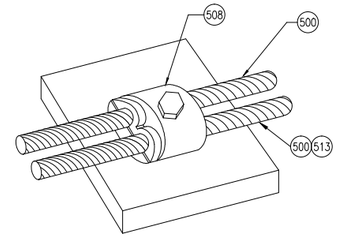

DETAIL G4
STRUCTURE GROUNDING – RUN WITH TAP

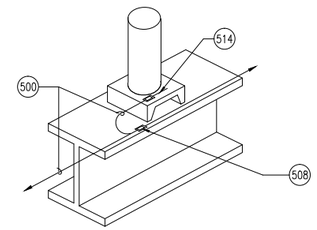

DETAIL G5
SURGE ARRESTOR, C.T. & V.T. GROUNDING

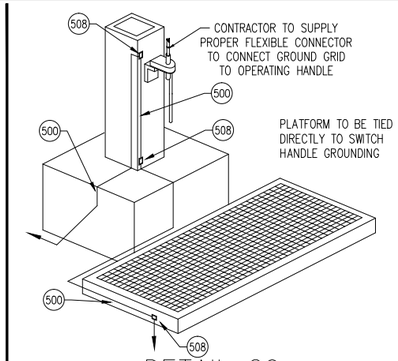

DETAIL G6
12.5 kV SWITCH HANDLE GROUNDING & PLATFORM

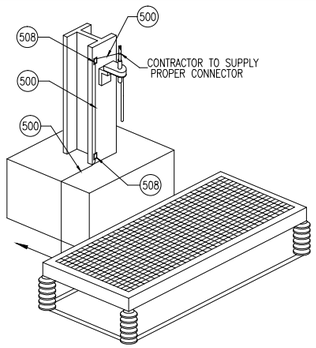

DETAIL G7
46kV SWITCH HANDLE GROUNDING & PLATFORM

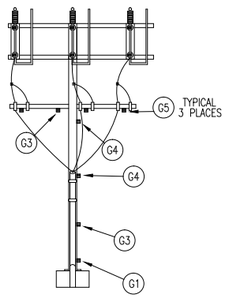

DETAIL G8
RECLOSER STRUCTURE GROUNDING

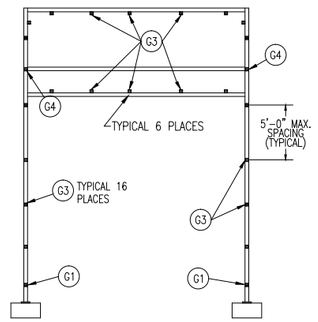

DETAIL G9
VOLTAGE REGULATOR STRUCTURE GROUNDING

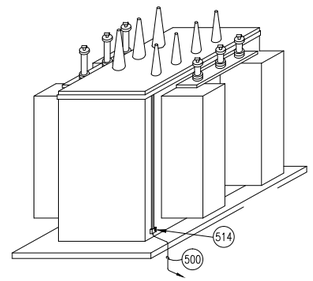

DETAIL G10
3ø TRANSFORMER GROUNDING

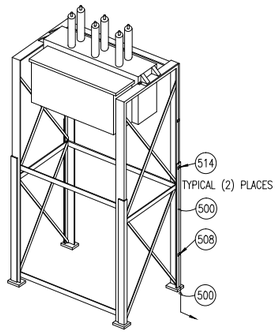

DETAIL G11
3ø RECLOSER GROUNDING

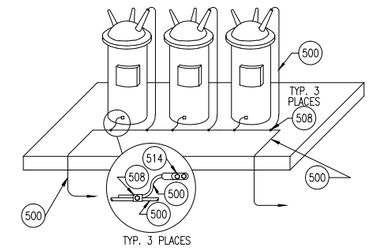

DETAIL G12
3-1ø VOLTAGE REGULATOR GROUNDING

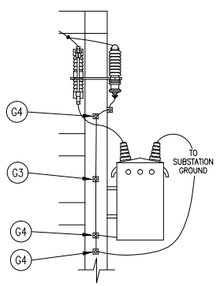

DETAIL G13
STATION SERVICE ASSEMBLY GROUNDING

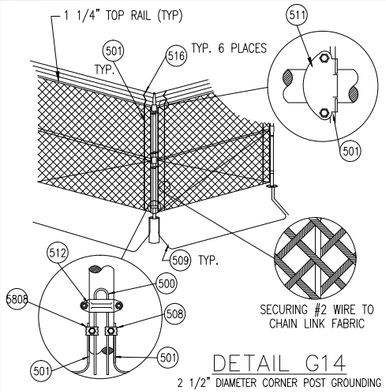

DETAIL G14
2 1/2" DIAMETER CORNER POST GROUNDING

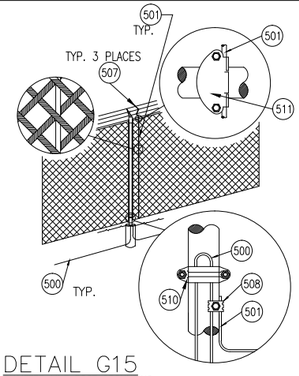

DETAIL G15
2" DIAMETER LINE POST GROUNDING

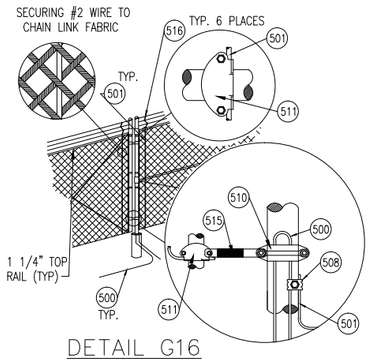

DETAIL G16
3 1/2" DIAMETER GATE POST GROUNDING

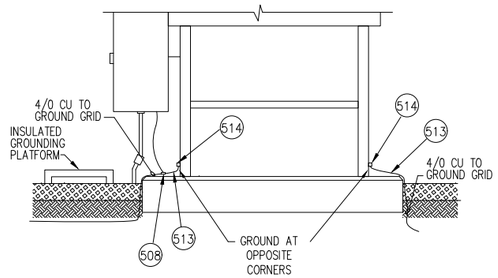

DETAIL G18
46 kV SF6 CIRCUIT BREAKER

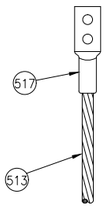

DETAIL G19
4/0 COMPRESSION LUG

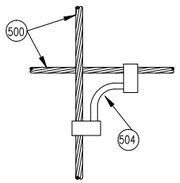

DETAIL G20
#2/0 – #2/0 B.C. CONNECTION

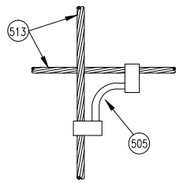

DETAIL G21
#4/0 – #4/0 B.C. CONNECTION

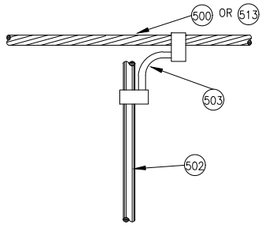

DETAIL G22
#4/0 OR #2/0 B.C. – GROUND ROD CONNECTION

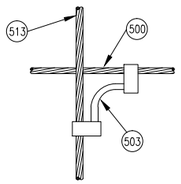

DETAIL G23
#4/0 – #2/0 B.C. CONNECTION

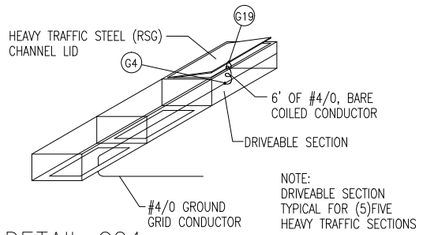

DETAIL G24
HEAVY TRAFFIC CHANNEL COVER GROUND CONNECTION

PRINTED 06/25/2014 FOR
DATE

- ☐ PRELIMINARY
- ☐ DESIGN DEVELOPMENT
- ☒ BIDDING
- ☐ CONSTRUCTION
- ☐ APPROVAL
- ☐ AS BUILT
- ☐ REVISION

No.	DESCRIPTION	BY	DATE	APPD.
3	138kV CONVERSION IFB	JLF	06/25/2014	CWM
2	AS BUILT	JSI	07/01/00	RLH
1	CHANGE IN DETAIL G9	CVM	11/3/99	–

REVISIONS

BID DRAWING ONLY

SALIENT Power Engineering LLC
720-502-6384 | www.salientpower.com

TITLE
LEHI CITY
138kV – 12.47kV SUBSTATION #5
ELECTRICAL ASSEMBLY – GROUNDING DETAILS

Drawn By: JSI	Date 09/20/99	ENGR.	Date	DRAWING No.	REVISION
Chk'd. By:	Date	APPD.	Date	E201	3
Project No. 13-043	SCALE NO SCALE				

LH5-E201.dwg rgrower 11/03/99 20:18 PR ENGR: ---

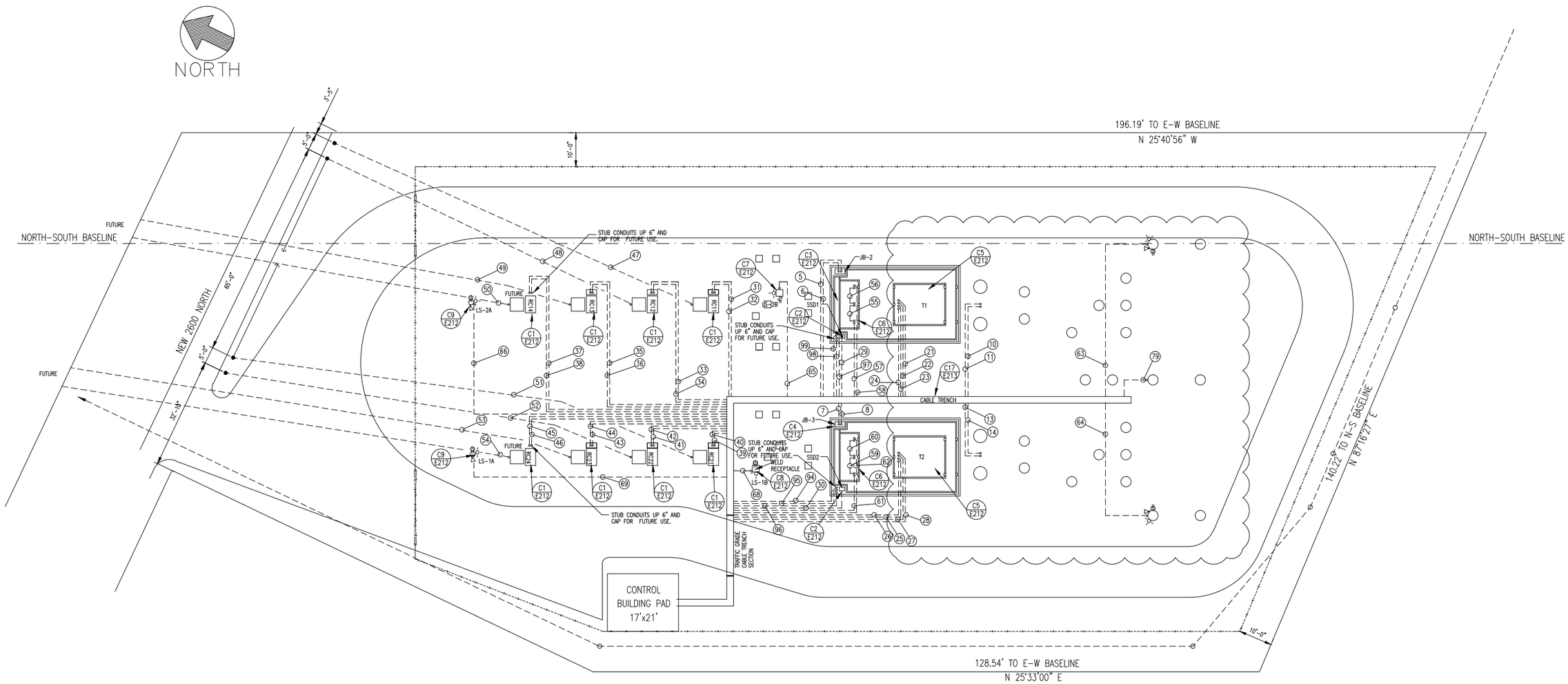

0 5 15 2.5 7.5 30
SCALE: 1"=15'-0"

PRINTED 06/25/2014 FOR
DATE

- ☐ PRELIMINARY
- ☐ DESIGN DEVELOPMENT
- ☒ BIDDING
- ☐ CONSTRUCTION
- ☐ APPROVAL
- ☐ AS BUILT
- ☐ REVISION

No.	DESCRIPTION	BY	DATE	APPD.
4	138KV CONVERSION IFB	ACP	06/25/14	CWM
3	AS BUILT	JSI	07/01/00	RLH
2	REVISED LIGHTING CONDUIT PLAN	SMD	10/12/99	
1	CHANGE ROADWAY	CVM	10/04/99	–

REVISIONS

BID DRAWING ONLY

SALIENT Power Engineering LLC
720-502-6384 | www.salientpower.com

TITLE
LEHI CITY
138kV – 12.47kV SUBSTATION #5
SITE CONDUIT PLAN

Drawn By: ACP	Date 06/25/2014	ENGR.	Date	DRAWING No.	REVISION
Chk'd. By: CWM	Date 06/25/2014	APPD.	Date	E210	4
Project No. ---	SCALE NO SCALE				

L45-E210.dwg klewis 02/09/00 10:21 PR ENGR: ---

CONDUIT SCHEDULE

CONDUIT TAG NUMBER	SIZE INCHES	TYPE	APPROX LENGTH IN FEET	CABLE TAG NUMBER	FROM EQUIP NO	FROM DESCRIPTION	TO EQUIP NO	TO DESCRIPTION
1	1 1/2"	RGS PVC	25	46VT-1M 46VT-1B	JB-1	JUNCTION BOX JB-1	CBL TRN	CABLE TRENCH
1C1	1 1/4"	RGS	15	46VT-1A 46VT-1B 46VT-1C	PB1C	PULLBOX 1C	JB-1	JB-1 JUNCTION BOX
1C2	3/4"	LFMC	5	46VT-1C	46VT-1C	VOLTAGE TRANSFORMER 1C	PB1C	PULLBOX 1C
1B1	1"	RGS	5	46VT-1B 46VT-1A	PB1B	PULLBOX 1B	PB1C	PULLBOX 1C
1B2	3/4"	LFMC	5	46VT-1B	46VT-1B	VOLTAGE TRANSFORMER 1B	PB1B	PULLBOX 1B
1A1	1"	RGC	5	46VT-1A	PB1A	PULLBOX 1A	PB1B	PULLBOX 1B
1A2	3/4"	LFMC	5	46VT-1A	46VT-1A	VOLTAGE TRANSFORMER 1A	PB1A	PULLBOX 1A
2	1 1/2"	RGS PVC	25	46CT-1M	JB-1	JUNCTION BOX JB-1	CBL TRN	CABLE TRENCH
2C1	1 1/4"	RGS	15	46CT-1A 46CT-1B 46CT-1C	PB2C	PULLBOX 2C	JB-1	JB-1 JUNCTION BOX
2C2	3/4"	LFMC	5	46CT-1C	46CT-1C	CURRENT TRANSFORMER 1C	PB2C	PULLBOX 2C
2B1	1"	RGS	5	46CT-1B 46CT-1A	PB2B	PULLBOX 2B	PB2C	PULLBOX 2C
2B2	3/4"	LFMC	5	46CT-1B	46CT-1B	CURRENT TRANSFORMER 1B	PB2B	PULLBOX 2B
2A1	1"	RGC	5	46CT-1A	PB2A	PULLBOX 2A	PB2B	PULLBOX 2B
2A2	3/4"	LFMC	5	46CT-1A	46CT-1A	CURRENT TRANSFORMER 1A	PB2A	PULLBOX 2A
3	1 1/2"	RGS	5	(FUTURE)	JB-4	JUNCTION BOX JB-4	CBL TRN	CABLE TRENCH
3A1	1 1/4" (FUTURE)	RGS	15	(FUTURE)	PB3A	PULLBOX 3A (FUTURE)	JB-4	JB-4 JUNCTION BOX (FUTURE)
3A2	3/4" (FUTURE)	LFMC	5	(FUTURE)	46VT-3A	VOLTAGE TRANSFORMER 3A (FUTURE)	PB3A	PULLBOX 3A (FUTURE)
3B1	1" (FUTURE)	RGS	5	(FUTURE)	PB3B	PULLBOX 3B (FUTURE)	PB3A	PULLBOX 3A (FUTURE)
3B2	3/4" (FUTURE)	LFMC	5	(FUTURE)	46VT-3B	VOLTAGE TRANSFORMER 3B (FUTURE)	PB3B	PULLBOX 3B (FUTURE)
3C1	1" (FUTURE)	RGS	5	(FUTURE)	PB3C	PULLBOX 3C (FUTURE)	PB3B	PULLBOX 3B (FUTURE)
3C2	3/4" (FUTURE)	LFMC	5	(FUTURE)	46VT-3C	VOLTAGE TRANSFORMER 3C (FUTURE)	PB3C	PULLBOX 3C (FUTURE)
4	1 1/2"	RGS PVC	25	(FUTURE)	JB-4	JUNCTION BOX JB-4	CBL TRN	CABLE TRENCH
4A1	1 1/4" (FUTURE)	RGS	15	(FUTURE)	PB4A	PULLBOX 4A (FUTURE)	JB-4	JUNCTION BOX 4 (FUTURE)
4A2	3/4" (FUTURE)	LFMC	5	(FUTURE)	46CT-2A	CURRENT TRANSFORMER 2A (FUTURE)	PB4A	PULLBOX 4A (FUTURE)
4B1	1" (FUTURE)	RGS	5	(FUTURE)	PB4B	PULLBOX 4B (FUTURE)	PB4A	PULLBOX 4A (FUTURE)
4B2	3/4" (FUTURE)	LFMC	5	(FUTURE)	46CT-2B	CURRENT TRANSFORMER 2B (FUTURE)	PB4B	PULLBOX 4B (FUTURE)
4C1	1" (FUTURE)	RGS	5	(FUTURE)	PB4C	PULLBOX 4C (FUTURE)	PB4B	PULLBOX 4B (FUTURE)
4C2	3/4" (FUTURE)	LFMC	5	(FUTURE)	46CT-4C	CURRENT TRANSFORMER 4C (FUTURE)	PB4C	PULLBOX 4C (FUTURE)
5	1"	RGS PVC	45	15VT1M	JB-2	JUNCTION BOX 2	CBL TRN	CABLE TRENCH
5A1	1"	RGS	15	15VT-1A 15VT-1B 15VT-1C	PB5A	PULLBOX 5A	JB-2	JUNCTION BOX 2
5A2	3/4"	LFMC	5	15VT-1A	15VT-1A	VOLTAGE TRANSFORMER 1A	PB5A	PULLBOX 5A
5B1	1"	RGS	5	15VT-1B 15VT-1C	PB5B	PULLBOX 5B	PB5A	PULLBOX 5A
5B2	3/4"	LFMC	5	15VT-1B	15VT-1B	VOLTAGE TRANSFORMER 1B	PB5B	PULLBOX 5B
5C1	1"	RGS	5	15VT-1C	PB5C	PULLBOX 5C	PB5B	PULLBOX 5B
5C2	3/4"	LFMC	5	15VT-1C	15VT-1C	VOLTAGE TRANSFORMER 1C	PB5C	PULLBOX 5C
6	1"	RGS PVC	45	15CT1M	JB-2	JUNCTION BOX 2	CBL TRN	CABLE TRENCH
6A1	1"	RGS	15	15CT-1A 15CT-1B 15CT-1C	PB6A	PULLBOX 6A	JB-2	JUNCTION BOX 2
6A2	3/4"	LFMC	5	15CT-1A	15CT-1A	CURRENT TRANSFORMER 1A	PB6A	PULLBOX 6A
6B1	1"	RGS	5	15CT-1B 15CT-1C	PB6B	PULLBOX 6B	PB6A	PULLBOX 6A
6B2	3/4"	LFMC	5	15CT-1B	15CT-1B	CURRENT TRANSFORMER 1B	PB6B	PULLBOX 6B
6C1	1"	RGS	5	15CT-1C	PB6C	PULLBOX 6C	PB6B	PULLBOX 6B
6C2	3/4"	LFMC	5	15CT-1C	15CT-1C	CURRENT TRANSFORMER 1C	PB6C	PULLBOX 6C
7	1"	RGS PVC	45	15VT2M	JB-3	JUNCTION BOX 3	CBL TRN	CABLE TRENCH
7A1	1"	RGS	15	15VT-2A 15VT-2B 15VT-2C	PB7A	PULLBOX 7A	JB-3	JUNCTION BOX 3
7A2	3/4"	LFMC	5	15VT-2A	15VT-2A	VOLTAGE TRANSFORMER 2A	PB7A	PULLBOX 7A
7B1	1"	RGS	5	15VT-2B 15VT-2C	PB7B	PULLBOX 7B	PB7A	PULLBOX 7A
7B2	3/4"	LFMC	5	15VT-2B	15VT-2B	VOLTAGE TRANSFORMER 2B	PB7B	PULLBOX 7B
7C1	1"	RGS	5	15VT-2C	PB7C	PULLBOX 7C	PB7B	PULLBOX 7B
7C2	3/4"	LFMC	5	15VT-2C	15VT-2C	VOLTAGE TRANSFORMER 2C	PB7C	PULLBOX 7C

CONDUIT SCHEDULE

CONDUIT TAG NUMBER	SIZE INCHES	TYPE	APPROX LENGTH IN FEET	CABLE TAG NUMBER	FROM EQUIP NO	FROM DESCRIPTION	TO EQUIP NO	TO DESCRIPTION
8	1"	RGS PVC	45	15CT2M	JB-3	JUNCTION BOX 3	CBL TRN	CABLE TRENCH
8A1	1"	RGS	15	15CT-2A 15CT-2B 15CT-2C	PB8A	PULLBOX 8A	JB-3	JUNCTION BOX 3
8A2	3/4"	LFMC	5	15CT-2A	15CT-2A	CURRENT TRANSFORMER 2A	PB8A	PULLBOX 8A
8B1	1"	RGS	5	15CT-2B 15CT-2C	PB8B	PULLBOX 8B	PB8A	PULLBOX 8A
8B2	3/4"	LFMC	5	15CT-2B	15CT-2B	CURRENT TRANSFORMER 2B	PB8B	PULLBOX 8B
8C1	1"	RGS	5	15CT-2C	PB8C	PULLBOX 8C	PB8B	PULLBOX 8B
8C2	3/4"	LFMC	5	15CT-2C	15CT-2C	CURRENT TRANSFORMER 2C	PB8C	PULLBOX 8C
9	2"	PVC	35	CS1-A	138CS	46kV CIRCUIT SWITCHER #1	CBL TRN	CABLE TRENCH
10	3"	PVC	35	CS1-C1 CS1-C2	138CS	138kV CIRCUIT SWITCHER #1	CBL TRN	CABLE TRENCH
11	3"	PVC	35	CS1-D1 CS1-D2 CS1-S	138CS	138kV CIRCUIT SWITCHER #1	CBL TRN	CABLE TRENCH
12	2"	PVC	20	CS2-A	138CS	46kV CIRCUIT SWITCHER #2	CBL TRN	CABLE TRENCH
13	3"	PVC	20	CS2-C1 CS2-C2	138CS	138kV CIRCUIT SWITCHER #2	CBL TRN	CABLE TRENCH
14	3"	PVC	20	CS2-D1 CS2-D2 CS2-S	138CS	138kV CIRCUIT SWITCHER #2	CBL TRN	CABLE TRENCH
15	2"	PVC	25	FUTURE	138CS	46kV CIRCUIT SWITCHER #3 (FUTURE)	CBL TRN	CABLE TRENCH
16	3"	PVC	25	FUTURE	138CS	46kV CIRCUIT SWITCHER #3 (FUTURE)	CBL TRN	CABLE TRENCH
17	3"	PVC	25	FUTURE	138CS	46kV CIRCUIT SWITCHER #3 (FUTURE)	CBL TRN	CABLE TRENCH
18	2"	PVC	20	FUTURE	138CS	46kV CIRCUIT SWITCHER #4 (FUTURE)	CBL TRN	CABLE TRENCH
19	3"	PVC	20	FUTURE	138CS	46kV CIRCUIT SWITCHER #4 (FUTURE)	CBL TRN	CABLE TRENCH
20	3"	PVC	20	FUTURE	138CS	46kV CIRCUIT SWITCHER #4 (FUTURE)	CBL TRN	CABLE TRENCH
21	2"	PVC	30	T1-A	T1	138kV-12kV TRANSFORMER #1	CBL TRN	CABLE TRENCH *NOTE 1*
22	2"	PVC	30	T1-C1 T1-C2	T1	138kV-12kV TRANSFORMER #1	CBL TRN	CABLE TRENCH *NOTE 1*
23	2"	PVC	30	T1-D T1-S	T1	138kV-12kV TRANSFORMER #1	CBL TRN	CABLE TRENCH *NOTE 1*
24	2"	PVC	30	SPARE	T1	138kV-12kV TRANSFORMER #1	CBL TRN	CABLE TRENCH *NOTE 1*
25	2"	PVC	60	T2-C1 T2-C2	T2	138kV-12kV TRANSFORMER #2	CBL TRN	CABLE TRENCH *NOTE 1*
26	2"	PVC	60	T2-D T2-S	T2	138kV-12kV TRANSFORMER #2	CBL TRN	CABLE TRENCH *NOTE 1*
27	2"	PVC	60	T2-A	T2	138kV-12kV TRANSFORMER #2	CBL TRN	CABLE TRENCH *NOTE 1*
28	2"	PVC	60	SPARE	T2	138kV-12kV TRANSFORMER #2	CBL TRN	CABLE TRENCH *NOTE 1*
29A	2"	PVC RGC	40	SS-P1	SSD1	STATION SERVICE DISCONNECT TRANSFORMER #1	CBL TRN SSTS	CABLE TRENCH/ STATION SERVICE TRANSFER SWITCH
29	2"	RGC	5	SS-P3	SST1	STATION SERVICE TRANSFORMER #1	SSD1	STATION SERVICE DISCONNECT TRANSFORMER #1
30A	2"	PVC RGC	60	SS-P2	SSD2	STATION SERVICE DISCONNECT TRANSFORMER #2	CBL TRN SSTS	CABLE TRENCH/ STATION SERVICE TRANSFER SWITCH
30	2"	RGC	5	SS-P4	SST2	STATION SERVICE TRANSFORMER #2	SSD2	STATION SERVICE DISCONNECT TRANSFORMER #2
30B	2"	PVC	5	SS-P5	SSTS	STATION SERVICE TRANSFER SWITCH	AC-P1	STATION SERVICE PANEL
31	1 1/2"	PVC	40	RC-11A	12011	12kV RECLOSER 12011	CBL TRN	CABLE TRENCH
32	1 1/2"	PVC	40	RC-11S	12011	12kV RECLOSER 12011	CBL TRN	CABLE TRENCH
33	1 1/2"	PVC	50	RC-12A	12012	12kV RECLOSER 12012	CBL TRN	CABLE TRENCH
34	1 1/2"	PVC	50	RC-12S	12012	12kV RECLOSER 12012	CBL TRN	CABLE TRENCH
35	1 1/2"	PVC	70	RC-13A	12013	12kV RECLOSER 12013	CBL TRN	CABLE TRENCH
36	1 1/2"	PVC	70	RC-13S	12013	12kV RECLOSER 12013	CBL TRN	CABLE TRENCH
37	1 1/2"	PVC	100	FUTURE	12014	12kV RECLOSER 12014 (FUTURE)	CBL TRN	CABLE TRENCH
38	1 1/2"	PVC	100	FUTURE	12014	12kV RECLOSER 12014 (FUTURE)	CBL TRN	CABLE TRENCH
39	1 1/2"	PVC	20	RC-21A	12021	12kV RECLOSER 12021	CBL TRN	CABLE TRENCH
40	1 1/2"	PVC	20	RC-21S	12021	12kV RECLOSER 12021	CBL TRN	CABLE TRENCH
41	1 1/2"	PVC	30	RC-22A	12022	12kV RECLOSER 12022	CBL TRN	CABLE TRENCH
42	1 1/2"	PVC	30	RC-22S	12022	12kV RECLOSER 12022	CBL TRN	CABLE TRENCH
43	1 1/2"	PVC	40	RC-23A	12023	12kV RECLOSER 12023	CBL TRN	CABLE TRENCH
44	1 1/2"	PVC	40	RC-23S	12023	12kV RECLOSER 12023	CBL TRN	CABLE TRENCH
45	1 1/2"	PVC	80	FUTURE	12024	12kV RECLOSER 12024 (FUTURE)	CBL TRN	CABLE TRENCH

CONDUIT SCHEDULE

CONDUIT TAG NUMBER	SIZE INCHES	TYPE	APPROX LENGTH IN FEET	CABLE TAG NUMBER	FROM EQUIP NO	FROM DESCRIPTION	TO EQUIP NO	TO DESCRIPTION
46	1 1/2"	PVC	80	FUTURE	12024	12kV RECLOSER 12024 (FUTURE)	CBL TRN	CABLE TRENCH
47	6"	PVC	120	F-11	12011	12kV RECLOSER #12011	RP	RISER POLE
48	6"	PVC	100	F-12	12012	12kV RECLOSER #12012	RP	RISER POLE
49	6"	PVC	130	F-13	12013	12kV RECLOSER #12013	RP	RISER POLE
50	6"	PVC	115	FUTURE	12014 (FUTURE)	12kV RECLOSER #12014 (FUTURE)	RP	RISER POLE (FUTURE)
51	6"	PVC	140	F-21	12021	12kV RECLOSER #12021	RP	RISER POLE
52	6"	PVC	125	F-22	12022	12kV RECLOSER #12022	RP	RISER POLE
53	6"	PVC	150	F-23	12023	12kV RECLOSER #12023	RP	RISER POLE
54	6"	PVC	135	FUTURE	12024 (FUTURE)	12kV RECLOSER #12024 (FUTURE)	RP	RISER POLE (FUTURE)
55	1"	PVC	20	---	RG1A	12kV REGULATOR #1A	RG1B	12kV REGULATOR #1B
56	1"	PVC	20	---	RG1B	12kV REGULATOR #1B	RG1C	12kV REGULATOR #1C
57	1"	PVC	20	---	RG1A	12kV REGULATOR #1A	CBL TRN	CABLE TRENCH
58	1"	PVC	30	---	RG2C	12kV REGULATOR #1C	CBL TRN	CABLE TRENCH
59	1"	PVC	20	---	RG2A	12kV REGULATOR #2A	RG2B	12kV REGULATOR #2B
60	1"	PVC	20	---	RG2B	12kV REGULATOR #2B	RG2C	12kV REGULATOR #2C
61	1"	PVC	70	---	RG2A	12kV REGULATOR #2A	CBL TRN	CABLE TRENCH
62	1"	PVC	70	---	RG2C	12kV REGULATOR #2C	CBL TRN	CABLE TRENCH
63	2"	PVC	50	YR/L-1 YF-1	CBL TRN	CABLE TRENCH	LR	LUMINAIRE, FLOODLIGHT & RECEPTACLE EAST DEAD-END LIGHT
64	2"	PVC	20	YR/L-1	CBL TRN	CABLE TRENCH	LR	LUMINAIRE, FLOODLIGHT & RECEPTACLE WEST DEAD-END LIGHT
65	2"	PVC	50	YR/L-1	CBL TRN	CABLE TRENCH	LR	LUMINAIRE & RECEPTACLE (12kV YARD)
66	2"	PVC	107	YR/L-1 YF-1	CBL TRN	CABLE TRENCH	LR	LUMINAIRE, FLOODLIGHT & RECEPTACLE (POLE BAY #1)
67	2"	PVC	55	YR/L-2 YF-1	CBL TRN	CABLE TRENCH	LR	LUMINAIRE & RECEPTACLE & FLOODLIGHT TAKE-OFF(BAY #2)
68	2"	PVC	10	YR/L-2 WR-1	CBL TRN	CABLE TRENCH	LR	LUMINAIRE & RECEPTACLE, WELDER (12kV YARD)
69	2"	PVC	80	YR/L-2 YF-1	CBL TRN	CABLE TRENCH	LR	LUMINARE, FLOODLIGHT RECEPTACLE (POLE BAY #2)
70	2"	PVC	10	T1-D CB1-D1 CB1-D2	DCP1	DC PANEL	CBL TRN	CABLE TRENCH
71	2"	PVC	10	T2-D CB2-D1 CB2-D2	DCP1	DC PANEL	CBL TRN	CABLE TRENCH
72	2"	PVC	10	CP-DC1 CP-DC2 CP-DC3	DCP1	DC PANEL	CBL TRN	CABLE TRENCH
73	2"	PVC	10	SPARE	DCP1	DC PANEL	CBL TRN	CABLE TRENCH
74	2"	PVC	8	YR/L-1, T1-A CB1-A, RC-21A RC-22A, RC-23A	ACP1	AC PANEL	CBL TRN	CABLE TRENCH
75	2"	RGS PVC	8	YR/L-2, T2-A CB2-A, RC-11A RC-12A, RC-13A	ACP1	AC PANEL	CBL TRN	CABLE TRENCH
76	2"	RGS PVC	8	CP-AC1 CP-AC2 WR-1 YF-1	ACP1	AC PANEL	CBL TRN	CABLE TRENCH
77	2"	RGS PVC	8	SPARE	ACP1	AC PANEL	CBL TRN	CABLE TRENCH
78	2"	PVC	8	SPARE	ACP1	AC PANEL	CBL TRN	CABLE TRENCH
79	2"	PVC	12	46VT-1M 46CT-1M	M	138kV METER	CBL TRN	CABLE TRENCH
80	2"	PVC	12	15CT-2M 15VT-2M	M2	METER BAY #2	CBL TRN	CABLE TRENCH
81	2"	PVC	12	15CT-1M 15VT-1M	M1	METER BAY #1	CBL TRN	CABLE TRENCH
82	2"	PVC	12	SPARE	FM	FUTURE METER	CBL TRN	CABLE TRENCH
83	3"	PVC	10	PHONE	PH	TELEPHONE	CBL TRN	CABLE TRENCH
94	1 1/2"	PVC	30	SPARE	---	BAY T2 REGULATOR STRUCTURE	CBL TRN	CABLE TRENCH
95	1 1/2"	PVC	30	SPARE	---	BAY T2 REGULATOR STRUCTURE	CBL TRN	CABLE TRENCH
96	1 1/2"	PVC	30	SPARE	---	BAY T2 REGULATOR STRUCTURE	CBL TRN	CABLE TRENCH
97	1 1/2"	PVC	20	SPARE	---	BAY T1 REGULATOR STRUCTURE	CBL TRN	CABLE TRENCH
98	1 1/2"	PVC	20	SPARE	---	BAY T1 REGULATOR STRUCTURE	CBL TRN	CABLE TRENCH
99	1 1/2"	PVC	20	SPARE	---	BAY T1 REGULATOR STRUCTURE	CBL TRN	CABLE TRENCH

NOTE 1:
REUSE EXISTING CONDUIT IN FOUNDATION IF POSSIBLE.
ABOVE GROUND CONDUIT BY CONTRACTOR

PRINTED 06/24/2014 FOR
DATE

- ☐ PRELIMINARY
- ☐ DESIGN DEVELOPMENT
- ☒ BIDDING
- ☐ CONSTRUCTION
- ☐ APPROVAL
- ☐ AS BUILT
- ☐ REVISION

SALIENT Power Engineering LLC
720-502-6384 | www.salientpower.com

No.	DESCRIPTION	BY	DATE	APPD.
4	138KV CONVERSION IFB	ACP	06/25/14	CWM
3	AS BUILT	JSI	07/01/00	RLH
2	CHANGE IN PLAN	SMB	10/12/99	
1	CHANGE IN PLAN	CVM	10/4/99	–

REVISIONS

BID DRAWING ONLY

TITLE
LEHI CITY
138kV – 12.47kV SUBSTATION #5
CONDUIT SCHEDULE

Drawn By: ACP	Date 06/25/2014	ENGR.	Date	DRAWING No. E211	REVISION 4
Chk'd. By: CWM	Date 06/25/2014	APPD.	Date		
Project No. ---	SCALE NO SCALE				

LH5-E211.dwg jai 02/16/00 10:05 PR ENGR: ---

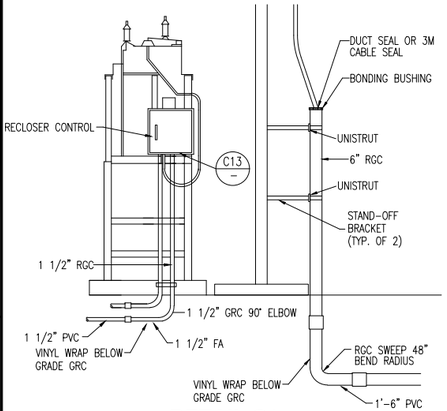

DETAIL C1
RECLOSER ELECTRONIC CONTROL

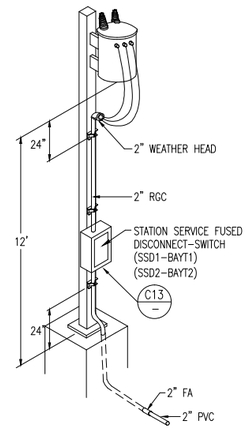

DETAIL C2
STATION SERVICE STRUCTURE CONDUIT DETAIL

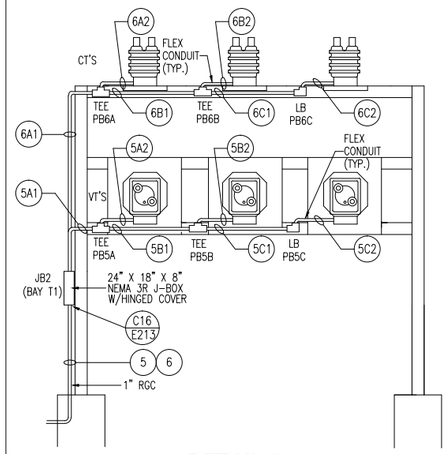

DETAIL C3
VT & CT CONDUIT DETAIL

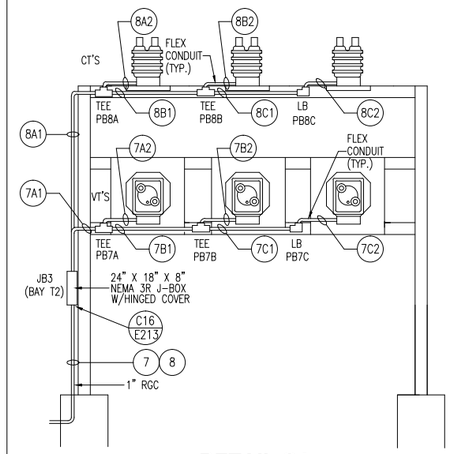

DETAIL C4
VT & CT CONDUIT DETAIL

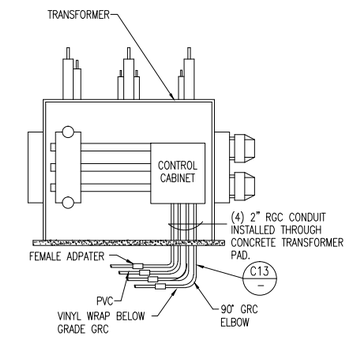

DETAIL C5
TRANSFORMER CONTROL

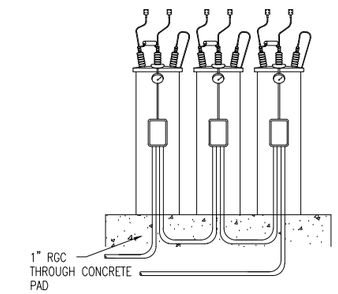

DETAIL C6
REGULATOR SCADA CONDUIT DETAIL

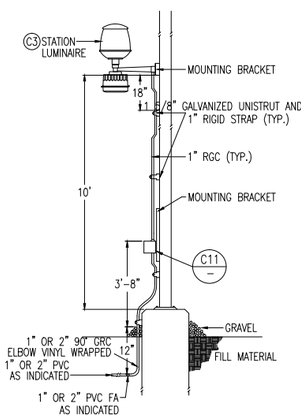

DETAIL C7
LIGHTING ARRANGEMENT

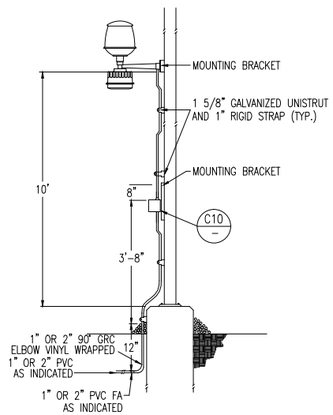

DETAIL C8

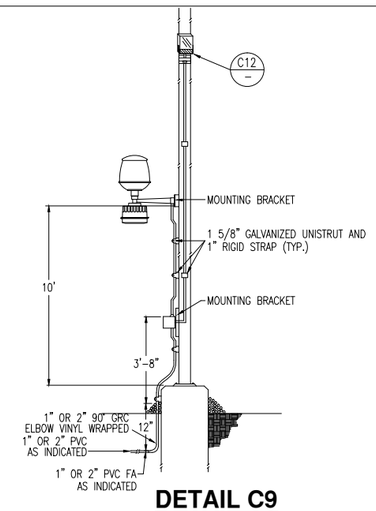

DETAIL C9
LIGHTING ARRANGEMENT

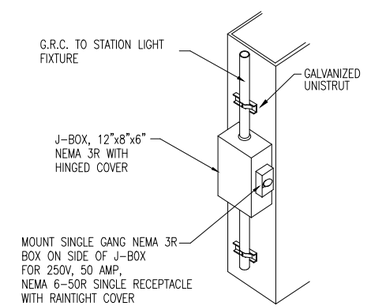

DETAIL C10
CONDUIT – 240V RECEPTACLES ASSEMBLY

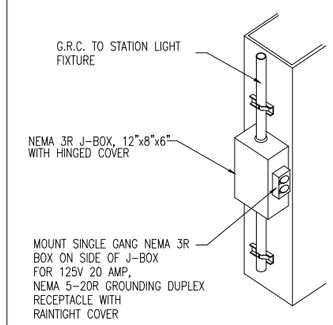

DETAIL C11
CONDUIT– 120V RECEPTACLE ASSEMBLY

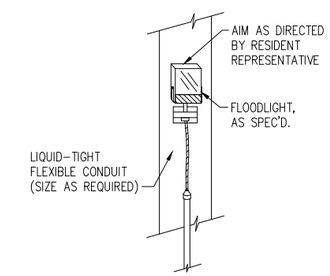

DETAIL C12
FLOODLIGHT

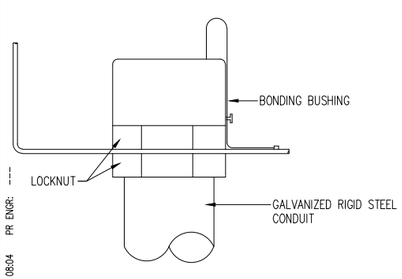

DETAIL C13
TYPICAL RIGID STEEL CONDUIT TERMINATION AT EQUIPMENT

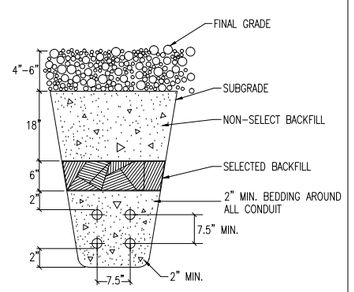

DETAIL C14
TYPICAL MULTI-CONDUIT BURIAL – 600V CABLE

GENERAL NOTES

1. ALL UNISTRUT REQUIRED FOR ATTACHING CONDUIT AND BOXES TO THE STEEL SHALL BE PROVIDED AS PART OF THE GALVANIZED STEEL STRUCTURE ASSEMBLY.
2. MOUNTING PLATES FOR LIGHTS, RECEPTACLES, J-BOXES, CURRENT TRANSFORMERS, VOLTAGE TRANSFORMERS, STATION SERVICE TRANSFORMERS AND ALL OTHER EQUIPMENT SHALL BE PROVIDED AS PART OF THE GALVANIZED STEEL STRUCTURE ASSEMBLY.
3. ALL SUBSTATION CONDUIT SHALL BE GALVANIZED RIGID STEEL CONDUIT. ALL CONDUIT SHALL BE GROUNDED AT EACH END.
4. FIBERCRETE ONE PIECE BASE P/N FC-63-69-20. DETAIL C13.
5. RGC – RIGID GALVANIZED STEEL CONDUIT

PRINTED 06/25/14 FOR
DATE

- ☐ PRELIMINARY
- ☐ DESIGN DEVELOPMENT
- ☒ BIDDING
- ☐ CONSTRUCTION
- ☐ APPROVAL
- ☐ AS BUILT
- ☐ REVISION

SALIENT Power Engineering LLC
720-502-6384 | www.salientpower.com

No.	DESCRIPTION	BY	DATE	APPD.
3	138KV CONVERSION IFB	JLF	06/25/14	CWM
2	AS BUILT	JSI	07/01/00	RLH
1	CHANGE IN C16 AND C17	CVM	10/07/99	–

REVISIONS

BID DRAWING ONLY

TITLE
LEHI CITY
138kV – 12.47kV SUBSTATION #5
ELECTRICAL ASSEMBLY – CONDUIT DETAILS

Drawn By:	JSI	Date	09/20/99	ENGR.	CM	Date	
Chk'd. By:	KC	Date	12/1/99	APPD.		Date	
Project No.	13-043	SCALE	NO SCALE				

DRAWING No. E212 REVISION 3

LH5-E212.dwg klewis 02/08/00 08:04 PR ENGR: ---

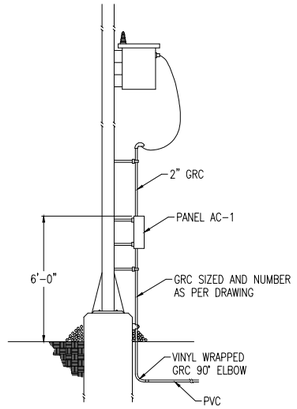

DETAIL C1
STATION SERVICE STRUCTURE CONDUIT DETAIL

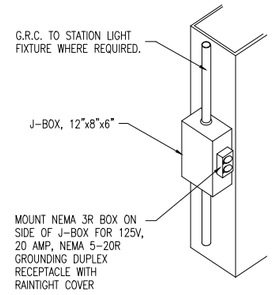

DETAIL C2
CONDUIT- 120V RECEPTACLES ASSEMBLY

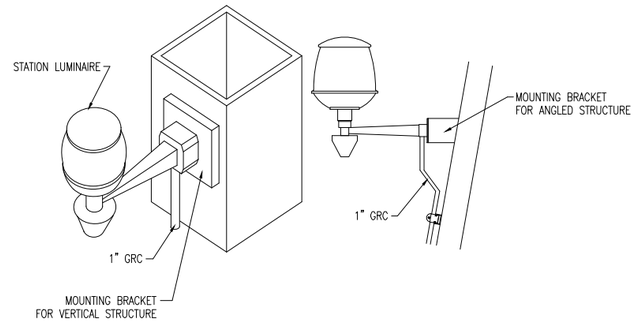

DETAIL C3
CONDUIT - STATION LUMINAIRE

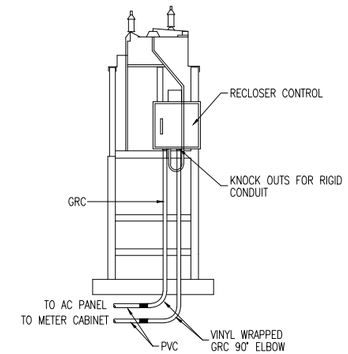

DETAIL C4
RECLOSER ELECTRONIC CONTROL

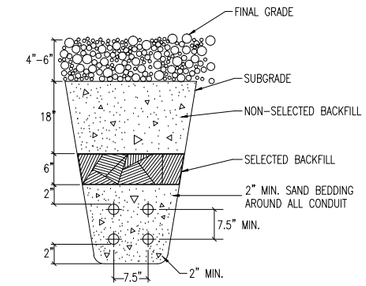

DETAIL C5
TYPICAL MULTI - CONDUIT BURIAL - 600V CABLE

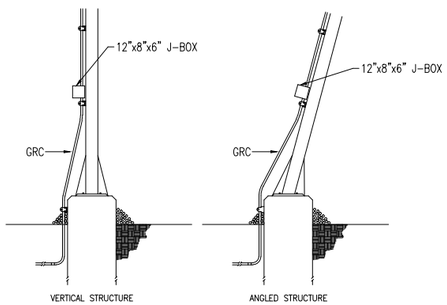

DETAIL C6

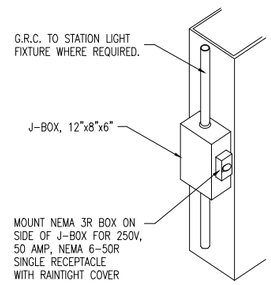

DETAIL C7
CONDUIT - 240V RECEPTACLES ASSEMBLY

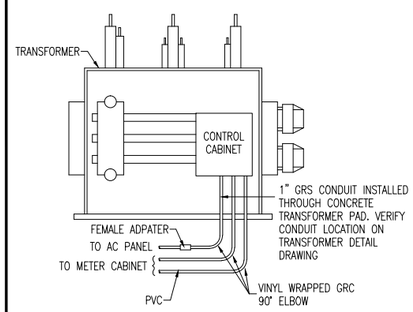

DETAIL C8
TRANSFORMER FAN CONTROL/CT CABINET

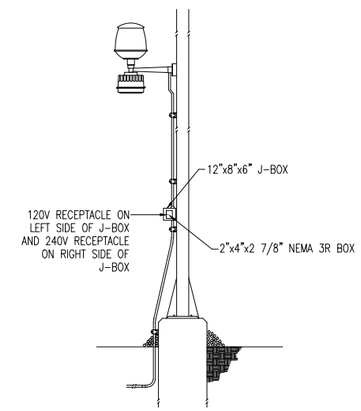

DETAIL C9

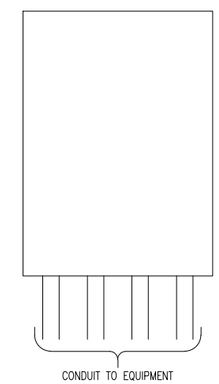

DETAIL C10
JUNCTION BOX DETAIL

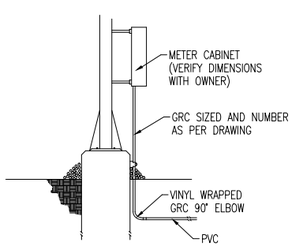

DETAIL C11
METER CABINET

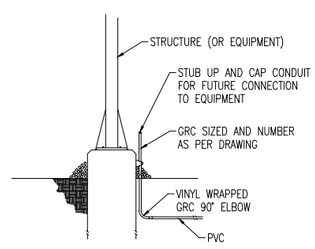

DETAIL C12

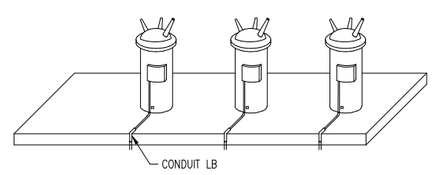

DETAIL C13
VOLTAGE REGULATOR CONDUIT DETAIL

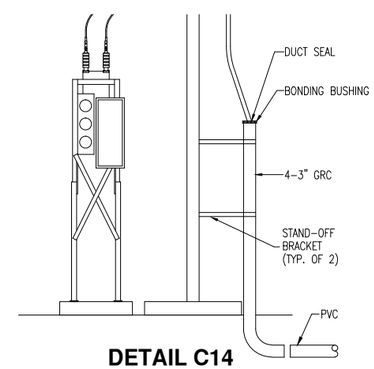

DETAIL C14
RECLOSER CONDUIT DETAIL

GENERAL NOTES

1. ALL UNISTRUT REQUIRED FOR ATTACHING CONDUIT AND BOXES TO THE STEEL SHALL BE PROVIDED AS PART OF THE GALVANIZED STEEL STRUCTURE ASSEMBLY.
2. MOUNTING PLATES FOR LIGHTS, RECEPTACLES, J-BOXES, CURRENT TRANSFORMERS, VOLTAGE TRANSFORMERS, STATION SERVICE TRANSFORMERS AND ALL OTHER EQUIPMENT SHALL BE PROVIDED AS PART OF THE GALVANIZED STEEL STRUCTURE ASSEMBLY.
3. ALL SUBSTATION CONDUIT SHALL BE GALVANIZED RIGID STEEL CONDUIT. ALL CONDUIT SHALL BE GROUNDED AT EACH END.

PRINTED 06/25/14 FOR
DATE

- ☐ PRELIMINARY
- ☐ DESIGN DEVELOPMENT
- ☒ BIDDING
- ☐ CONSTRUCTION
- ☐ APPROVAL
- ☐ AS BUILT
- ☐ REVISION

SALIENT Power Engineering LLC
720-502-6384 | www.salientpower.com

No.	DESCRIPTION	BY	DATE	APPD.
2	138KV CONVERSION IFB	JLF	06/25/14	CWM
1	AS BUILT	JSI	07/01/00	RLH

REVISIONS

BID DRAWING ONLY

TITLE
LEHI CITY
138kV - 12.47kV SUBSTATION #5
ELECTRICAL ASSEMBLY - CONDUIT DETAILS

Drawn By: JSI	Date 09/20/99	ENGR.	Date	DRAWING No.	REVISION
Chk'd. By:	Date	APPD.	Date	E212A	2
Project No. 13-043	SCALE NO SCALE				

LH5-E212A.dwg jsi 10/04/99 09:16 RR ENGR: ----

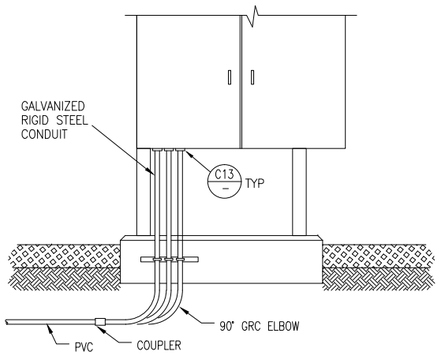

DETAIL C15
46kV SF6 CIRCUIT BREAKER

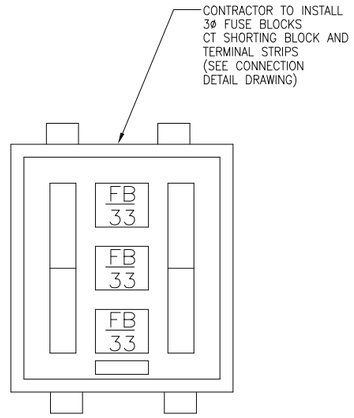

DETAIL C16
46kV & 15kV CT & VT JUNCTION BOX

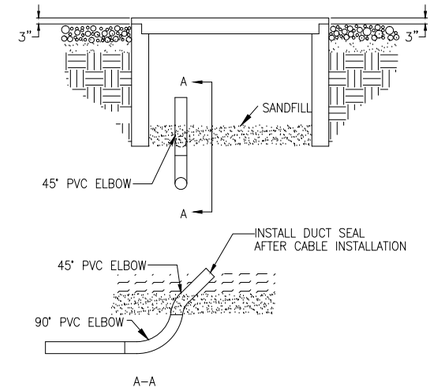

DETAIL C17
CABLE TRENCH DETAIL

PRINTED 06/25/14 FOR
DATE

- ☐ PRELIMINARY
- ☐ DESIGN DEVELOPMENT
- ☒ BIDDING
- ☐ CONSTRUCTION
- ☐ APPROVAL
- ☐ AS BUILT
- ☐ REVISION

SALIENT
Power Engineering LLC
720-502-6384 | www.salientpower.com

No.	DESCRIPTION	BY	DATE	APPD.
3	138kV CONVERSION IFB	JLF	06/25/14	CWM
2	AS BUILT	JSI	07/01/00	RLH
1	CHANGE IN C16 AND C17	CVM	10/07/99	–

REVISIONS

BID DRAWING ONLY

TITLE
LEHI CITY
138kV – 12.47kV SUBSTATION #5
ELECTRICAL ASSEMBLY – CONDUIT DETAILS

Drawn By: JSI	Date 09/20/99	ENGR.	Date	DRAWING No. E213
Chk'd. By:	Date	APPD.	Date	REVISION 3
Project No. 13-043	SCALE NO SCALE			

LHS-E213A.dwg klewis 02/08/00 08:30 PR ENGR: ---

SUBSTATION PARTS LIST

ITEM	QTY.	DESCRIPTION	MFR.	CAT. #
S1	11	SIGN: "DANGER HIGH VOLTAGE" 11x15	THOMAS & BETTS	WVP10-DAN76
S2	1	HOTSTICK W/SWITCH HEAD 1 1/2"x12'	HASTINGS	462-12
S3	1	HOTSTICK STORAGE CONTAINER ASSEMBLY 4"ID.x13'	HASTINGS	01-3253

FOUNDATION LEGEND

- SUBSTATION FENCE
- HOT STICK STORAGE CONTAINER
- "DANGER HIGH VOLTAGE NO TRESSPASSING" SIGN
- F1 / F01 — FOUNDATION DETAIL NUMBER REFER TO REFERENCED DRAWING

GENERAL NOTES

1. REFER TO CONSTRUCTION SPECIFICATIONS FOR MATERIAL AND INSTALLATION REQUIREMENTS AND SPECIFIC DETAILS, UNLESS OTHERWISE NOTED.
2. REFER TO FOUNDATION DETAIL DRAWINGS, C002, C003, C004 & C005.
3. ALL ANCHOR BOLTS, NUTS AND WASHERS SHALL BE GALVANIZED AFTER FABRICATION.
4. CONCRETE SHALL HAVE A MINIMUM COMPRESSION STRENGTH OF 4000 PSI UNLESS OTHERWISE NOTED.
5. REINFORCING STEEL SHALL CONFIRM TO ASTM A615 GRADE 60.
6. MINIMUM REBAR COVER SHALL BE 3" INCHES, EXCEPT AS NOTED.
7. TOP OF CONCRETE ELEVATIONS SHOWN ON FOUNDATION PLAN.
8. ALL ANCHOR BOLTS SHALL BE SET WITH TWO HEAVY HEXNUTS WITH WASHERS. ONE ABOVE AND ONE BELOW BASEPLATE FOR LEVELING. GROUT IS REQUIRED BETWEEN BASEPLATE AND TOP OF CONCRETE. SET LOWER NUTS AS CLOSE AS POSSIBLE TO TOP OF CONCRETE.

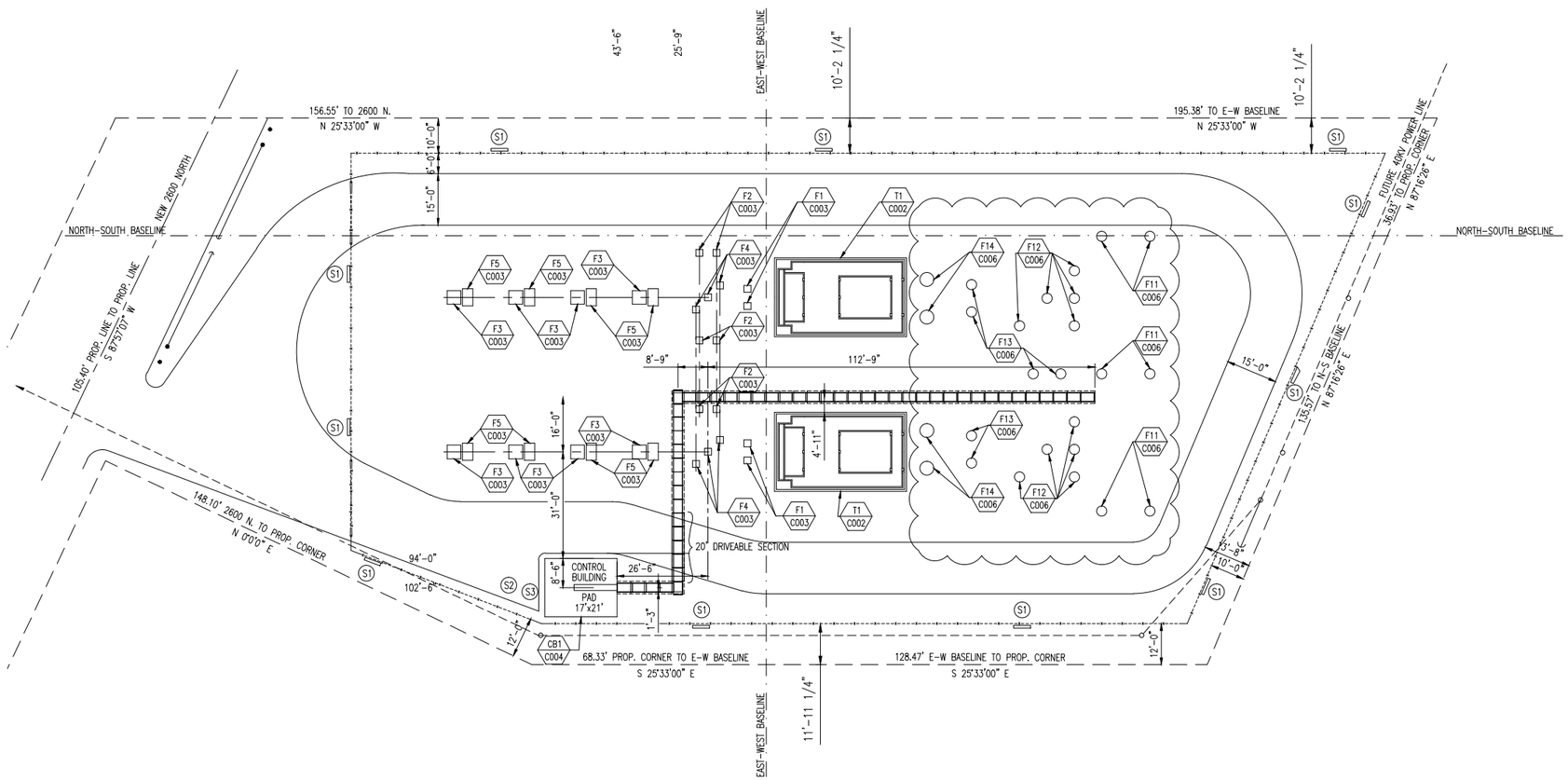

PLAN @ T/CONC. EL. 4620'-0" U.N.
SCALE: 1"=20'-0"

PRINTED 06/25/2014 FOR
DATE

- ☐ PRELIMINARY
- ☐ DESIGN DEVELOPMENT
- ☒ BIDDING
- ☐ CONSTRUCTION
- ☐ APPROVAL
- ☐ AS BUILT
- ☐ REVISION

No.	DESCRIPTION	BY	DATE	APPD.
4	138KV CONVERSION IFB	JLF	06/24/14	CWM
3	AS BUILT	JSI	07/01/00	RLH
2	CHANGE ROADWAY	CVM	10/04/99	
1	CHANGE B.L. 45' & 3" ON HIGH SIDE	CVM	9/10/99	

REVISIONS

BID DRAWING ONLY

SALIENT Power Engineering LLC
720-502-6384 | www.salientpower.com

TITLE
LEHI CITY
138KV-12.47KV SUBSTATION #5

FENCE AND FOUNDATION GENERAL LOCATION PLAN

Drawn By:	RDG	Date	04/22/99	ENGR.	CBM	Date	04/22/99
Chk'd. By:	AJT	Date	07/13/99	APPD.	AJT	Date	07/13/99
Project No.	13-043	SCALE	1" = 20'-0"				

DRAWING No. C001 REVISION 4

LJ15-C001.dwg kc 12/07/99 12:08 PR ENGR: EJS

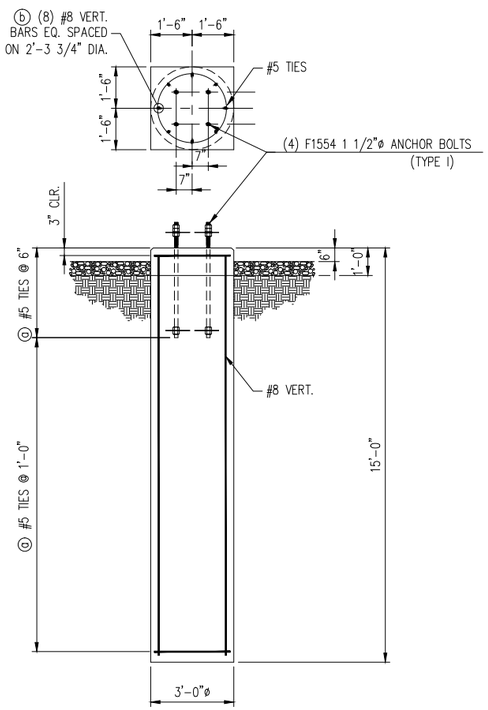

F11 C007 138kV DEAD-END STRUCTURE
6 REQUIRED

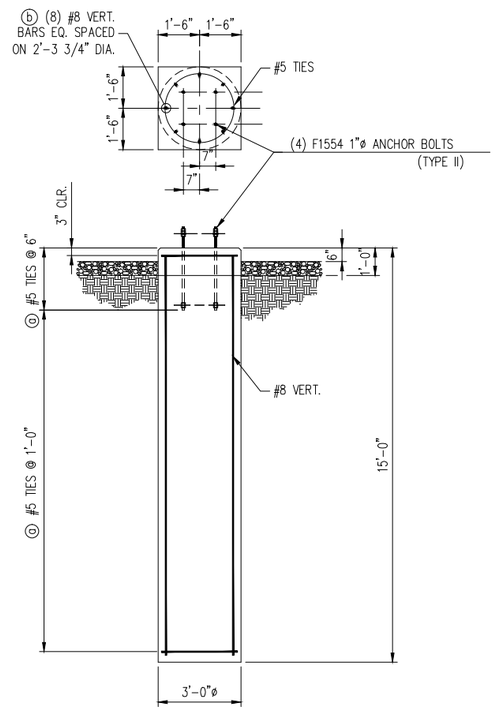

F12 C007 138kV 1PH BUS SUPPORT
10 REQUIRED

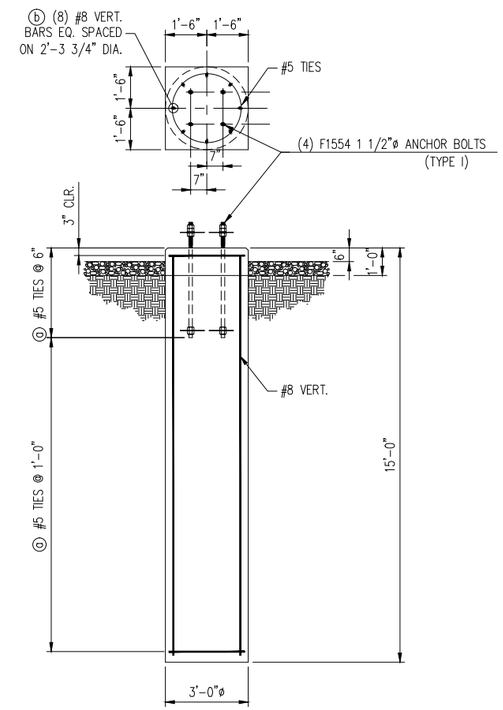

F13 C007 138kV SWITCH STAND
6 REQUIRED

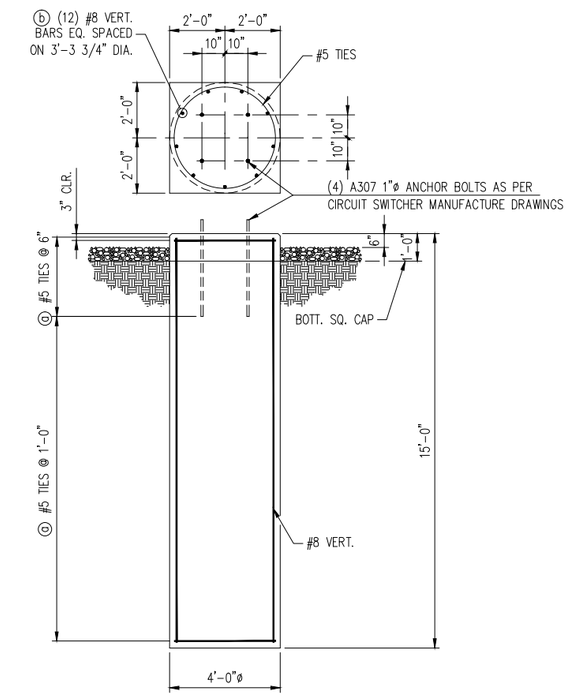

F14 C003 138kV CIRCUIT SWITCHER STRUCTURE
4 REQUIRED

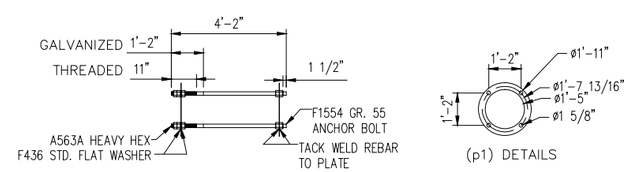

ANCHOR BOLT BILL OF MATERIAL
(4) 1 1/2" F1554 GR. 55 BOLT
(8) 1 1/2" F436 STD. FLAT WASHER
(20) 1 1/2" A563A HEAVY HEX NUT
(2) 3/16" PLATE (p1)

ANCHOR BOLT CAGE TYPE I

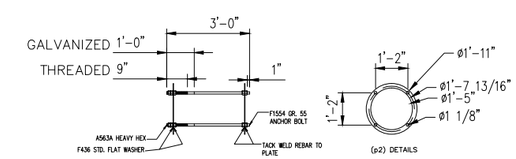

ANCHOR BOLT BILL OF MATERIAL
(4) 1" F1554 GR. 55 BOLT
(8) 1" F436 STD. FLAT WASHER
(20) 1" A563A HEAVY HEX NUT
(2) 3/16" PLATE (p2)

ANCHOR BOLT CAGE TYPE II

(6) 138kV DEAD-END STRUCTURE							
DETAIL	QTY	SHAPE	SIZE	LENGTH(EA.) FT.	LENGTH(EA.) INCH	TOTAL FT.	TOTAL INCH
F11 (QTY. EACH)							
ⓐ	19	TIES (DIA.)	#5	2'	6"	256'	8"
ⓑ	8	STRAIGHT	#8	14'	6"	377'	8"

(6) 138KV SWITCH STAND							
DETAIL	QTY	SHAPE	SIZE	LENGTH FT.	LENGTH INCH	TOTAL FT.	TOTAL INCH
F13 (QTY. EACH)							
ⓐ	19	TIES (DIA.)	#5	2'	6"	556'	1"
ⓑ	8	STRAIGHT	#8	14'	6"	764'	6"

(10) 138KV 1PH BUS SUPPORT							
DETAIL	QTY	SHAPE	SIZE	LENGTH FT.	LENGTH INCH	TOTAL FT.	TOTAL INCH
F12 (QTY. EACH)							
ⓐ	19	TIES (DIA.)	#4	2'	6"	1073'	0"
ⓑ	8	STRAIGHT	#8	14'	6"	669'	0"

(4) 138KV CIRCUIT SWITCHER STRUCTURE							
DETAIL	QTY	SHAPE	SIZE	LENGTH FT.	LENGTH INCH	TOTAL FT.	TOTAL INCH
F14 (QTY. EACH)							
ⓐ	19	TIES (DIA.)	#5	3'	6"	556'	1"
ⓑ	8	STRAIGHT	#8	14'	6"	764'	6"

NOTE:
1. TAKEOFFS BASED ON HORIZONTAL TIES OVERLAPPING 24 INCHES.
2. CLEAR COVER TO BE 3" MINIMUM.
3. REBAR SHALL BE ASTM A615. GRADE 60.

PRINTED 06/25/2014 FOR
DATE
- ☐ PRELIMINARY
- ☐ DESIGN DEVELOPMENT
- ☒ BIDDING
- ☐ CONSTRUCTION
- ☐ APPROVAL
- ☐ AS BUILT
- ☐ REVISION

SALIENT Power Engineering LLC
720-502-6384 | www.salientpower.com

No.	DESCRIPTION	BY	DATE	APPD.
A	138KV CONVERSION IFB	JLF	06/24/14	CWM

REVISIONS

BID DRAWING ONLY

TITLE
LEHI CITY
46kV – 12.47kV SUBSTATION #5
FOUNDATION DETAILS – DRILLED PIERS

Drawn By:	Date	ENGR.	Date	DRAWING No.	REVISION
Chk'd. By:	Date	APPD.	Date	C006	A
Project No. 013-043	SCALE 3/8"=1'-0"				

LHS-C005.dwg jsi 10/16/02 13:00 PR ENGR: CWM

BILL OF MATERIAL					
QTY	MARK	DESCRIPTION	FEET	INCH	REMARKS
		TOP FRAME (B11)			
4	a	L3x3x1/4	4'	1"	FRAME
4	b	L3x3x1/4	0	11 1/2"	LEGS
4	c	PL 1/2"x6"	0	6"	BASE PLATE
1	d	PL 1/4"x2 1/2"	0	2 1/2"	GROUND TABS
		GRATING (B11)			
2	e	1 1/4"x3/16"	AS	NOTED	GRATE PLATFORM

NOTE: TACKWELD GRATING INSIDE FRAME.

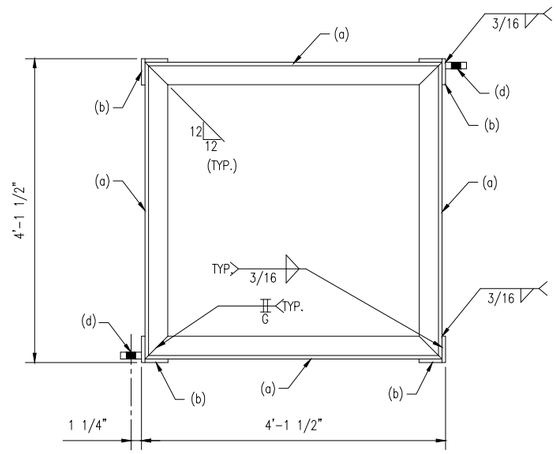

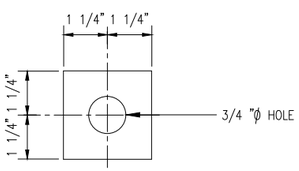

DETAIL OF (d)

NO SCALE

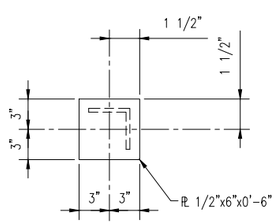

DETAIL OF (c)

NO SCALE

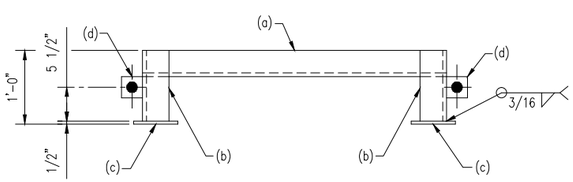

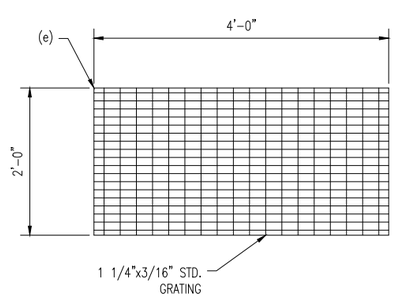

B11-GROUNDED SWITCH PLATFORM

(4) REQ'D

BILL OF MATERIAL					
QTY	MARK	DESCRIPTION	FEET	INCH	REMARKS
		TOP FRAME (B12)			
4	a	L3x3x1/4	4'	0"	FRAME
4	b	PL 1/4"x6"	0	6"	MOUNTING PLATE
2	d	1'-11" STEEL GRATE	3'	11"	PLATFORM SURFACE
		BOTTOM FRAME (B12)			
4	b	PL 1/4"x6"	0	6"	MOUNTING PLATE
4	c	BAR 1/4"x3"	4'	0"	FRAME

GENERAL NOTES

1. STRUCTURES SHALL BE HOT DIP GALVANIZED AFTER FABRICATION.
2. DIMENSIONS NOTED THUS (△) TO BE DETERMINED BY VENDOR BASED ON EQUIPMENT FURNISHED.
3. VENT HOLES SHALL BE PLACED WHERE NECESSARY FOR PROPER VENTNG DURING GALVANIZING.
4. 1/4" WIRE MESH OVER ALL EXPOSED VENT HOLES.
5. ALL MOUNTING PLATES SHALL BE 1/4" PLATE STEEL MINIMUM.
6. SWITCH SUPPORT SHALL HAVE ONE GROUNDING TAB ON EACH VERTICAL LEG ON THE OUTSIDE FACE OF MEMBER 1'-0" ABOVE THE BASEPLATE.
7. MATERIAL SIZE LISTED IN "MATERIAL LISTS" ARE FOR RECOMMENDED MINIMUMS ONLY. CONTRACTOR TO DETERMINE SIZE REQUIREMENTS BASED ON HIS CALCULATIONS IN ACCORDANCE WITH THE REQUIREMENTS OF THE SPECIFICATIONS.
8. NUMBERS IN CIRCLE (7) REFER TO ITEM NUMBERS ON MATERIAL LIST.
9. ALL WELDS MUST BE FULL SEAL WELDS.
10. LOADING CRITERIA TABULATED UNDER "DESIGN APPLICATION" IS FOR ALL STRUCTURES.
11. COORDINATE GROUP OPERATED SWITCH HANDLE HEIGHTS WITH INSULATED PLATFORMS USED.

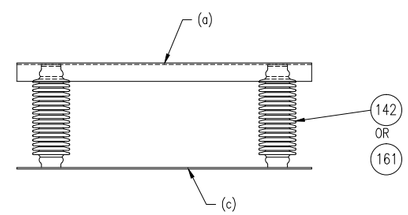

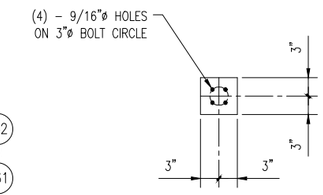

DETAIL OF (b)

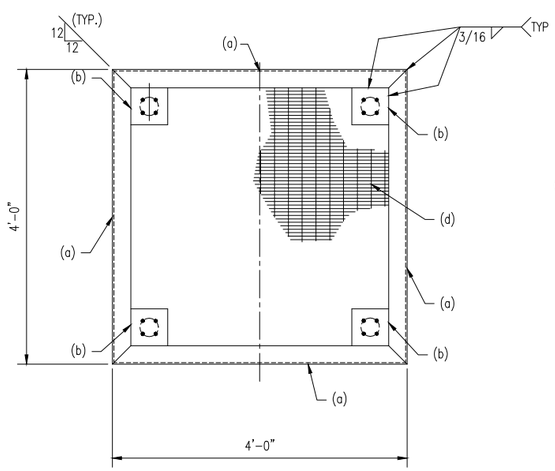

TOP FRAME

(B12)

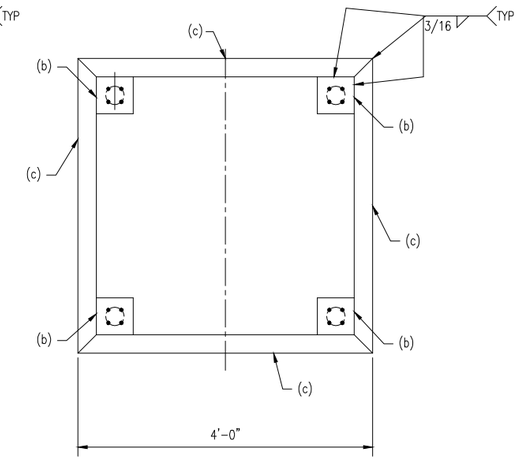

BOTTOM FRAME

(B12)

B12-INSULATED SWITCH PLATFORM

(9) REQ'D

PRINTED 06/25/14 FOR
DATE

- ☐ PRELIMINARY
- ☐ DESIGN DEVELOPMENT
- ☒ BIDDING
- ☐ CONSTRUCTION
- ☐ APPROVAL
- ☐ AS BUILT
- ☐ REVISION

REVISIONS				
No.	DESCRIPTION	BY	DATE	APPD.
3	138kV CONVERSION IFB	JLF	06/24/14	JLF
2	AS BUILT	JSI	07/01/00	RLH
1	REVISED CALLOUTS	JSI	10/04/99	–

BID DRAWING ONLY

SALIENT Power Engineering LLC
303-358-2525 | www.salientpower.com

TITLE: LEHI
46kV SUBSTATION #5
STEEL SWITCH PLATFORM DETAIL

Drawn By: JSI	Date 7/30/99	ENGR. SNH	Date 7/30/99	DRAWING No.	REVISION
Chk'd. By:	Date	APPD.	Date	S005	3
Project No. 13-043	SCALE NOT TO SCALE				

LH5-S005.dwg jsi 10/05/99 10:29 PR ENGR: CVW

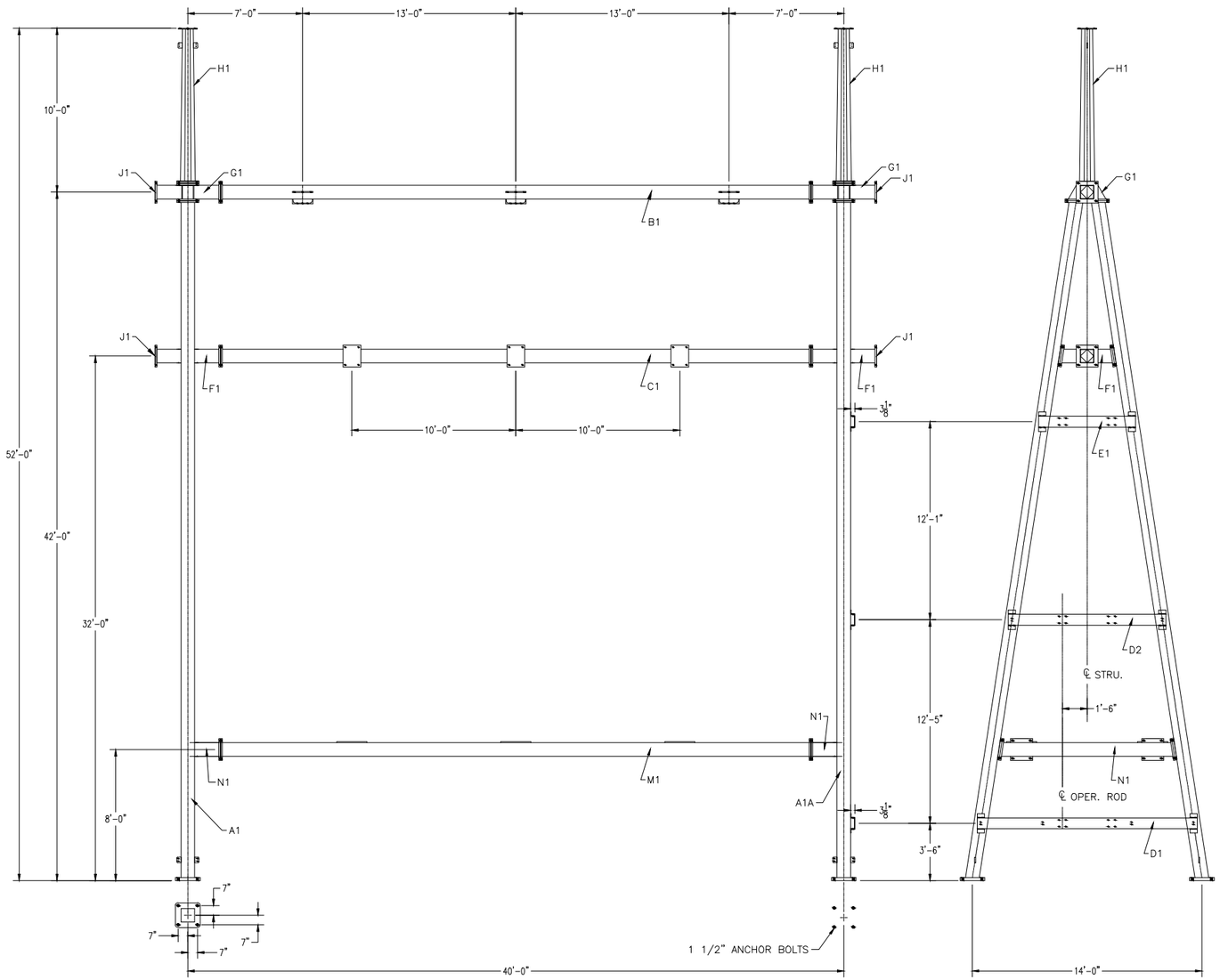

ELEVATION VIEW

SIDE VIEW

BILL OF MATERIAL

QTY	MARK	DESCRIPTION	WEIGHT
2	A13-A1	COLUMN LEG	3,494.8
1	A13-A1A	COLUMN LEG W/ BRACKETS	1,760.3
1	A13-RA1A	COLUMN LEG W/ BRACKETS	1,760.3
1	A13-B1	PULL OFF BEAM	1,657.2
1	A13-C1	SWITCH BEAM	1,702.2
1	A13-D1	CHANNEL SUPPORT	154.2
1	A13-D2	CHANNEL SUPPORT	110.5
1	A13-E1	CHANNEL SUPPORT	68.0
2	A13-F1	BRACE	1,120.5
2	A13-G1	CONNECTION	1,330.4
2	A13-H1	GROUND MAST	633.5
4	A13-J1	END COVER	54.5
2	A13-M1	EQUIPMENT BEAM	5,131.8
2	A13-N1	EQUIPMENT BEAM CONNECTION	3,463.2
1	A13-K1	HARDWARE KIT	194.0
		TOTAL BLACK STEEL WEIGHT	22,613.3
		TOTAL WEIGHT OF GALVANIZING (3.5%)	791.5
		TOTAL GALVANIZED WEIGHT	23,404.8

NOTES:

1. ALL HOLES AS NOTED.
2. ALL MATERIAL HOT DIP GALVANIZED PER A.S.T.M. A123.
3. ALL MATERIAL AS NOTED.
4. ALL WELDING TO MEET OR EXCEED AWS D1.1. AND BE PERFORMED BY AWS CERTIFIED WELDERS.

PRINTED 06/25/14 FOR
DATE

- ☐ PRELIMINARY
- ☐ DESIGN DEVELOPMENT
- ☒ BIDDING
- ☐ CONSTRUCTION
- ☐ APPROVAL
- ☐ AS BUILT
- ☐ REVISION

SALIENT Power Engineering LLC
303-358-2525 | www.salientpower.com

No.	DESCRIPTION	BY	DATE	APPD.
A	138kV CONVERSION IFB	JLF	06/25/14	CWM

REVISIONS

BID DRAWING ONLY

TITLE

LEHI

138kV-12.47kV SUBSTATION #5
138kV DEAD-END ERECTION DETAILS

Drawn By: JLF	Date 06/25/14	ENGR.	Date	DRAWING No.	REVISION
Chk'd. By:	Date	APPD.	Date	S006	A
Project No.	SCALE 1/4" = 1'-0"				

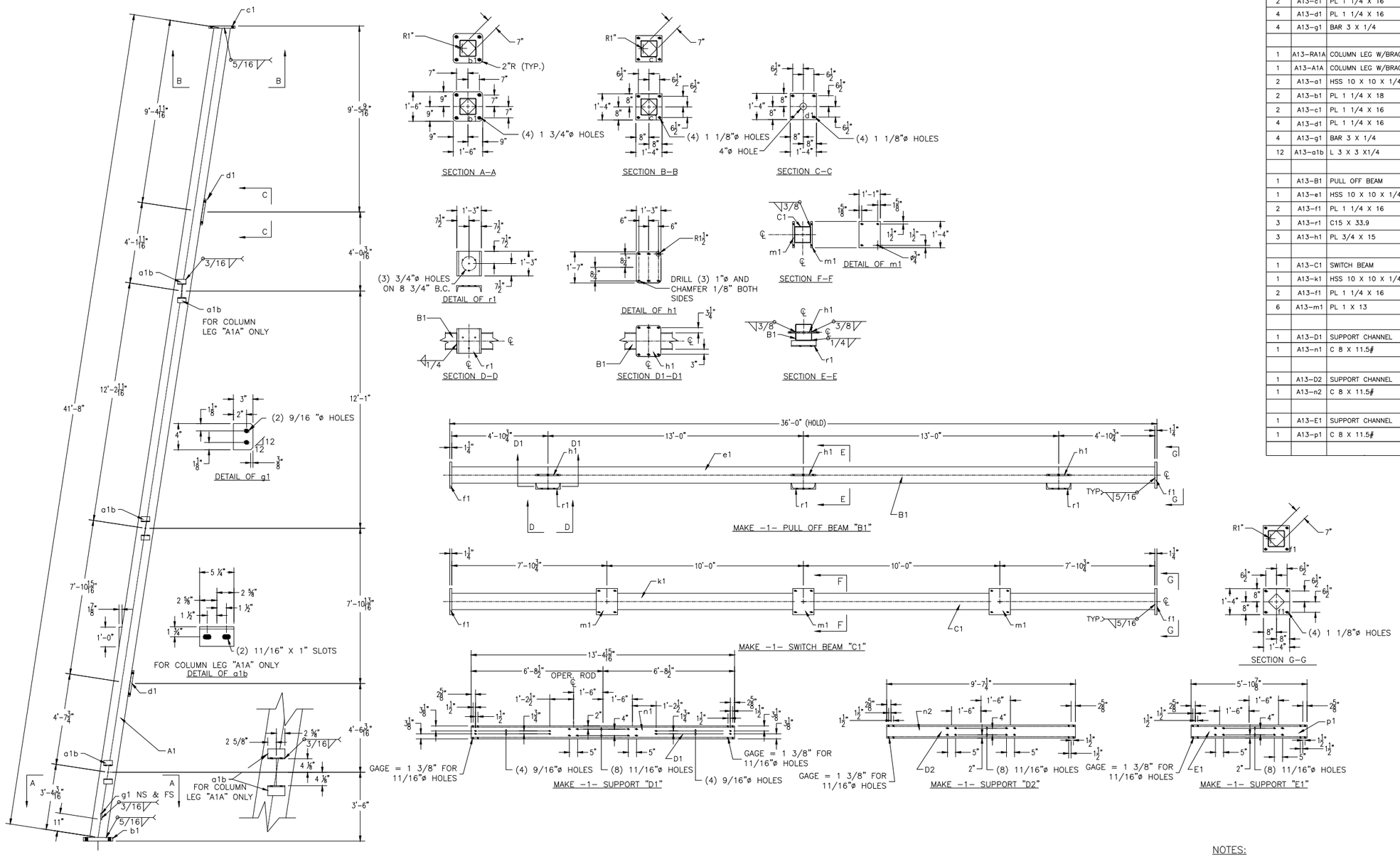

BILL OF MATERIAL

QTY	MARK	DESCRIPTION	LENGTH FT.	LENGTH INCHES	UNIT WEIGHT	TOTAL WEIGHT
2	A13–A1	COLUMN LEG				
2	A13–a1	HSS 10 X 10 X 1/4 (BEVEL CUT)	41	8	32.60#/FT	2705.8
2	A13–b1	PL 1 1/4 X 18	1	6	51.04#/SQ. FT	229.7
2	A13–c1	PL 1 1/4 X 16	1	4	51.04#/SQ. FT	181.5
4	A13–d1	PL 1 1/4 X 16	1	4	51.04#/SQ. FT	363.0
4	A13–g1	BAR 3 X 1/4	0	4	2.55#/FT	3.4
			BLACK STEEL WEIGHT			3483.4
1	A13–RA1A	COLUMN LEG W/BRACKETS				
1	A13–A1A	COLUMN LEG W/BRACKETS				
2	A13–a1	HSS 10 X 10 X 1/4 (BEVEL CUT)	41	8	32.60#/FT	2705.8
2	A13–b1	PL 1 1/4 X 18	1	6	51.04#/SQ. FT	229.7
2	A13–c1	PL 1 1/4 X 16	1	4	51.04#/SQ. FT	181.5
4	A13–d1	PL 1 1/4 X 16	1	4	51.04#/SQ. FT	363.0
4	A13–g1	BAR 3 X 1/4	0	4	2.55#/FT	3.4
12	A13–a1b	L 3 X 3 X1/4	0	5 1/4	4.9#/FT	27.5
			BLACK STEEL WEIGHT			3510.9
1	A13–B1	PULL OFF BEAM				
1	A13–e1	HSS 10 X 10 X 1/4	35	9 1/2	32.60#/FT	1166.8
2	A13–f1	PL 1 1/4 X 16	1	4	51.04 #/SQ. FT	181.5
3	A13–r1	C15 X 33.9	1	3	33.9#/FT	127.1
3	A13–h1	PL 3/4 X 15	1	7	30.63#/SQ. FT	181.8
			BLACK STEEL WEIGHT			1657.2
1	A13–C1	SWITCH BEAM				
1	A13–k1	HSS 10 X 10 X 1/4	35	9 1/2	32.60#/FT	1166.8
2	A13–f1	PL 1 1/4 X 16	1	4	51.04#/SQ. FT	181.5
6	A13–m1	PL 1 X 13	1	4	40.84#/SQ. FT	353.9
			BLACK STEEL WEIGHT			1702.2
1	A13–D1	SUPPORT CHANNEL				
1	A13–n1	C 8 X 11.5#	13	4 15/16	11.5#/FT	154.2
			BLACK STEEL WEIGHT			154.2
1	A13–D2	SUPPORT CHANNEL				
1	A13–n2	C 8 X 11.5#	9	7 1/4	11.5#/FT	105.6
			BLACK STEEL WEIGHT			105.6
1	A13–E1	SUPPORT CHANNEL				
1	A13–p1	C 8 X 11.5#	5	10 7/8	11.5#/FT	68.0
			BLACK STEEL WEIGHT			68.0

NOTES:

1. ALL HOLES AS NOTED.
2. ALL MATERIAL HOT DIP GALVANIZED PER A.S.T.M. A123.
3. ALL MATERIAL AS NOTED.
4. ALL WELDING TO MEET OR EXCEED AWS D1.1. AND BE PERFORMED BY AWS CERTIFIED WELDERS.

PRINTED 06/25/14 FOR
DATE

- ☐ PRELIMINARY
- ☐ DESIGN DEVELOPMENT
- ☒ BIDDING
- ☐ CONSTRUCTION
- ☐ APPROVAL
- ☐ AS BUILT
- ☐ REVISION

SALIENT Power Engineering LLC
303-358-2525 | www.salientpower.com

No.	DESCRIPTION	BY	DATE	APPD.
A	138kV CONVERSION IFB	JLF	06/25/14	CWM

REVISIONS

BID DRAWING ONLY

TITLE
LEHI
138kV–12kV SUBSTATION #5
138kV DEAD–END STEEL DETAILS

Drawn By: JLF	Date 06/25/14	ENGR.	Date	DRAWING No. S007
Chk'd. By:	Date	APPD.	Date	REVISION A
Project No.	SCALE 3/8" = 1'–0"			

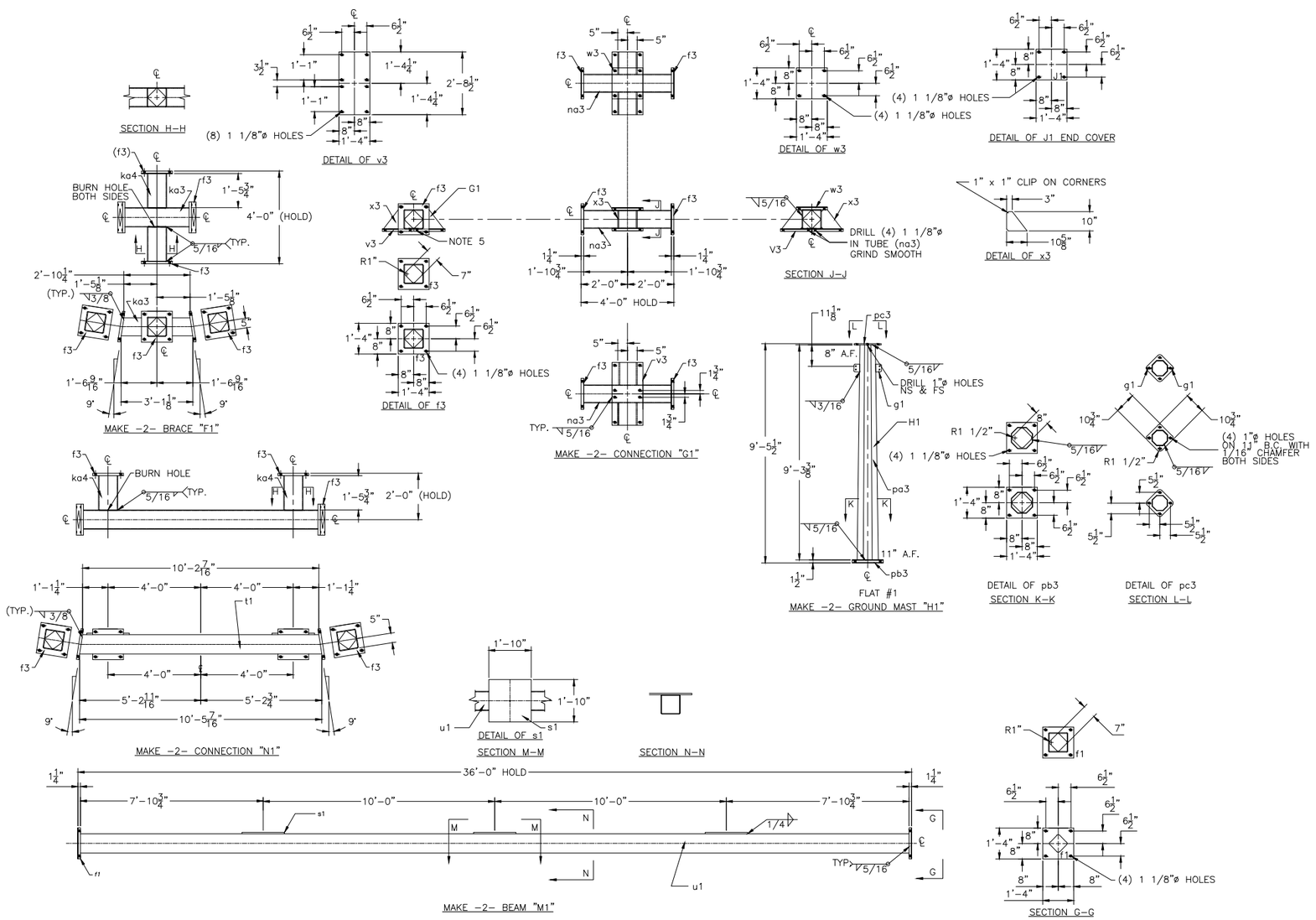

BILL OF MATERIAL

QTY	MARK	DESCRIPTION	LENGTH FT.	LENGTH INCHES	UNIT WEIGHT	TOTAL WEIGHT
2	A13-F1	BRACE				
2	A13-ka3	HSS 10 X 10 X 1/4 (BEVEL CUT)	3	1 1/8	32.60#/FT	201.7
4	A13-ka4	HSS 10 X 10 X 1/4	1	5 3/4	32.60#/FT	192.9
8	A13-f3	PL 1 1/4 X 16	1	4	51.04#/SQ. FT	725.9
		BLACK STEEL WEIGHT				1120.5
2	A13-G1	CONNECTION				
2	A13-na3	HSS 10 X 10 X 1/4	3	9 1/2	32.60#/FT	247.2
2	A13-v3	PL 1 1/4 X 16	2	8 1/2	51.04#/SQ. FT	368.6
2	A13-w3	PL 1 1/2 X 16	1	4	61.25#/SQ. FT	217.8
8	A13-x3	PL 9/16 X 10	0	10 5/8	22.97#/SQ. FT	135.6
4	A13-f3	PL 1 1/4 X 16	1	4	51.04#/SQ. FT	361.2
		BLACK STEEL WEIGHT				1330.4
2	A13-H1	GROUND MAST				
2	A13-pa3	OCT. 11" AF X 8" AF X 3/16	9	3 5/8		373.0
2	A13-pb3	PL 1 1/2 X 16	1	4	61.25#/SQ. FT	217.8
2	A13-pc3	PL 5/8 X 10 3/4	0	10 3/4	25.52#/SQ. FT	41.0
2	A13-g1	BAR 3 X 1/4	0	4	2.55#/FT	1.7
		BLACK STEEL WEIGHT				633.5
2	A13-M1	EQUIPMENT BEAM				
2	A13-u1	HSS 10 X 10 X 1/2	35	9 1/2	62.33#/FT	4461.8
4	A13-f3	PL 1 1/4 X 16	1	4	51.04#/SQ. FT	361.2
3	A13-s1	PL 3/4 X 22	1	10	30.63#/FT	308.8
		BLACK STEEL WEIGHT				5131.8
2	A13-N1	EQUIPMENT BEAM CONNECTION				
2	A13-t1	HSS 10 X 10 X 1/4	10	5 7/16	32.60#/FT	2544.4
4	A13-ka4	HSS 10 X 10 X 1/4	1	5 3/4	32.60#/FT	192.9
8	A13-f3	PL 1 1/4 X 16	1	4	51.04#/SQ. FT	725.9
		BLACK STEEL WEIGHT				3463.2
1	A13-J1	END COVER				
4	A13-j1	PL 3/16 X 16	1	4	7.6#/SQ. FT	54.5
		BLACK STEEL WEIGHT				54.5
1	A13-K1	HARDWARE KIT (ALL HARDWARE TO BE GALVANIZED)				
88	A13-hk1	1" DIA. X 4" LG A325 TYPE 1, HEAVEY HEX HEAD				
10	A13-hk1	1" DIA. X 4 1/2" LG A325 TYPE 1, HEAVEY HEX HEAD				
98	A13-hk1	1" DIA. A563HD NUT				
98	A13-hk1	1" DIA. LOCK WASHER				
196	A13-hk1	1" DIA. F436 STANDARD FLAT WASHER				

NOTES:

1. ALL HOLES AS NOTED.
2. ALL MATERIAL HOT DIP GALVANIZED PER A.S.T.M. A123.
3. ALL MATERIAL AS NOTED.
4. ALL WELDING TO MEET OR EXCEED AWS D1.1. AND BE PERFORMED BY AWS CERTIFIED WELDERS.

PRINTED 06/25/14 FOR
DATE

- ☐ PRELIMINARY
- ☐ DESIGN DEVELOPMENT
- ☒ BIDDING
- ☐ CONSTRUCTION
- ☐ APPROVAL
- ☐ AS BUILT
- ☐ REVISION

SALIENT Power Engineering LLC
303-358-2525 | www.salientpower.com

No.	DESCRIPTION	BY	DATE	APPD.
A	138kV CONVERSION IFB	JLF	06/25/14	CWM

REVISIONS

BID DRAWING ONLY

TITLE
LEHI
138kV-12kV SUBSTATION #5
138kV DEAD-END STEEL DETAILS

Drawn By: JLF	Date 06/25/14	ENGR.	Date	DRAWING No.	REVISION
Chk'd. By:	Date	APPD.	Date	S008	A
Project No.	SCALE 3/8" = 1'-0"				

BILL OF MATERIAL

QTY	MARK	DESCRIPTION	LENGTH FT.	LENGTH INS.	UNIT WEIGHT	TOTAL WEIGHT
(ONE) COLUMN ASSEMBLY MARK C2						
1	A56-C1	TS 8" X 8" X 3/16"	10	8	19.61 LBS/FT	210.0
1	A56-a	PL 1 1/4" X 18"	1	6		114.9
2	A56-b	PL 1/2" X 3"		4		3.4
1	A56-f	PL 1/4" x 9"	0	9		5.7
1	A56-g	MC8x21.4	0	8	21.4/FT	14.3
TOTAL BLACK STEEL WEIGHT						348.3
TOTAL GALVANIZED WEIGHT OF 1 STEEL STRUCTURE						360.5

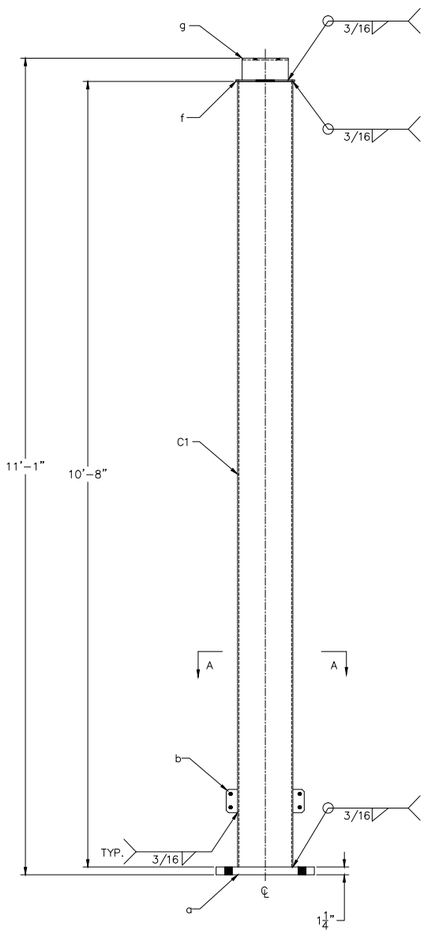

ELEVATION VIEW

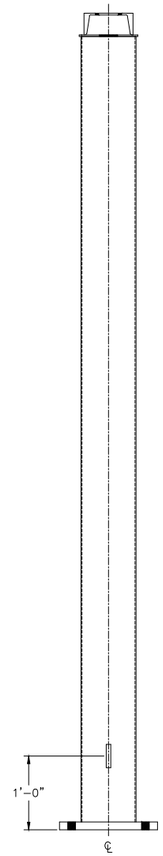

SIDE VIEW

PLAN VIEW

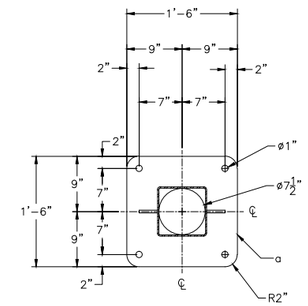

SECTION A-A

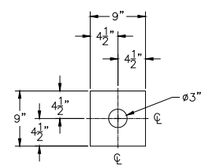

DETAIL f

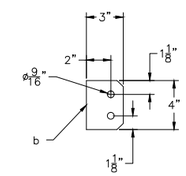

DETAIL b

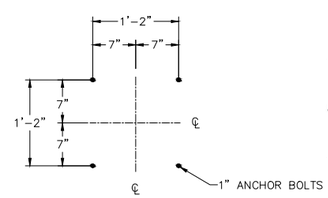

ANCHOR BOLT PLAN

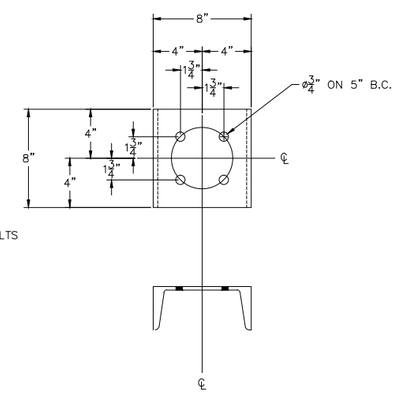

DETAIL g

NOTES:

1. ALL HOLES AS NOTED.
2. ALL MATERIAL HOT DIP GALVANIZED PER A.S.T.M. A123.
3. ALL MATERIAL AS NOTED.
4. ALL WELDING TO MEET OR EXCEED AWS D1.1. AND BE PERFORMED BY AWS CERTIFIED WELDERS.

PRINTED 06/25/14 FOR
DATE

- ☐ PRELIMINARY
- ☐ DESIGN DEVELOPMENT
- ☒ BIDDING
- ☐ CONSTRUCTION
- ☐ APPROVAL
- ☐ AS BUILT
- ☐ REVISION

SALIENT Power Engineering LLC
303-358-2525 | www.salientpower.com

No.	DESCRIPTION	BY	DATE	APPD.
A	138kV CONVERSION IFB	JLF	06/25/14	CWM

REVISIONS

BID DRAWING ONLY

TITLE
LEHI
138kV-12.47kV SUBSTATION #5
138kV LOW BUS SUPPORT STEEL DETAILS

Drawn By: JLF	Date 06/25/14	ENGR.	Date	DRAWING No.	REVISION
Chk'd. By:	Date	APPD.	Date	S009	A
Project No.	SCALE 1" = 1'-0"				

BILL OF MATERIAL

QTY	MARK	DESCRIPTION	LENGTH FT.	LENGTH INS.	REMARKS	WEIGHT
2	B1	HSS 10" X 10 X 5/16"	18	0	BEAM ASS'Y	2060.8
2	B2	HSS 10" X 10 X 5/16"	9	8	BEAM ASS'Y	1377.0
2	C1	HSS 10" X 10 X 5/16"	8	1 3/8	COLUMN ASS'Y	1158.2
	FIELD BOLTS					
24	1" X 4" HEAVY HEX. BOLT, HEAVY HEX NUT AND PLAIN ROUND WASHER					49.7
24	1" HEX. LOCKNUT MF TYPE					5.2
	TOTAL GALVANIZED WEIGHT OF (1) STEEL STRUCTURE					4650.9

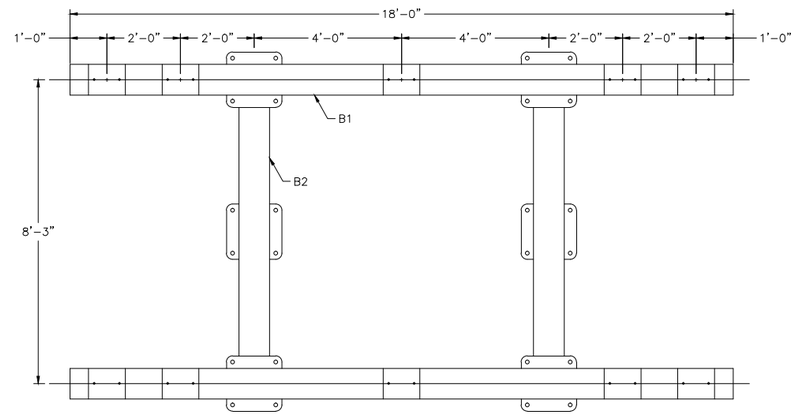

PLAN VIEW

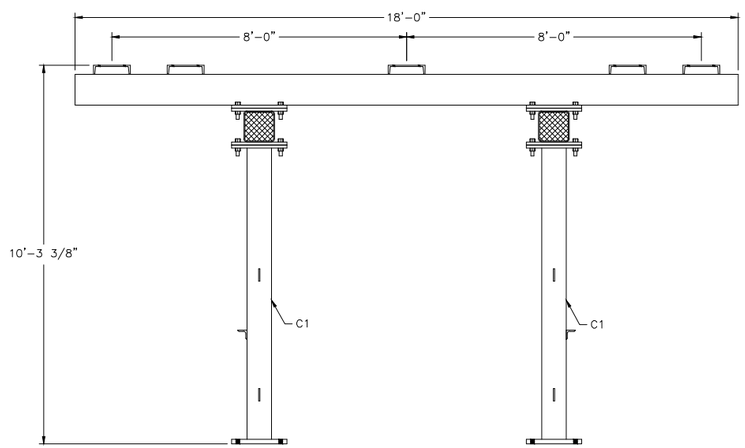

ELEVATION VIEW

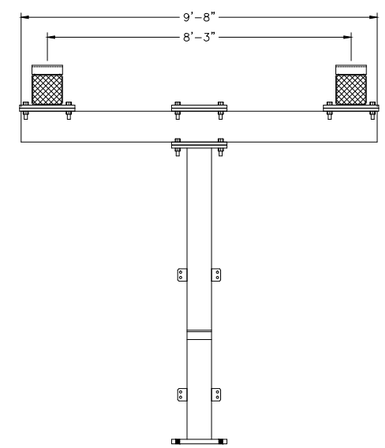

END VIEW

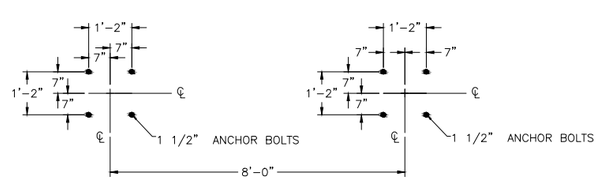

ANCHOR BOLT PLAN

NOTES:

1. ALL HOLES AS NOTED.
2. ALL MATERIAL HOT DIP GALVANIZED PER A.S.T.M. A123.
3. ALL MATERIAL AS NOTED.
4. ALL WELDING TO MEET OR EXCEED AWS D1.1. AND BE PERFORMED BY AWS CERTIFIED WELDERS.

PRINTED 06/25/14 FOR
DATE

- ☐ PRELIMINARY
- ☐ DESIGN DEVELOPMENT
- ☒ BIDDING
- ☐ CONSTRUCTION
- ☐ APPROVAL
- ☐ AS BUILT
- ☐ REVISION

SALIENT Power Engineering LLC
303-358-2525 | www.salientpower.com

No.	DESCRIPTION	BY	DATE	APPD.
A	138kV CONVERSION IFB	JLF	06/25/14	CWM

REVISIONS

BID DRAWING ONLY

TITLE
LEHI
138kV-12.47kV SUBSTATION #5
138kV LOW SWITCH STAND ERECTION DETAILS

Drawn By: JLF	Date 06/25/14	ENGR.	Date	DRAWING No.	REVISION
Chk'd. By:	Date	APPD.	Date	S010	A
Project No.	SCALE 1/2" = 1'-0"				

BILL OF MATERIAL						
ITEM NO.	QTY.	DESCRIPTION	LENGTH FEET	LENGTH INCHES	UNIT WEIGHT	TOTAL WEIGHT
(ONE) BEAM ASSEMBLY – B1						
B1a	1	HSS 10" X 10" X 5/16"	18	0	40.30# / FT.	725.4
B1b	2	PL 1" X 18"	1	6		183.8
B1c	5	C12 X 20.7	0	10	20.7# / FT.	86.3
TOTAL BLACK STEEL WEIGHT						995.5
TOTAL GALVANIZED STEEL WEIGHT						1030.4
(ONE) BEAM ASSEMBLY – B2						
B2a	1	HSS 10" X 10" X 5/16"	9	8	40.30# / FT.	389.6
B1b	3	PL 1" X 18"	1	6		275.6
TOTAL BLACK STEEL WEIGHT						665.2
TOTAL GALVANIZED STEEL WEIGHT						688.5
(ONE) COLUMN ASSEMBLY – C1						
C1a	1	HSS 10" X 10" X 5/16"	7	10 7/8	40.30# / FT.	318.6
C1b	1	PL 1 1/2" X 18"	1	6		137.9
C1c	4	PL 3/8" X 3"	0	4		5.1
C1d	1	PL 1" X 18"	1	6		91.9
C1e	1	L 3 X 3 X 3/8"	0	10	7.2# / FT.	6.0
TOTAL BLACK STEEL WEIGHT						559.5
TOTAL GALVANIZED STEEL WEIGHT						579.1

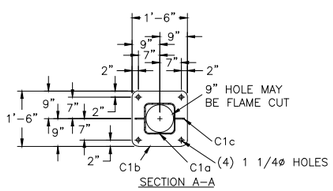

SECTION A–A

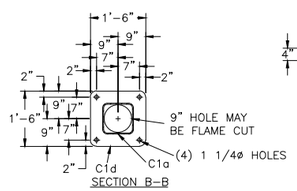

SECTION B–B

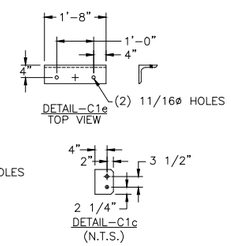

DETAIL–C1e TOP VIEW

DETAIL–C1c (N.T.S.)

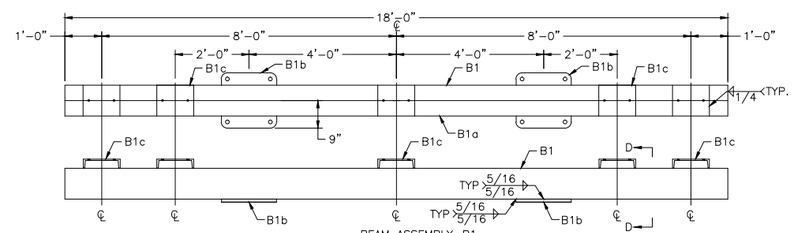

BEAM ASSEMBLY–B1

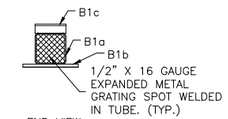

END VIEW

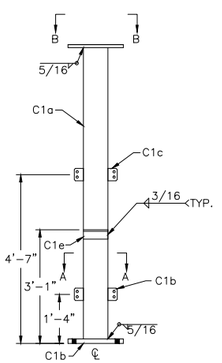

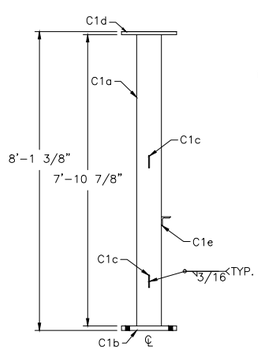

COLUMN ASSEMBLIES–C1 & C2

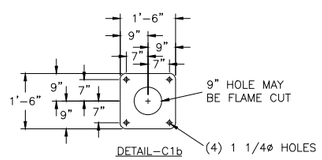

DETAIL–C1b

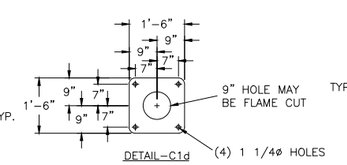

DETAIL–C1d

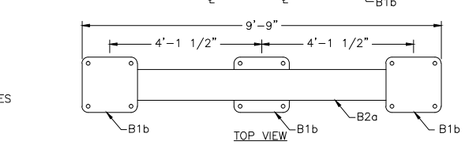

TOP VIEW

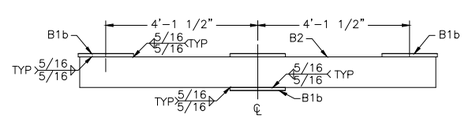

FRONT VIEW SIDE SWITCH BEAM ASSEMBLY B2

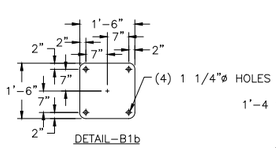

DETAIL–B1b

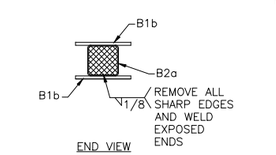

END VIEW

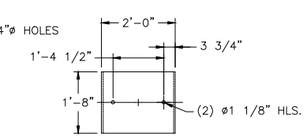

B1c, DETAIL B (N.T.S)

NOTES:

1. ALL HOLES AS NOTED.
2. ALL MATERIAL HOT DIP GALVANIZED PER A.S.T.M. A123.
3. ALL MATERIAL AS NOTED.
4. ALL WELDING TO MEET OR EXCEED AWS D1.1. AND BE PERFORMED BY AWS CERTIFIED WELDERS.

PRINTED 06/25/14 FOR
DATE

- ☐ PRELIMINARY
- ☐ DESIGN DEVELOPMENT
- ☒ BIDDING
- ☐ CONSTRUCTION
- ☐ APPROVAL
- ☐ AS BUILT
- ☐ REVISION

SALIENT Power Engineering LLC
303-358-2525 | www.salientpower.com

No.	DESCRIPTION	BY	DATE	APPD.
A	138kV CONVERSION IFB	JLF	06/25/14	CWM

REVISIONS

BID DRAWING ONLY

TITLE
LEHI
138kV–12.47kV SUBSTATION #5
138kV LOW SWITCH STAND STEEL DETAILS

Drawn By: JLF	Date 06/25/14	ENGR.	Date	DRAWING No.	REVISION
Chk'd. By:	Date	APPD.	Date	S011	A
Project No.	SCALE 1/2" = 1'-0"				

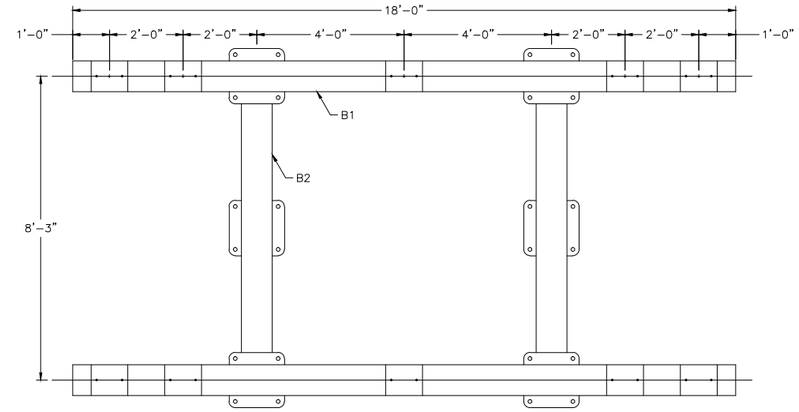

PLAN VIEW

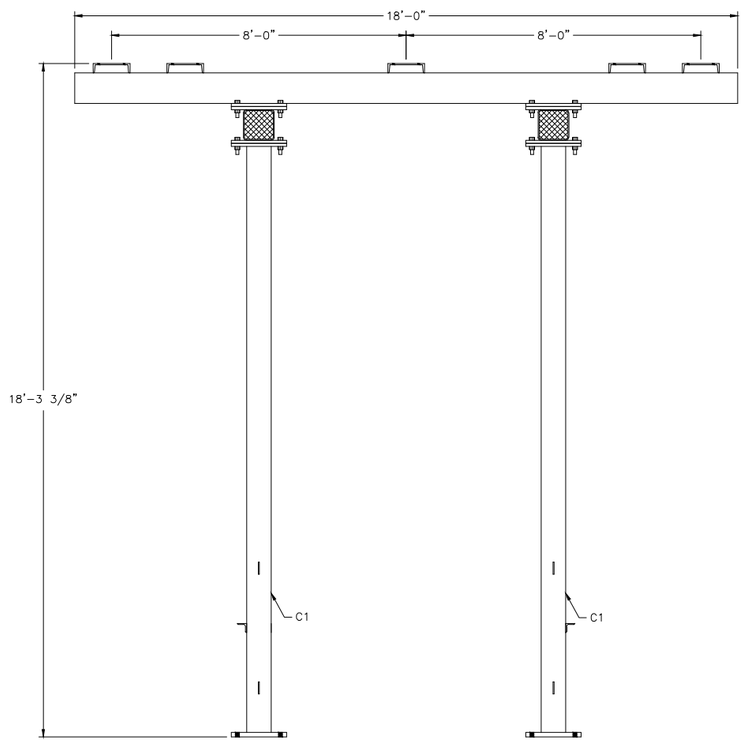

ELEVATION VIEW

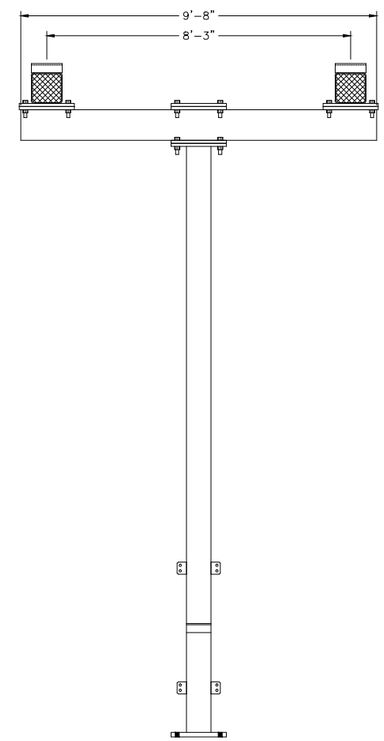

END VIEW

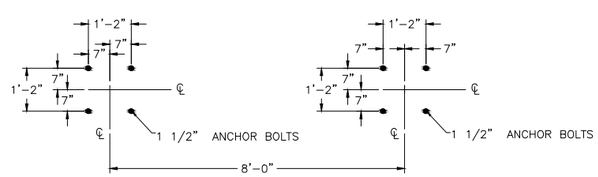

ANCHOR BOLT PLAN

BILL OF MATERIAL

QTY	MARK	DESCRIPTION	LENGTH FT.	LENGTH INS.	REMARKS	WEIGHT
2	B1	HSS 10" X 10 X 5/16"	18	0	BEAM ASS'Y	2060.8
2	B2	HSS 10" X 10 X 5/16"	9	8	BEAM ASS'Y	1377.0
2	C1	HSS 10" X 10 X 5/16"	8	1 3/8	COLUMN ASS'Y	1825.5
	FIELD BOLTS					
24	1" X 4" HEAVY HEX. BOLT, HEAVY HEX NUT AND PLAIN ROUND WASHER					49.7
24	1" HEX. LOCKNUT MF TYPE					5.2
					TOTAL GALVANIZED WEIGHT OF (1) STEEL STRUCTURE	5318.2

NOTES:

1. ALL HOLES AS NOTED.
2. ALL MATERIAL HOT DIP GALVANIZED PER A.S.T.M. A123.
3. ALL MATERIAL AS NOTED.
4. ALL WELDING TO MEET OR EXCEED AWS D1.1. AND BE PERFORMED BY AWS CERTIFIED WELDERS.

PRINTED 06/25/14 FOR
DATE

- ☐ PRELIMINARY
- ☐ DESIGN DEVELOPMENT
- ☒ BIDDING
- ☐ CONSTRUCTION
- ☐ APPROVAL
- ☐ AS BUILT
- ☐ REVISION

SALIENT Power Engineering LLC
303-358-2525 | www.salientpower.com

No.	DESCRIPTION	BY	DATE	APPD.
A	138kV CONVERSION IFB	JLF	06/25/14	CWM

REVISIONS

BID DRAWING ONLY

TITLE
LEHI
138kV–12.47kV SUBSTATION #5
138kV HIGH SWITCH STAND ERECTION DETAILS

Drawn By: JLF	Date 06/25/14	ENGR.	Date	DRAWING No. S012	REVISION A
Chk'd. By:	Date	APPD.	Date		
Project No.	SCALE 1/2" = 1'-0"				

BILL OF MATERIAL						
ITEM NO.	QTY.	DESCRIPTION	LENGTH FEET	LENGTH INCHES	UNIT WEIGHT	TOTAL WEIGHT
(ONE) BEAM ASSEMBLY – B1						
B1a	1	HSS 10" X 10" X 5/16"	18	0	40.30# / FT.	725.4
B1b	2	PL 1" X 18"	1	6		183.8
B1c	5	C12 X 20.7	0	10	20.7# / FT.	86.3
TOTAL BLACK STEEL WEIGHT						995.5
TOTAL GALVANIZED STEEL WEIGHT						1030.4
(ONE) BEAM ASSEMBLY – B2						
B2a	1	HSS 10" X 10" X 5/16"	9	8	40.30# / FT.	389.6
B1b	3	PL 1" X 18"	1	6		275.6
TOTAL BLACK STEEL WEIGHT						665.2
TOTAL GALVANIZED STEEL WEIGHT						688.5
(ONE) COLUMN ASSEMBLY – C1						
C1a	1	HSS 10" X 10" X 5/16"	15	10 7/8	40.30# / FT.	641.0
C1b	1	PL 1 1/2" X 18"	1	6		137.9
C1c	4	PL 3/8" X 3"	0	4		5.1
C1d	1	PL 1" X 18"	1	6		91.9
C1e	1	L 3 X 3 X 3/8"	0	10	7.2# / FT.	6.0
TOTAL BLACK STEEL WEIGHT						881.9
TOTAL GALVANIZED STEEL WEIGHT						912.8

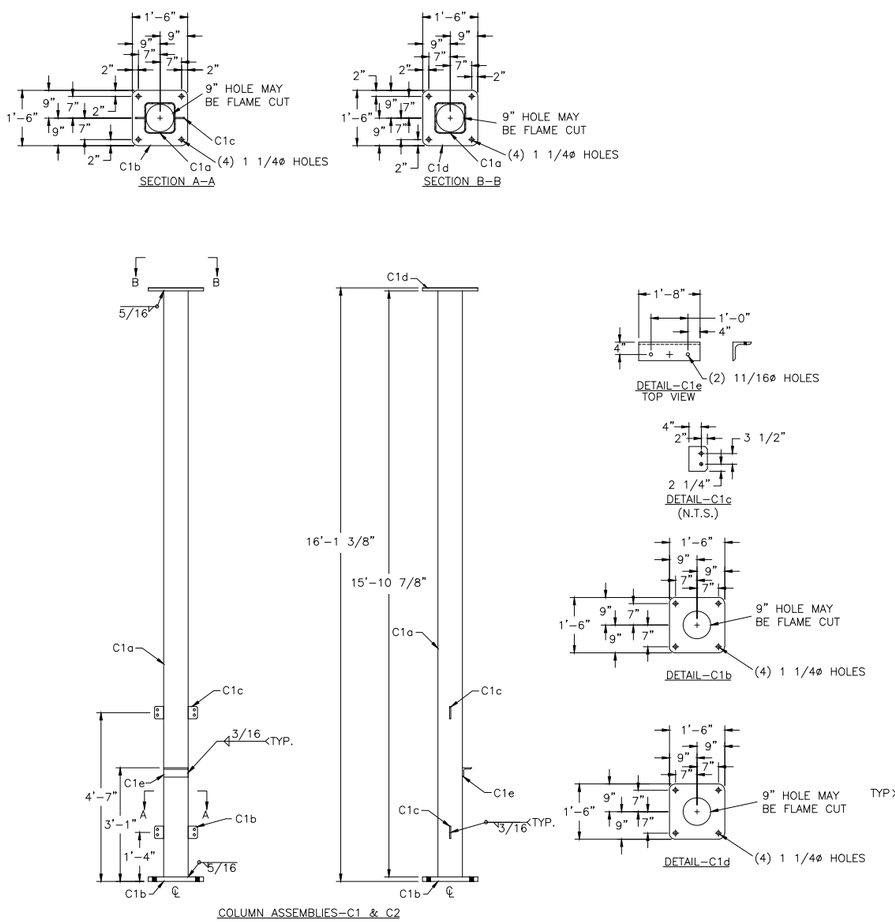

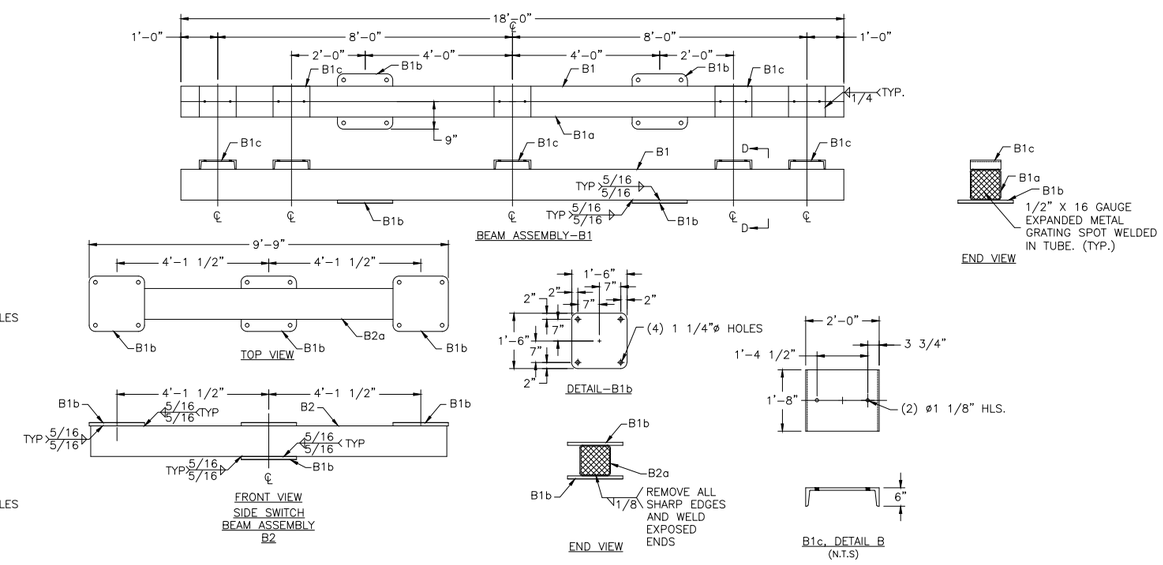

NOTES:

1. ALL HOLES AS NOTED.
2. ALL MATERIAL HOT DIP GALVANIZED PER A.S.T.M. A123.
3. ALL MATERIAL AS NOTED.
4. ALL WELDING TO MEET OR EXCEED AWS D1.1. AND BE PERFORMED BY AWS CERTIFIED WELDERS.

PRINTED 06/25/14 FOR
DATE

- ☐ PRELIMINARY
- ☐ DESIGN DEVELOPMENT
- ☒ BIDDING
- ☐ CONSTRUCTION
- ☐ APPROVAL
- ☐ AS BUILT
- ☐ REVISION

SALIENT Power Engineering LLC
303-358-2525 | www.salientpower.com

No.	DESCRIPTION	BY	DATE	APPD.
A	138kV CONVERSION IFB	JLF	06/25/14	CWM

REVISIONS

BID DRAWING ONLY

TITLE
LEHI
138kV–12.47kV SUBSTATION #5
138kV HIGH SWITCH STAND STEEL DETAILS

Drawn By: JLF	Date 06/25/14	ENGR.	Date	DRAWING No.	REVISION
Chk'd. By:	Date	APPD.	Date	S013	A
Project No.	SCALE 1/2" = 1'-0"				